Water and Sewer Utility Design Standards
Table of Contents

Chapter 4

4.1 Introduction

(4.1.1) Water and Sanitary Sewer Project Phases

4.2 Inter-Agency and Inter-Jurisdictional Approvals

(4.2.1) Water System
(4.2.2) Sewer System
(4.2.3) Sewer Pretreatment
(4.2.4) Local Code Compliance

4.3 Requirements for Preliminary and Final Engineering Reports

(4.3.0) Preliminary Engineering Report
(4.3.1) Variances
(4.3.2) Grading and Structural
(4.3.3) Demand Calculations
(4.3.4) Peak Factors and Fire Flows
(4.3.5) Water System Hydraulic Design
(4.3.6) Sewer System Hydraulic Design
(4.3.7) Easements
(4.3.8) Construction Cost Estimate

4.4 Design Criteria and Plan View Requirements for Construction Drawings:
Water and Sewer Main Extensions

(4.4.1) Horizontal locations of water and sewer mains within public right-of-way:
(4.4.2) Horizontal locations of water and sewer mains on private property:
(4.4.3) Horizontal locations of water and sewer mains in proximity to utilities:
(4.4.4) Fire Hydrants
(4.4.5) Valves
(4.4.6) Air/Vacuum Valves and Blow-Off Assemblies
(4.4.7) Fittings and Deflections
(4.4.8) Manholes for Sanitary Sewers
(4.4.9) Water and Sewer Service Connections

(4.4.10) Hydrostatic and Bacteriological Testing Schedule for Water Mains
(4.4.11) Special Condition Water and Sewer Main Design

4.5 Design Criteria and Profile Requirements for Construction Drawings: Water and Sewer Main Extensions

(4.5.1) Cover Depth of Water Mains
(4.5.2) Conflicts with Utilities
(4.5.3) Water and Sewer Main In Parallel
(4.5.4) Water and Sewer Main Crossings
(4.5.5) Construction Drawing Profile View

4.6 Pumping Design for Water Distribution and Sewerage Transmission

(4.6.1) Inter-Agency Approval
(4.6.2) Criteria For Configuration
(4.6.3) Design
(4.6.4) Requirements for Presentation in Construction Drawings
(4.6.5) Requirements for Construction Specifications
(4.6.6) Submittals Prior to Construction of Sanitary Sewer Pump Stations
(4.6.7) Final Inspections
(4.6.8) Facility Acceptance

Chapter 4
Water and Sewer Utility Design Standards

4.1 Introduction

This Chapter of the Manual provides the designer with a summary of information necessary to obtain site plan approval to construct water and/or sanitary sewer facilities within the City of Harrisonburg, VA. The information as required has been modeled from the latest publications of the Commonwealth of Virginia Department of Health (VDH) Waterworks Regulations, and the Department of Environmental Quality (DEQ) Sewage Collection And Treatment (SCAT) Regulations. Additional specifications derived of policy issued by the City of Harrisonburg have been included to establish an adopted local review program.

(4.1.1) Water and Sanitary Sewer Project Phases: Appendix E of this manual includes flow diagram templates to assist the developer in his progression through typical phases of water and sanitary sewer projects.

4.2 Inter-Agency and Inter-Jurisdictional Approvals

Extensions of water or sewer mains require site plan approval by the City of Harrisonburg. The following facilities, however, require other approvals in addition to City approval:

(4.2.1) Water: Transmission Mains Greater than 12", Pumping, Storage and/or Treatment: requires Virginia Department of Health approval (See Appendix I) (4.2.2) Sanitary Sewerage Collection Systems, Pumping and/or Treatment: The developer must meet all requirements of The Virginia Department of Environmental Quality (VDEQ) Sewage Collection and Treatment Regulations. The developer must obtain a VDEQ "Certificate to Construct" prior to construction. Upon completion of construction and as a condition for "Substantial Completion" the Developer must provide the City his "Certificate to Operate" issued from VDEQ.
(4.2.3) Sewer Pretreatment: requires Harrisonburg-Rockingham Regional Sewer Authority approval.

(4.2.4) Local Code Compliance: Building, plumbing, and electrical components shall require approval from the City Building Inspection office.

4.3 Requirements for Preliminary and Final Engineering Reports

Appendix C of this Manual contains the engineering report format, which shall accompany all site plan submissions for extensions of water or sewer mains. The following narratives provide clarification to the designer for addressing the preliminary engineering report and all items within the final engineering report:

(4.3.0) **Preliminary Engineering Report:** An approved Preliminary Engineering Report (PER) is required for each development prior to proceeding with the site plan submission process. The PER shall address the capacity in both the water and sanitary sewer systems. Specifically, the PER shall include the following:

A. Introduction to the project
B. Calculation of Average Daily Demands (See 4.3.3)
C. Calculation of Water Design Demand; including Needed Fire Flow (See 4.3.4)
D. Calculation of Sewer Design Demand (See 4.3.4)
E. Evaluation of the water system capacity to deliver the design demand (See 4.3.5)
F. Evaluation of the sewer system capacity (on and off site) to transport the design demand (See 4.3.6). Scope and extent of downstream analysis to be determined by the Director on a case by case basis.
G. Maps and preliminary design drawings showing sufficient information to confirm the data used in the water and sewer evaluations.
H. Conclusion

Final Engineering Report:

(4.3.1) Item 1: Variances

The designer shall identify all requests for variances as pertains to the design and the construction of the water and/or sanitary sewer main extensions. A variance may be denied during construction if it has not been identified in the engineering report and subsequently denoted as being approved on the drawings cover sheet. Plan revisions after approval may be allowed, however, significant construction delays may be incurred.

(4.3.2) Item 2: Grading and Structural

Any relocation of **existing** water or sewer mains or services due to development shall be provided for by the developer and approved by the Director. The Director shall establish the procedures, and the developer shall pay cost incurred to the City or others.

The designer shall identify any impact upon **existing** water and sewer utilities resulting from construction of the project. This shall specifically target grading activities, which will result in a change of cover depth above buried utilities or will result in increased direct loadings placed upon the utility during construction or after construction. Impacts identified shall be remediated to comply with this manual, at the developer's expense, including but not limited to the replacement and/or relocation of existing pipes with appropriate pipe materials, grades, and depth of cover. If access to an existing utility is affected, the impact shall be defined and reasonable access alternatives shall be proposed for the City's evaluation. Designs shall provide access in compliance with this manual for all existing utilities. Typically proposed access designs shall be equal to original conditions or an improved scenario. In all cases above a narrative description shall be provided by the designer.

Where water and sewer mains are proposed a minimum ten-foot wide travel-way shall be centered on the pipe alignment within the public utility easement. This travel-way shall be graded to no more than a ten percent cross slope unless otherwise approved by the Director.

Where casing design sizes are not City standard or where site conditions indicate a need for special casing design considerations, the designer shall specify the maximum design deflection, design corrosion allowance, and structural compatibility of the carrier pipe support system with the deflected casing. Designer shall provide calculations confirming the allowable vertical separation between the casing and other structures.

Structural evaluation may be required for new pipe and load changes upon existing pipe. Calculation of pipe load and bearing support shall be provided under conditions of less than three feet of cover, greater than twenty feet of cover, use of concrete pipe under all applications and where required by the Director.

Design and Construction Standards for pipe materials required for specific applications, shall be as shown in Table 4-0:

TABLE 4-0
<u>Pipe Material Applications</u>

DEFINITIONS

SJDIP	=	Slip Joint Ductile Iron Pipe
MJDIP	=	Mechanical Joint Ductile Iron Pipe
RJDIP	=	Restrained Joint Ductile Iron Pipe (type of restraint to be approved on a case-by-case basis)
PVC	=	Polyvinyl Chloride Pipe (SDR varies)

RCP = Reinforced Concrete Pipe
HDPE = High Density Polyethylene Pipe

WATER

Application	Materials*
Typical Installation	SJDIP, MJDIP
Pipe within standard casing or liner plate tunnel:	RJDIP, HDPE (case by case)
Pipe for stream crossings and aerial	RJDIP

SEWER

Application for Gravity Pipe (12" and less in diameter)	Materials*
1 to 3 feet of cover above pipe:	Case-by-case approval
3 to 10 feet of cover above pipe:	SJDIP, MJDIP, PVC-SDR35, PVC-SDR26
10 to 14 feet of cover above pipe:	SJDIP, MJDIP, PVC-SDR26
14 to 20 feet of cover above pipe:	SJDIP, MJDIP
Greater than 20 feet of cover:	Case-by-case approval
Pipe placed in fill material:	MJDIP
Pipe within 10 feet slope embankment:	MJDIPPipe
within standard casing or liner plate tunnel:	SJDIP, MJDIP
Pipe within modified steel casing:	SJDIP, MJDIP, PVC
Pipe within concrete encasement:	SJDIP, MJDIP
Pipe "meeting water main specifications"	SJDIP, MJDIP
Pipe under ponds, and detention ponds:	MJDIP
Pipe for stream crossings and aerial sewers:	RJDIP
Pipe bursting	HDPE

Application for Gravity Pipe (Greater than 12" in diameter)	Materials*
1 to 3 feet of cover above pipe:	Case-by-case approval
3 to 10 feet of cover above pipe:	SJDIP, MJDIP, RCP, PVC-large diameter
10 to 20 feet of cover above pipe:	SJDIP, MJDIP, RCP

Greater than 20 feet of cover:	Case-by-case approval
Pipe placed in fill material:	MJDIP
Pipe within 10 feet slope embankment:	MJDIP
Pipe within standard casing or liner plate tunnel:	SJDIP, MJDIP
Pipe within concrete encasement:	SJDIP, MJDIP
Pipe "meeting water main specifications":	SJDIP, MJDIP
Pipe under ponds, and detention ponds:	MJDIP
Pipe for stream crossings and aerial sewers:	RJDIP
Pipe bursting	HDPE

* Pipe classes shall be as identified in the Public Utilities Product Manual, available through the Public Utilities Department.

The design methods below shall be applied where case-by-case trench load analysis is required.

(4.3.2.1) General

The structural design of sewers shall conform with the methods set forth in the ASCE Manual No. 37 (latest edition), for the Design and Construction of Sanitary and Storm Sewers, except as modified hereafter.

(4.3.2.2) Field Supporting Strength

The field supporting strength for rigid pipes shall be the minimum ultimate three-edge bearing strength multiplied by the appropriate load factor.

Type Bedding	**Load Factor**
Concrete Cradle	
Class A - Reinforced	4.8
- Plain	2.5
Densely Compacted Backfill	
Class B	1.9
Lightly Compacted Backfill	
Class C	1.5

(4.3.2.2.1) The Class of bedding shall be determined by the engineer to provide the strength necessary for the soil and load conditions that will be encountered. Refer to supplemental design data in this section.

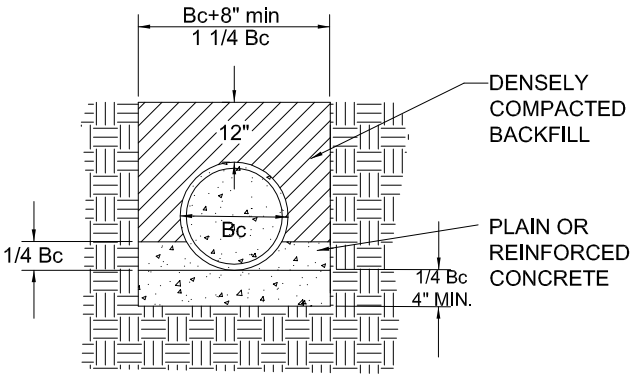

CONCRETE CRADLE

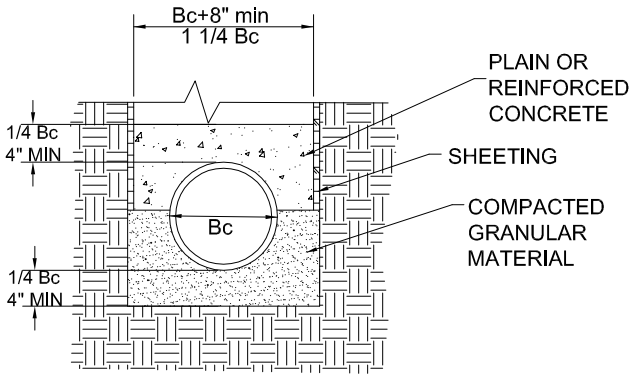

CONCRETE ARCH

CLASS A

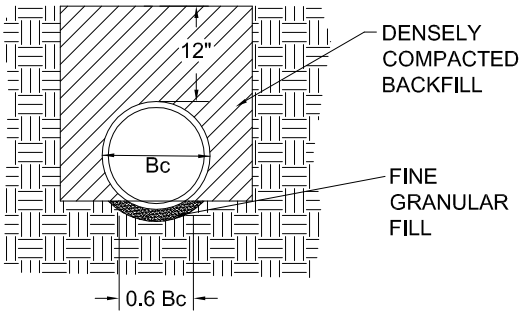

SHAPED SUBGRADE WITH GRANULAR MATERIAL

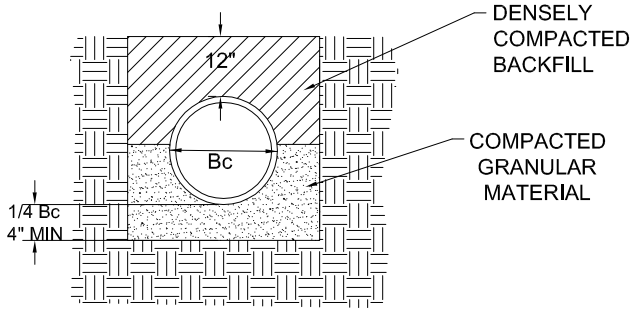

GRANULAR BEDDING

CLASS B

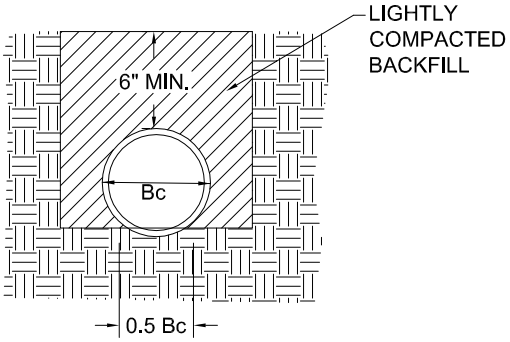

SHAPED SUBGRADE

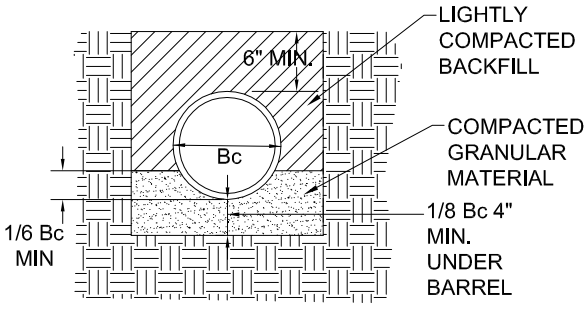

GRANULAR BEDDING

CLASS C

NOT TO SCALE

NO.	DATE	DESCRIPTION	INIT.
1.	7/01/04	2004 D&CSM UPDATE	SDC

CONDUIT BEDDING
SEWER LINES

DWG. NO
1

PAGE
4-7A

PVC PIPE DEFLECTION CALCULATIONS

UNDER MOST SOIL CONDITIONS, FLEXIBLE PVC TENDS TO DEFLECT INTO A NEARLY ELLIPTICAL SHAPE AND THE HORIZONTAL AND VERTICAL DEFLECTION MAY BE CONSIDERED EQUAL FOR SMALL DEFLECTIONS. THE EQUATION FOR CALCULATING DEFLECTION IS:

$$\%\frac{\Delta Y}{D} = 100\left(\frac{D_L * K * P}{0.149 * F/\Delta Y + 0.061 * E'}\right)$$

D_L = DEFLECTION LAG FACTOR (1.5 OR 1.0 WHEN PRISM LOAD IS ANTICIPATED)

K = BEDDING CONSTANT (DEPENDING ON BEDDING ANGLE).

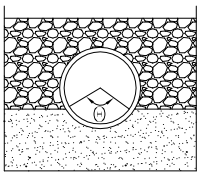

BEDDING ANGLE Θ	K
0	0.110
30	0.108
45	0.105
60	0.102
90	0.096
120	0.090
180	0.083

F/ΔY = PIPE STIFFNESS OR OUTSIDE DIAMETER TO THICKNESS RATIO (DR). FOR SDR 35 IT EQUALS 46 PSI (E = 400,000 PSI) AND 56 PSI IF E = 500,000, PSI) WHERE E = THE MODULUS OF ELASTICITY.

E' = MODULUS OF SOIL REACTION, PSI.

P = PRISM LOAD (SOIL PRESSURE), PSI.

LIVELOADS LIVE LOADS HAVE VERY LITTLE EFFECT ON PIPE PERFORMANCE EXCEPT AT SHALLOW DEPTHS.

THE LIVELOAD ON PVC BURIED 10' OR DEEPER UNDER HIGHWAY (H20) IS NEGLIGIBLE WHERE A H20 LOADING EQUALS A 20 TON TRUCK.

IF THE SEWER IS CROSSING RAILROAD OR AIRPORT, THE LIVE LOAD SHALL BE ACCOUNTED FOR UP TO DEPTH OF 24' AND GREATER.

MAXIMUM DEFLECTION = RECOMMEND A MAXIMUM OF FIVE PERCENT NOT TO EXCEED MANUFACTURER'S MAXIMUM.

NOTE: SOURCE OF COMPUTATIONS IS "HANDBOOK OF PVC PIPE DESIGN AND CONSTRUCTION", UNI-BELL PVC PIPE ASSOCIATION.

NOT TO SCALE

NO.	DATE	DESCRIPTION	INIT.
1.	7/01/04	2004 D&CSM UPDATE	SDC

PVC-PIPE DEFLECTION NOTES

DWG. NO 2

PAGE 4-7B

SUPERIMPOSED LOADS ON BURIED PIPE

PRISM LOAD SOIL PRESSURE (PSI)
P = WH

SOIL UNIT WEIGHT (lb/ft3)

HEIGHT COVER (FT)	100	110	120	125	130
2	1.39	1.53	1.67	1.74	1.81
3	2.08	2.29	2.50	2.60	2.71
4	2.78	3.06	3.33	3.47	3.61
5	3.47	3.82	4.17	4.34	4.51
6	4.17	4.58	5.00	5.21	5.42
7	4.86	5.35	5.83	6.08	6.32
8	5.56	6.11	6.67	6.94	7.22
10	6.94	7.64	8.33	8.68	9.03
12	8.33	9.17	10.00	10.42	10.33
14	9.72	10.69	11.67	12.15	12.64
16	11.11	12.22	13.22	13.89	14.44
18	12.50	13.75	15.00	15.63	16.25
20	13.89	15.28	16.67	17.36	18.06
22	15.28	16.81	18.33	19.10	19.86
24	16.67	18.33	20.00	20.83	21.67
26	18.06	19.86	21.67	22.57	23.47
28	19.44	21.39	23.33	24.31	25.28
30	20.83	22.92	25.00	26.04	27.08
35	24.31	26.74	29.17	30.38	31.06
40	27.78	30.56	33.33	34.72	36.11

NOTE: SOURCE OF TABLE IS "HANDBOOK OF PVC PIPE DESIGN AND CONSTRUCTION", UNIBALL PVC PIPE ASSOCIATION

NOT TO SCALE

NO.	DATE	DESCRIPTION	INIT.
1.	7/01/04	2004 D&CSM UPDATE	SDC

PVC-PIPE DEFLECTION NOTES

DWG. NO 3

PAGE 4-7C

SOIL TYPE BEDDING MATERIAL (UNIFIED CLASSIFICATION SYSTEM[a]) (1)	E´ FOR DEGREES OF COMPACTION OF BEDDING IN POUNDS PER SQUARE INCH			
	DUMPED (2)	SLIGHT <85% PROCTOR <40% RELATIVE DENSITY (3)	MODERATE 85%-95% PROCTOR 40%-70% RELATIVE DENSITY (4)	HIGH >95% PROCTOR >70% RELATIVE DENSITY (5)
FINE-GRAINED SOILS (LL>50[b]) SOILS WITH MEDIUM TO HIGH PLASTICITY CH, MH, CH-MH	NO DATA AVAILABLE, CONSULT A COMPETENT SOILS ENGINEER... SEE NOTE BELOW			
FINE-GRAINED SOILS (LL<50) SOILS WITH MEDIUM TO NO PLASTICITY CL, ML, ML-CL, WITH LESS THAN 25% COARSE-GRAINED PARTICLES	50	200	400	1,000
FINE-GRAINED SOILS (LL<50) SOILS WITH MEDIUM TO NO PLASTICITY CL, ML, ML-CL WITH MORE THAN 25% COARSE-GRAINED PARTICLES COARSE-GRAINED SOILS WITH FINES GM, GC, SM, SC - CONTAINS MORE THAN 12% FINES	100	400	1,000	2,000
COARSE-GRAINED SOILS WITH LITTLE OR NO FINES GW, GP, SW, SP[c] CONTAINS LESS THAN 12% FINES	200	1,000	2,000	3,000
CRUSHED ROCK	1,000	3,000	3,000	3,000
ACCURACY IN TERMS OF PERCENTAGE DEFLECTION[d]	±2	±2	±1	±0.5

[a]ASTM DESIGNATION D-2487. USBR DESIGNATION E-3.

[b]LL = LIQUID LIMIT.

[c]OR ANY BORDERLINE SOIL BEGINNING WITH ONE OF THESE SYMBOLS.

[d]FOR = 1% ACCURACY AND PREDICTED DEFLECTION OF 3% ACTUAL WOULD BE BETWEEN 2% AND 4%.

NOTE: VALUES APPLICABLE ONLY FOR FILLS LESS THAN 50 FT. (50M). TABLE DOES NOT INCLUDE ANY SAFETY FACTOR. FOR USE IN PREDICTING INITIAL DEFLECTIONS ONLY, APPROPRIATE DEFLECTION LAG FACTOR MUST BE APPLIED FOR LONG-TERM DEFLECTIONS. IF BEDDING FALLS ON THE BORDERLINE BETWEEN TWO COMPACTION CATEGORIES, SELECT LOWER E VALUE OR AVERAGE THE TWO VALUES. PERCENTAGE PROCTOR BASED ON LABORATORY MAXIMUM DRY DENSITY FROM TEST STANDARDS USING ABOUT 12,500 FT.-LB./CU. FT. (598.000 l/m) (ASTM D-698, AASHO T-99, USBR DESIGNATION E-11). 1 PSI = 6.9 kN/M².

NOTE: AN ACCEPTED CONSERVATIVE DESIGN VALUE BASED ON ASCE MANUAL 37 IS 700 PSI WITHOUT ADDITIONAL SOILS INFORMATION.

"SOIL REACTION FOR BURIED FLEXIBLE PIPE" BY AMSTER K. HOWARD. U.S. BUREAU OF RECLAMATION, DENVER, COLORADO. REPRINTED WITH PERMISSION FROM AMERICAN SOCIETY OF CIVIL ENGINEERS JOURNAL OF GEOTECHNICAL ENGINEERING DIVISION JANUARY 1977. PP. 33-42.

NO.	DATE	DESCRIPTION	INIT.
1.	7/01/04	2004 D&CSM UPDATE	SDC

MODULUS OF SOIL REACTION "E´"

DWG. NO 4

PAGE 4-7D

CIRCULAR PIPE (in Pounds Per Linear Foot - Impact Included)														
D	Bc	H (ft.)												
(in)	(ft)	0.5	1.0	1.5	2.0	2.5	3.0	3.5	4.0	5.0	6.0	7.0	8.0	9.0
12	1.33	3780	2080	1470	1080	760	550	450	380	290	230	190	160	130
15	1.63	4240	2360	1740	1280	900	660	540	450	350	280	230	190	160
18	1.92	4110	2610	1970	1460	1030	750	620	520	400	320	260	220	190
21	2.21	3920	2820	2190	1620	1150	840	690	580	450	360	300	250	210
24	2.50	4100	3010	2400	1780	1270	930	760	640	500	400	330	280	240
27	2.79	3880	2940	2590	1930	1380	1010	830	700	560	440	360	300	260
30	3.08	3620	2830	2770	2070	1480	1080	890	750	590	480	390	330	280
33	3.38	3390	2930	2950	2200	1580	1160	960	810	630	510	420	360	300
36	3.67	3190	2810	2930	2330	1670	1230	1020	860	670	550	450	380	330
39	3.96	3010	2670	2850	2440	1760	1290	1070	910	710	580	480	410	350
42	4.25	2860	2550	2770	2560	1840	1360	1130	950	750	610	510	430	370
48	4.83	2590	2330	2620	2480	1990	1470	1230	1040	820	670	560	470	410
54	5.42	2360	2150	2490	2360	2050	1580	1320	1120	890	730	610	520	440
60	6.00	2170	1990	2450	2250	1960	1680	1400	1190	950	780	650	560	480
66	6.58	2010	1850	2520	2160	1880	1640	1480	1260	1010	830	700	590	510
72	7.17	1870	1730	2580	2190	1810	1570	1510	1330	1060	880	740	630	540

DATA:
1. Unsurface Roadway
2. Loads - AASHTO HS 20, two 16,000 lb. dual-tired wheels, 4 ft. on centers, or alternate loading, four 12,000 lb. dual-tired wheels, 4 ft. on centers.
3. "B" wall circular pipe.

NOTES
1. Interpolate for intermediate pipe sizes and/or fill heights.
2. Critical loads:
   (a) For H = 0.5 and 1.0 ft., a single 16,000 lb. dual-tired wheel.
   (b) For H = 1.5 through 4.0 ft., two 16,000 lb. dual-tired wheels, 4 ft. on centers.
   (c) For H greater than 4.0 ft., alternate loading.
3. Truck live loads for H = 10.0 ft. or more are insignificant.

LLA = DISTRIBUTED LIVE LOAD AREA

L = LENGTH OF "LLA" PARALLEL TO LONGITUDINAL AXIS OF PIPE

Le = EFFECTIVE SUPPORTING LENGTH OF PIPE

H = DEPTH OF COVER

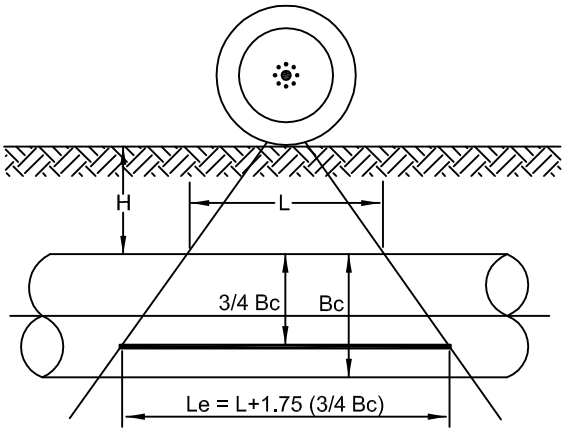

SOURCE OF TABLE "AMERICAN CONCRETE PIPE ASSOCIATION" CONCRETE PIPE DESIGN MANUAL.
REFER TO THIS SOURCE FOR ADDITIONAL DESIGN INFORMATION.

NOT TO SCALE

NO.	DATE	DESCRIPTION	INIT.
1.	7/01/04	2004 D&CSM UPDATE	SDC

VEHICLE LOADING ON CONCRETE PIPE

DWG. NO 5

PAGE 4-7E

(4.3.2.2.2) The bedding and backfill of PVC (SDR-35 or SDR 26) pipe shall comply with the following additional criteria:

A. Class B- Bed bottom, 75 degrees (minimum) measured from the invert of the pipe, on a fine granular fill over shaped trench bottom. The trench shall then be backfilled and compacted.

B. For all PVC pipe installation, a cushion of VDOT #68 or #78 aggregate shall be placed by hand to a depth of nine inches over the top of pipe prior to the trench being backfilled.

(4.3.2.2.3) The class of bedding shall be indicated on documents submitted for each sewer run.

(4.3.2.3) Allowable Working Strength

The allowable working strength shall be the field supporting strength multiplied by 0.65, thereby incorporating a factor of safety.

(4.3.2.4) Backfill Load

Unless more specific data is available, the backfill load (w) shall be computed as w = 130 pounds per cu. Ft. (Ku=0.130)

(4.3.2.5) Live Load

Sewers in public streets and traffic areas shall be designed for an HS-20 truck loading as specified by AASHTO for up to ten feet of cover. Concentrated Load: (single dual wheel)

Impact Factor: I = 1.3, 0’-0” to 1’-0; 1.2 to 2’-0; 1.1 to 3’-0”

Length of Pipe: L = length of distributed load area at top of pipe parallel to longitudinal axis of pipe. Refer to supplemental data in this section.

(4.3.2.6) Permitted Materials

Permitted sanitary sewer pipe materials shall conform to Public Utilities Product Manual, available through the Public Utilities Department.

(4.3.3) Item 3: Demand Calculations

(4.3.3.1) Considerations to Oversize Mains

Water or sewer mains shall be designed and constructed in size and/or capacity to accommodate specific development requirements, however, meeting the minimum requirements. If required by the Director, larger pipe sizes or capacities shall be accommodated. Prior to construction, the Director may enter into agreements with the developer to make reimbursement of the extra cost. Payment to the developer shall be made upon receipt of “substantial completion”.

(4.3.3.2) Consideration of Cost Sharing Among Users

The City of Harrisonburg may consider agreements by which developers are compensated by others for construction of water and sewer facilities when customers other than those located within the proposed development become connected to the same facilities. Such agreements shall be at the discretion of the Director of Public Utilities and shall be applied only upon the availability of ordinances or agreement policies endorsed by the City Manager and City Council.

(4.3.3.3) Designer Responsibilities

The designer shall provide calculations of average daily water and sewer demand. The engineering report makes provisions to identify demands within the limits of the proposed development. In addition, calculations of demands within adjacent common service areas shall also be made.

Within the proposed development an itemization of dwelling types and respective usage rates as shown in Table 4-1 shall be used when possible. Otherwise demand values per land zoning classification and respective usage rates as shown in Table 4-2 shall be used.

The designer shall make a written request to the Director of Public Utilities for identification of criteria for additional capacity, including adjacent common service areas which may in the future be serviced using extensions of the proposed water or sewer main. The designer shall provide a topographical vicinity map identifying the general location of existing and proposed mains as well as the limits of the area to be serviced by the original design. The Director shall finalize design criteria. Design costs incurred for consideration of expanded area service, if applicable, shall be borne by the Developer. (Note: Hydraulic information provided by the City under Item 4.3.5 shall be provided without charge.) An evaluation of expanded average daily water and sewer demands shall be provided in the engineering report.

(4.3.3.3.1) Designs within the County shall be in accordance with Section 7-2-4 of the City Code of Ordinances and the City's Design and Construction Standards Manual. The applicant may be required to submit appropriate engineering report or studies that demonstrate the anticipated impact on the City's water or sanitary sewer systems, along with any recommendations for changes or additions to the City's infrastructure indicated because of the proposed new connections. All engineering studies and reports shall be paid for by the applicant.

Table 4-1
Average Daily Water and Sewer Demand Based on Itemization of Development Units

Single Family	300 gpd	Shopping Centers per 1000 Sq. ft. of ultimate floor space	250 gpd
Duplex	600 gpd/unit	Hospitals, per bed	300 gpd
Apartment and Townhouse	300 gpd/unit	Nursing Homes, per bed	200 gpd
Office/Employment,	0.1 gpd/gross sq. ft.	Homes for the Aged, per bed	100 gpd
Elementary Schools without Showers, per person	10 gpd	Doctor's office in Med. Center per 1,000 square feet	500 gpd
Day Care Center, per person	10 gpd	Laundromats, 9 to 12 lb machines, per machine	500 gpd
Boarding Schools, per person	75 gpd	Community colleges, per student and faculty	15 gpd
Motels @ 65 gal. per Person, minimum per room	130 gpd	Swimming pools, per swimmer	10 gpd
Trailer Courts at 3 persons/trailer,	300 gpd	Theaters, Drive-In per vehicle	5 gpd
Restaurants, per seat	50 gpd	Theaters, Auditorium per seat	5 gpd
Interstate or through Highway restaurants, per seat	180 gpd	Interstate Rest Areas, per person	5 gpd
Factories, per person Per 8-hour shift	25 gpd	Picnic Areas, per person	5 gpd
Service Stations, per vehicle	10 gpd	Luxury Camps with flush toilets, Per campsite	100 gpd
High Schools with Showers, per student	16 gpd	Camps, Resort Day & Night with limited plumbing, per camp site	50 gpd

Table 4-2

Average Daily water and sewer demand
Based on land use zoning classification

R-1	1200gpd/Ac
R-2	1500gpd/Ac
R-3	1800gpd/Ac
R-4	2000gpd/Ac

R-5	2500gpd/Ac
R-6	2000gpd/Ac
R-7	2500gpd/Ac
B-1	2000gpd/Ac
B-2	2000gpd/Ac
M-1	2500gpd/Ac
MX-U	2000gpd/Ac

(4.3.4) Item 4: Peak Factors and Fire Flows

The designer shall identify peaking factors, which ultimately affect the sizing of water and sewer mains.

(4.3.4.1) Calculation of Peak Domestic Demand Flows

Maximum Daily Demand
The maximum daily demand shall be calculated as 2.5 times the average daily domestic demand.

Maximum Hourly (Peak Hourly)
The maximum hour domestic demand shall be calculated using the following formula when the number of residential units is less than 1,000:

$Q = 11.4 * (N^{0.544})$ where
Q is gallons per minute
N is number of residential units

For all other applications the peak hourly demand shall be determined by the multiplication of average daily demand (4.3.3.3) and the peaking factor (P.F.), the latter to be calculated as follows:

$$P.F. = (18 + p^{0.5}) / (4 + p^{0.5})$$

p= Population in thousands
or
Population equivalent in thousands, where population equivalent is 100 gallons per person per day.

(4.3.4.2) Peak Sanitary Sewer Design Flow rate

A. The minimum peak design capacity for “submain” sewers serving one or two branches shall be 400% of the average design flow.

B. The minimum peak design capacity for “main” sewers, which receive flow from two or more “submain” sewers, shall be 250% of the average design flow.

C. The minimum peak design capacity for “interceptor” sewers, which receive flow from a number of “mains” or forcmains, shall be 200% of the average design flow.

(4.3.4.3) Fire Flow Demand

The City of Harrisonburg shall require fire flow to be determined by Insurance Services Office (ISO) approved methods. “Guidelines For Completing a Needed Fire Flow Estimate” are available from the City Fire Department upon request.

(4.3.4.3.1) Determination of NFF

A. Single Family or Duplex Residential

Needed Fire Flow for One and Two Family Dwellings*:

Distance Between Buildings	Needed Fire Flow
Over 100’	500 gpm
31’ – 100’	750 gpm
11’ – 30’	1,000 gpm
10’ or less	1,500 gpm

*Dwellings not to exceed two stories in height.

B. Multi-family Residential, Commercial and Industrial

Needed fire flow in multi-family residential, commercial and industrial areas shall be calculated for each building based upon the type of construction using approved ISO methods. Calculations shall be verified by the City Fire Chief prior to plan approval.

C. Developments Outside of City Limits

Needed fire flow shall conform to the requirements of the regulating jurisdiction. Written documentation of the needed fire flow shall be provided from the regulating jurisdiction prior to plan approval.

(4.3.4.3.2) In residential developments (single family, duplex and multi-family) the NFF shall be provided at **each** proposed hydrant within the development. An exception shall be permitted when a dead end main is proposed where there is no feasible future extension. The feasibility of a future extension shall be determined by the Director of Public Utilities. In such a case the design flow to the terminal hydrant may be reduced to 50% of the NFF provided that 100% of the NFF is available within 400 feet of each building structure. Nothing in this section shall supercede design requirements for minimum pipe size and minimum allowable fire hydrant flow found elsewhere in this chapter.

(4.3.4.3.3) In commercial and industrial developments the designer shall show that the developer will provide the NFF to within 400 feet of the face of each proposed building measured along an approved route. The fire flow may be distributed among multiple fire hydrants provided that each hydrant is within 400 feet of the building and **each** hydrant is shown to be capable of delivering a minimum of 50% of the total needed fire flow while distributing the remaining 50% from the other qualifying hydrants. Nothing in this section shall supercede design requirements for minimum pipe size and minimum allowable hydrant flow found elsewhere in this chapter.

(4.3.4.3.4) In commercial and industrial developments where there is insufficient building information to provide specific NFF calculations, the water network system shall be designed to maximize conveyance of the available flow rate throughout the development. The design alternatives will be reviewed to accommodate the optimum cost benefit proposal. In this case future occupants must obtain approval for specific building applications and such buildings shall be designed such that the calculated NFF does not exceed the available fire flow. Nothing in this section shall supercede design requirements for minimum pipe size and minimum allowable hydrant flow found elsewhere in this chapter.

(4.3.4.3.5) In no case shall any fire hydrant deliver less than 500 gpm at 20 psi.

(4.3.4.3.6) Where equally feasible alternatives exist, designer shall attempt to limit flow rates not to exceed 750 gpm through existing 6” mains.

(4.3.4.3.7) In the event that the current infrastructure is unable to provide the calculated needed fire flow the designer shall reconsider the construction of the building to reduce the needed fire flow. If the infrastructure is unable to deliver the reduced needed fire flow the designer shall propose upgrades to the existing public infrastructure, on site storage or other alternatives to resolve the inadequacy.

(4.3.5) Item 5: Water System Hydraulic Design

The designer shall complete the hydraulic summary in the engineering report to support the selected water piping design. Mains shall be looped where possible. Where looping is required to deliver design flow rates, the cost shall be borne by the Developer. Extensions of 300 feet or less to accommodate looping shall be installed by the Developer and the cost shall be shared equally between the Developer and the City at unit prices acceptable to the Director. Incremental costs after 300 feet shall be borne by the City.

(4.3.5.1) Detailed design calculations shall be submitted to substantiate static pressure conditions of the proposed water main. The City will provide static hydraulic conditions of the existing water main at the proposed location for beginning extension of the new water main. The designer shall account for elevation differences along the proposed route and therein calculate static pressure of the proposed water main. As a minimum, hydrants, nodes, low points and high points shall be identified.

(4.3.5.2) Detailed design calculations shall be submitted to substantiate line sizes. These designs shall comply with the approved Water and Sewer Master Plan recommendation, where applicable, and the design standards set forth herein. The water system computations must be performed, demonstrating that the minimum pressure of 20 psi, as stated in Section 12 VAC 5-590-1200 of the Virginia Waterworks Regulations, shall be met under all conditions of flow. The computations are to be performed for peak hour demand or maximum daily demand plus fire flow, whichever is greater, using demand and peak data established in Items 3 and 4 of the engineering report. The designer shall model the proposed water system starting from the node of the water system which adjoins the existing main and then extending to a terminal point which may be within the proposed development, or may be within the expanded service area as defined by the Director of Public Utilities. The model shall also include the existing water system from the location of the fire flow test to the point of proposed connection.

(4.3.5.2.1) Proposed water mains shall be sized to meet the following criteria:

A. To convey the combined peak hourly domestic, industrial and other normal demands at velocities of less than 4 feet per second. May be waived if Peak Hourly Demand ≤ 625 GPM.

AND

B. To convey the larger of the peak hourly demand or maximum daily demand plus Needed Fire Flow (NFF) at greater than or equal to 20 psi.

AND

C. To convey the design flow rate at or below the velocities specified in the "Pipe Size Table" below.

Pipe Size Table

Pipe Size (Inches) *	Max. Allowable Flow (GPM)	Velocity (fps)
8	1,500	9.6
10	2,000	8.2
12	3,000	8.5
>12	>3,000	Per Case Review

* Notes:

1. Minimum Public main size shall be 8". Up to 50 feet of 6" pipe from the main to a fire hydrant is permitted. Requests to exceed 50 feet of 6" hydrant feed pipe shall be supported by transient surge analysis submitted by the designer, for review and approval.

(4.3.5.2.2) Hazen-William Coefficients to be used for the above computations are as follows for pipe and fittings, the latter expressed as equivalent pipe length.

Pipe Diameter Inches	Hazen-Williams Coefficient
8 New (Older than 10 yrs)	110 (100)
10 New (older than 10 yrs)	115 (100)
≥ 12 New (older than 10 yrs)	120 (110)

(4.3.5.2.3) In all cases, the hydraulic conditions at the points of connection to the existing water system shall be defined. The Director of Public Utilities shall provide, upon request, the hydraulic conditions at the node closest to the point of connection. The Director may option to model the City's entire system and provide to the designer the maximum available flow rate for design purposes. Requests for hydraulic information shall be addressed to Director of Public Utilities, Water and Sewer Operations Center, 2155 Beery Road, City of Harrisonburg, Virginia, 22801. The request shall include a copy of the City's water system map indicating the points of connection.

(4.3.5.3) The following conditions shall apply when extension of minimum size main does not provide peak hourly or fire flow supply at 20 PSI:

(4.3.5.3.1) Where oversize mains are required to provide the flow rate at minimum pressure within the development area, the cost shall be borne in its entirety by the developer.

(4.3.5.3.2) Under conditions where pumping is required to provide the flow rate at minimum pressure within the development area, the cost of pump station construction shall be borne by the developer in its entirety.

(4.3.5.3.3) Under conditions where system infrastructure cannot support the required flow rate at minimum pressure, upgrade of the existing infrastructure will be required.

(4.3.5.4) The Engineering Report shall include water service calculations for design flow rate and pressure (See Pages 4-27A & 4-27B). The following water system pressure design criteria shall apply:

(4.3.5.4.1) No meter shall be designed to have less than 20 psi under any condition, including fire flows.

(4.3.5.4.2) Residential water meters incurring between 20 and 35 psi at a flow rate of 12 gpm shall:

A. Be designed with a 1” service lateral

<u>AND</u>

B. Be designated on the plans as a **low pressure area**, possibly requiring an individual pressure boosting system to be installed and maintained at the discretion and cost of the homeowner. Individual pressure boosting systems shall meet all requirements of the Uniform Statewide Building Code.

(4.3.5.4.3) Any residential fixture incurring less than 20 psi at a flow rate of 12 gpm shall be addressed as specified in (4.3.5.4.2) A & B.

(4.3.5.4.4) All non-residential water meters and fixtures shall be evaluated based on the above pressure criteria, using the actual design flow rate.

(4.3.5.4.5) Where the water pressure exceeds maximum recommended levels that are compatible with the users purposes, the user shall install and maintain acceptable pressure reducing devices that conform to the provisions of the Uniform Statewide Building Code.

(4.3.5.5) A table shall be provided to identify all water service design criteria.

(4.3.5.5.1) Table headings shall include:

A. Lot identification
B. Design flow rate
C. Service line size and length (main to meter)
D. Meter size and type
E. Water service layout type (Ch. 7,Dwg 28)
F. Static pressure at the meter
G. Residual pressure at the meter
H. Service line size and length (meter to building)*
I. Static pressure at the most remote fixture
J. Residual pressure at the most remote fixture

* Where specific building information is not available the Designer shall estimate service line length and fixture elevation based on applicable zoning ordinances.

Services of similar design may be grouped within the table. The most critical case for each group must be identified and evaluated.

(4.3.6) Item 6: Sewer System Hydraulic Design

The designer shall complete the hydraulic table in the engineering report to support the selected sanitary sewer piping design; minimum pipe size shall be eight-inch diameter for public mains. Consideration of expanded service areas shall be made using the same format as set forth in items 4.3.3.3

The design of sanitary sewers shall be based on the following conditions:

(4.3.6.1) Sewers shall have a uniform slope and straight alignment between manholes.

(4.3.6.2) At all manholes where a smaller diameter pipe discharges into a larger one, the invert of the larger sewer shall be lowered so that the energy gradients of sewers at junctions are at the same level. Generally, this condition will be met by placing the 0.8 depth of flow in each sewer at the same elevation.

(4.3.6.2.1) Manholes shall be designed with a minimum of 0.10 foot of drop across the manhole. Each manhole invert is to be designed and shaped individually to best fit the particular inlet and outlet configuration and flowline.

(4.3.6.2.2) A drop connection shall be required where an upstream sewer enters a manhole at an elevation of 24 inches or more above the manhole invert unless sewer pipe crowns match elevations, or as may otherwise be required to conform to the use of standard fittings in the drop pipe construction. Where the difference in elevation between the incoming sewer and the manhole invert is less than 24 inches, the invert shall be filleted to prevent solids deposition. A drop pipe shall be used when the upstream to downstream invert difference exceeds 24 inches and the sewer deflects horizontally at a manhole. The drop through the manhole should be a maximum of four inches for a 90° horizontal deflection.
(4.3.6.2.3) Manholes shall be designed with a 0.50 foot drop across the manhole where the main enters the manhole at a grade of less than 2% and the main leaves the manhole at a grade of greater than 10%.

(4.3.6.3) The sewers shall be designed to have an increasing capacity at full pipe along the route of travel where possible and shall be designed in accordance with Section 4.3.3.1. Sewers shall also be designed to be free-flowing with the hydraulic grade below the crown and with hydraulic slopes sufficient to provide an average velocity of not less than 2.0 feet per second when running full to maintain cleansing flow. Computations of velocity of flow shall be based on a pipe coefficient of roughness “n” in the Manning formula of 0.014.

(4.3.6.4) Terminal lines serving less than 8,000 GPD shall have a slope of not less than one percent.

(4.3.6.5) Wherever possible the pipes shall be designed to convey sewerage at a velocity of less than 15 feet per second but not less than specified minimum velocity.

(4.3.6.6) Where due to steep grades, velocity exceeds 15 feet per second, and/or where drop manholes are impractical for reduction of velocity, the sewer shall be of ductile iron or other abrasion resistant material meeting ASTM or AWWA specifications, and shall be anchored where appropriate. Pipes on grades of 20% or more shall be anchored per Chapter 7, Drawing 15.

(4.3.6.7) In general, the following are minimum slopes in feet per hundred feet to be provided for pipes flowing at full depth to one-half of full depth.

Sewer Size	Minimum Slope in Feet/per 100 feet
8 inch	0.40
10 inch	0.28
12 inch	0.22
14 inch	0.17

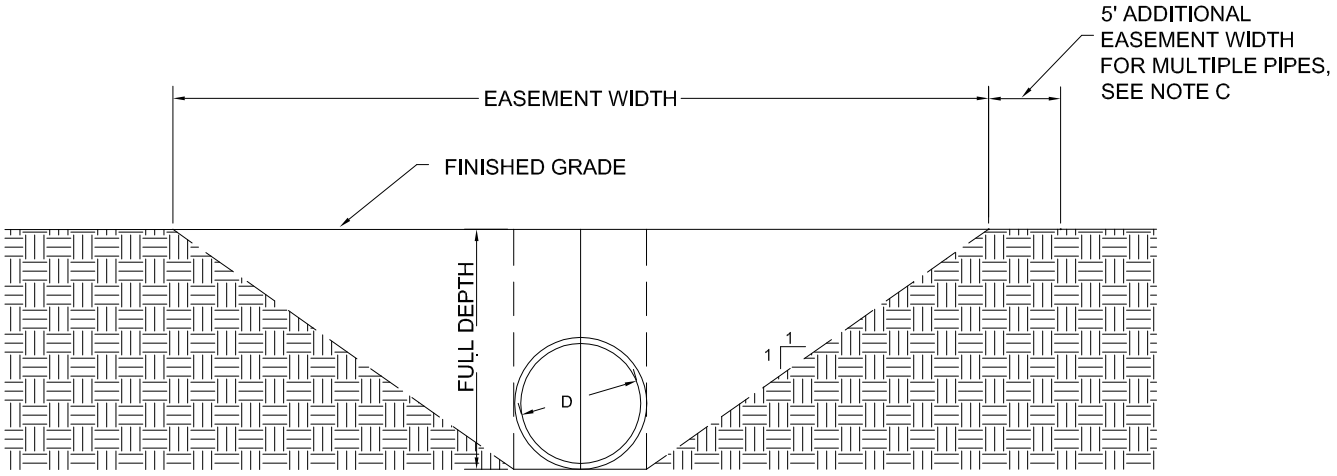

SINGLE PIPE

D = PIPE DIAMETER, CULVERT WIDTH, OR ELLIPTICAL PIPE SPAN

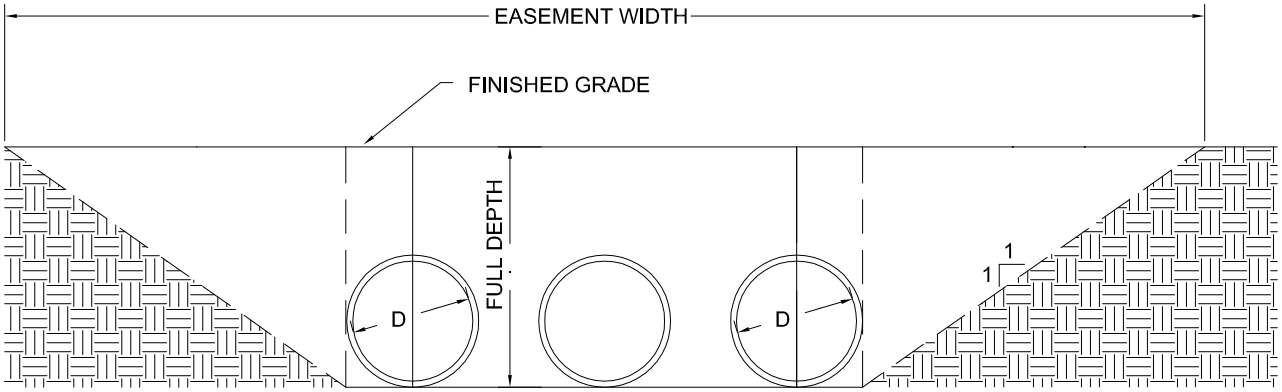

MULTIPLE PIPE

A. PUBLIC EASEMENT WIDTH SHALL BE DETERMINED BASED ON 1:1 SIDE SLOPE EXTENDING FROM THE FINISHED GRADE TO THE OUTSIDE EDGE OF PIPE (NOMINAL PIPE DIAMETER) ROUNDED UP TO THE NEAREST 1 FT. INCREMENT.

B. THIS EASEMENT SHALL EXTEND ALONG THE ENTIRE LENGTH OF THE SUBJECT PIPE TO THE CENTERLINE OF THE UPSTREAM AND DOWNSTREAM STRUCTURE.

C. MINIMUM EASEMENT WIDTH SHALL BE 20 FT.
MINIMUM EASEMENT WIDTH FOR MULTIPLE PIPES SHALL BE 25 FT.

NOT TO SCALE

NO.	DATE	DESCRIPTION	INIT.
1.	7/01/04	2004 D&CSM UPDATE	SDC

WATER, STORM SEWER AND SANITARY SEWER EASEMENTS

DWG. NO 6

PAGE 4-18A

15 inch	0.15
16 inch	0.14
18 inch	0.12
21 inch	0.10
24 inch	0.08
27 inch	0.067
30 inch	0.058
36 inch	0.046

(4.3.6.8) Sewer mains in parallel with other utilities shall be designed to provide a minimum clearance of 12” between the sewer laterals and other utilities. Wherever possible, laterals shall be designed to pass beneath water mains.

(4.3.6.9.) The Engineering Report shall include design of sanitary sewer laterals (see page 4-27D). Where the design flow rate exceeds fixture flow rate, calculations must be provided to confirm sewer lateral capacity. A table shall be provided to identify all sanitary sewer service design criteria.

(4.3.6.9.1) Table headings shall include:

A. Lot identification
B. Main line station at connection location (MH required for services 6" and larger)
C. Lateral and main invert elevations at connection to main
D. Lateral invert elevation at cleanouts
E. Lateral size
F. Lateral slope
G. Lateral length (main to cleanout)
H. Lateral length (cleanout to building)*
I. Minimum service floor elevation recognizing 18" minimum cover at all locations; minimum slope of 2.0% for 4" diameter, 1.0% for 6" diameter or as required by ICC design; and entry of lateral crown at crown of main or higher
J. Identify utility crossings where vertical separation is less than 18” (specify actual separation).

* Where specific building information is not available the Designer shall estimate lateral length and service elevation based on applicable zoning ordinances.

Services of similar design may be grouped within the table.

(4.3.7) Item 7: Easements

The engineering report shall be accompanied by presentation of all necessary easements in the format of a preliminary plat.

The design of easements shall conform to the following:

(4.3.7.1) Water and sewer mains may be constructed on private property provided that a water and/or sanitary sewer easement has been duly recorded. The owner shall have recorded easements from all parties holding legal interest in an adequate right-of-way necessary for proper installation, maintenance, operation or removal of water or sewage facilities.

(4.3.7.2) Water and/or sanitary sewer easement width shall be determined based on a one to one side slope (see detail) measured from the outside edge of pipe extending from the invert of the pipe at its lowest point below proposed grade and rounded up to the nearest foot.

(4.3.7.3) The minimum easement width for public water or sewer shall be 20 feet. Combination water and sewer easement width shall be minimum 25 feet. Where 1:1 excavation of the deepest pipe would expose or endanger the integrity of another pipe, additional width shall be required pursuant to 4.3.7.2

(4.3.7.4) Water and/or sanitary sewer easements conforming to this manual may be required by the Director where future main extensions are feasible.

(4.3.7.5) Utility Easements

Water and Sewer easements shall not be considered to satisfy the requirements for Utility Easements as set forth by the Subdivision Ordinance. Furthermore, there shall be no overlap or coincidence of Water and Sewer Easements and Utility Easements except by specific site plan approval. Such consideration shall be encouraged where there appears to be limited future need for utilization of the Utility Easement.

(4.3.7.6) Deeds of Easement shall conform to the format provided in the Appendix of this manual, as may be amended by the City Attorney.

(4.3.7.7) On a case-by-case basis Public Utilities may approve the crossing of its water and/or sanitary sewer easement, pursuant to engineering design requirements found under “Design Criteria” in this Chapter. Owners of such crossing easements are advised to consult independent legal counsel to protect their rights.

(4.3.7.7.1) Site plan reviews are intended only to confirm compliance with engineering design requirements. Site plan approval shall apply only to those conditions shown accurately on the plans. Conditions that are not in conformance with standards, policies or ordinances may require recording of additional legal instruments as deemed appropriate by the City's attorney including, but not limited to, the following:

A. Indemnification and Cost Recovery Agreements – Intended to indemnify and release the City from liability when certain encroachments are allowed within easements and to recover any present or future costs resulting from interference with the City's legal rights within an easement.

B. Joint Use Maintenance Agreements – Intended to allow shared use and/or joint occupancy of public and private utilities within a common structure

C. Formal Maintenance Agreements for Sanitary Sewer – Pursuant to the Harrisonburg City Code, Chapter 7, Section 7-3-64

(4.3.8) Item 8: Construction Cost Estimate

(4.3.8.1) The designer shall provide itemized cost estimates for water and for sewer utilities as proposed. This itemization shall be formatted to show unit prices, quantities and total cost.

(4.3.8.2) In the event that the Director of Public Utilities requires oversized mains, the designer shall itemize the difference in cost for consideration of participation by the City.

4.4 Design Criteria and Plan View Requirements for Construction Drawings: Water and Sewer Main Extensions

(4.4.1) Horizontal locations of water and sewer mains within public right-of-way:

(4.4.1.1) In general, the public water and sewer mains shall be located within the City right-of-way where a street is proposed; placement within existing streets will be reviewed on a case-by-case basis.

(4.4.1.2) The pipe shall be located near the center of the traffic lane as near as possible without encroaching within five feet of any concrete gutter/curb. The pipe shall not be located behind the curb, sidewalk or pavement except where a specific water/sewer area or easement is provided. Such arrangements shall require a separate area or easement for other utilities and approval by the Director.

(4.4.2) Horizontal locations of water and sewer mains on private property:

(4.4.2.1) Water and sewer mains shall be installed in easements where they are required to cross private property.

(4.4.2.2) This condition shall be avoided where possible, however, where permitted, this condition shall require an easement dedicated solely for water or sewer requiring commitment of the land to this purpose. Other utilities shall be accommodated by separate land dedication.

(4.4.2.3) This manual includes a copy of the City's generally accepted deed of easement language in the Appendix. The application of the referenced easement shall require that the pipes be located within the easement to accommodate sloped excavation, but no closer than five feet to the limits, whichever is more restrictive.

(4.4.3) Horizontal locations of water and sewer mains in proximity to utilities:

(4.4.3.1) The following factors shall be considered in providing adequate separation of water mains and sanitary sewer mains:

(4.4.3.1.1) Materials and types of joints for water and sewer mains.

(4.4.3.1.2) Soil conditions

(4.4.3.1.3) Service branch connections into the water main and sewer mains.

(4.4.3.1.4) Compensating variations in the horizontal and vertical separations.

(4.4.3.1.5) Space for future repairs and/or alterations of water and sewer mains.

(4.4.3.1.6) Offsetting of pipes around manholes.

(4.4.3.1.7) Identification of the physical constraints preventing normal separation.

(4.4.3.2) For the **parallel** installation of water mains and sanitary sewers, the following provisions shall apply:

(4.4.3.2.1) Normal conditions – water mains shall be laid at least ten feet horizontally from a sewer and/or manhole whenever possible. The distance shall be measured edge-to-edge.

(4.4.3.2.2) Unusual conditions – when local conditions prevent a horizontal separation of ten feet, the water main may be laid closer to a sewer and/or manhole provided that:

A. The bottom (invert) of the water main shall be at least eighteen inches above the top (crown) of the sewer

OR

B. Where the vertical separation cannot be obtained, the sewer shall be constructed of material required for construction of water pipe, pressure tested to 30 psi in place without leakage prior to backfilling

AND

C. The sewer manhole shall be of watertight construction and tested in place.

(4.4.3.3) For the installation of water mains **crossing** sanitary sewers:

(4.4.3.3.1) Normal conditions – Water mains crossing sewers shall be laid to provide a separation of at least eighteen inches between the bottom (invert) of the water main and the top (crown) of the sewer whenever possible.

(4.4.3.3.2) Unusual conditions – When local conditions prevent a vertical separation described above, the following construction shall be used:

A. Sewers passing over or under water mains shall be constructed of the materials required for water main construction and be pressure tested to 30 psi in place without leakage prior to backfilling.

B. Water mains passing under sewers shall in addition, be protected by providing:

1. A vertical separation of at least eighteen inches between the bottom (invert) of the sewer and the top (crown) of the water main;
2. Adequate structural support for the sewers to prevent excessive deflection of the joints and the settling on and breaking of the water main;

AND

3. That the length of the water and sewer lines be centered at the point of the crossing so that joints shall be equidistant and separated as far as possible.

(4.4.3.4) No water pipes shall pass through or come in contact with any part of a sanitary or storm sewer manhole. There shall be no connection between sewers and potable water system devices used for flushing.

(4.4.3.5) Underground electric, telephone, television cables, gas, chilled waterlines or any other underground utility may be installed within the public water or sewer easement parallel to the proposed main provided that the Director allows co-use of the referenced easement. It shall be demonstrated that **excavation** of the lower utility will **not expose** the upper utility. In general, the said utilities shall not be designed in parallel to encroach within **five (5) feet** of the water or sewer main. In addition, an indemnification agreement acceptable to the City's attorney shall be recorded. (See Chapter 4 "Easements")

All utilities shall be designed such that they do not create skewed crossings with an acute angle of less than 45 degrees where crossing water and sewer mains. Perpendicular crossings are preferred; however, when skewed crossings are unavoidable due to existing utilities and/or where the skewed crossing involves a pipe 30" or larger, the crossing must be specifically detailed on the plans.

Crossing with an acute angle of less than 45 degrees will not be approved regardless of the size of the utilities. Vertical separation at the crossings shall require 8" minimum separation at the pipe barrel and 18" minimum separation within two feet of the joints. Where water or sewer mains cross beneath box culverts or pipes 30" or larger, the water and sewer pipe shall be encased in a steel casing pipe.

(4.4.3.6) No sewer line shall pass within 50 feet of a drinking water supply well, source, or structure unless special construction and pipe materials are used to obtain adequate protection. The proposed design shall identify and adequately address the protection of all drinking water supply wells, sources, and structures up to a distance of 100 feet of the sewer line installation.

(4.4.3.6.1) Where a sewer line must encroach within 50 feet of a drinking water supply well, source or structure Section 7-2-1 of the City Code of Ordinances may be evoked, requiring the user of such well to connect to a city public water main. Upon connection to the public water main the

conflicting drinking water supply well shall be abandoned as a drinking water supply.

(4.4.4) Fire Hydrants:

(4.4.4.1) All fire hydrants will be publicly owned, dry barrel design, National Standard Threads, turn on counter-clockwise, and break-away top,

(4.4.4.2) To provide a minimum of one hydrant per 800 feet run of pipe with intention to establish a minimum coverage guideline,

(4.4.4.3) Required at locations specifically identified by the City Fire Chief, regardless of whether a main is being constructed, as necessary for containment of fire at a given location. Such hydrants shall be required based on the following:

For multi-family residential, commercial, industrial, and mercantile projects, the maximum distance from any accessible point of a structure to a fire hydrant shall be 400'. Accessibility shall be determined by use of roadways and parking lots suitable for use by fire apparatus. The distance shall be measured along the normal, unobstructed, path of travel for a vehicle. The Fire Chief may require closer hydrant spacing in special situations as he deems necessary.

(4.4.4.4) At the dead end of all lines for the purpose of facilitating flushing by the Water Department.

(4.4.4.5) Hydrants may be utilized for water main blow-offs where feasible.

(4.4.4.6) Fire hydrants shall be located at street intersections where possible.

(4.4.4.7) Fire hydrants shall not be obstructed by the construction of guardrails or fences or others.

(4.4.4.8) For structures with sprinkler and standpipe systems, a fire hydrant shall be located not closer than 50 feet to, nor further than 100 feet from, the Siamese connection.

(4.4.4.9) Fire hydrants proposed at locations subject to probable vehicular impact shall be protected by six inch raised curb island designs, wherever practical, or by guard post or other barrier designs in accordance with the International Fire Code.

(4.4.4.9.1) Guard post minimum requirements:

A. Constructed of steel not less than 4” in diameter and concrete filled.
B. Spaced not more than 4’ between posts on center.
C. Set not less than 3’ deep centered in a concrete footing of not less than a 15” diameter.
D. Set with the top of the post not less than 3’ above ground.
E. Located not less than 3’ from the fire hydrant.

(4.4.4.9.2) Other barrier designs - physical barriers shall be a minimum of 36” in height and shall resist a force of 12,000 lbs applied at 36” above the adjacent ground surface.

(4.4.4.10) Fire hydrants shall not be installed on lines not designed for fire flows or on lines less than 6” in diameter.

(4.4.5) Valves:

All valves shall be epoxy coated interior, non-rising stem, counter-clockwise opening with a two-inch operating nut centered within a City standard valve box. Valves up to and including twelve–inch size shall be vertical open resilient seat gate valves. Alternate designs and/or valves sixteen-inch and larger shall require submittal for approval by the Director. An approved identification post marking the location of any valve may be required by the Director.

(4.4.5.1) Fire Hydrant valves:

(4.4.5.1.1) Valves shall be located within five feet of the main where the hydrant feed is adjoined.

(4.4.5.1.2) Valves shall be located to provide a second valve within five feet of the hydrant if the hydrant is located greater than fifty feet from the main. The valve shall be installed in addition to the first valve. The second valve shall also be required where service connections are proposed to connect to fire hydrant feed pipes; thus allowing the hydrant to be shut off without affecting domestic service.

(4.4.5.2) Main line valves:

Valves shall be installed at the intersection of waterlines. Four valves shall be used at crosses and three valves used at tees except at fire hydrant leads, where only one gate valve will be required on the run. A valve shall also be installed at a minimum of every 800 feet on transmission mains. Valves may be added or deleted during plan review as required by the Director for special operational reasons.

(4.4.6) Air/Vacuum Valves and Blow-Off Assemblies

An approved identification post marking the location of air/vacuum valves and/or blow-off assemblies may be required by the Director.

(4.4.6.1) Automatic Combination Air/Vacuum Valves and Air Valves:

Automatic combination air/vacuum valves shall be installed on all water mains at strategic high points. Approved valves are listed in the Public Utilities Product Manual and must allow for exhaust upon startup, admit air on shutdown and releases air continuously during operation. Mains 16" and smaller shall have 1" air/vacuum valves and mains larger than 16" shall have 2" air/vacuum valves. Dead end mains of all size terminating at a high point shall be designed with an automatic combination air/vacuum valve. Hydrants shall be encouraged at high points with air/vacuum-valves, and in cases of small size mains with lesser elevation changes, the Director may provide exception to permit sole use of the hydrant for air/vacuum release purposes. Air valves shall only be used in lieu of automatic combination air/vacuum valves where required by the Director for special operational reasons.

(4.4.6.2) Blow-off Assemblies:

Blow-offs for water mains shall be provided at all "strategic" low and terminal points to aid in the removal of sediment deposited in the main. Blow-off assemblies are not required on water lines eight –inches and smaller unless specifically requested by the Director for special operational reasons.

(4.4.7) Fittings and Deflections:

(4.4.7.1) All hydrants, fire lines, stub-outs, valves (optional), bends, tees, crosses, wyes, plugs, and caps shall have poured-in-place concrete anchor thrust blocks against undisturbed earth, shall be sized appropriately and shall be restrained where applicable. Drawings shall denote such requirements by presentation or by reference. Design and construction shall conform to details contained within this manual. Where required bearing support cannot be obtained, the designer shall provide the contractor with the length of pipe to be restrained on the plans. In such instances, all joints within the design length provided must be restrained with approved mechanical joint restraining glands.

(4.4.7.2) In conditions where the design engineer intends for the contractor to use pipe deflection in lieu of fittings, the drawing shall include and make specific reference to the manufacturer's deflection tolerances. In no case shall the designed deflection be greater than 80% of the

CITY OF HARRISONBURG, VA
PUBLIC UTILITIES DEPARTMENT
WATER SERVICE DESIGN

SUPPLEMENTAL: CALCULATION OF DESIGN FLOWRATE

A. FIXTURE

	FIXTURE VALUE @ 60 PSI		NO.	FIXTURE VALUE
BATHTUB	8	X	_____	_____
BEDPAN WASHERS	10	X	_____	_____
BIDET	2	X	_____	_____
DENTAL UNIT	2	X	_____	_____
DRINKING FOUNTAIN - PUBLIC	2	X	_____	_____
KITCHEN SINK	2.2	X	_____	_____
LAVATORY	1.5	X	_____	_____
SHOWERHEAD (SHOWER ONLY)	2.5	X	_____	_____
SERVICE SINK	4	X	_____	_____
TOILET - FLUSH VALVE	35	X	_____	_____
TOILET - TANK TYPE	4	X	_____	_____
URINAL - PEDESTAL FLUSH VALVE	35	X	_____	_____
URINAL - WALL FLUSH VALVE	16	X	_____	_____
WASH SINK (EACH SET OF FAUCTES)	4	X	_____	_____
DISHWASHER	2	X	_____	_____
WASHING MACHINE	6	X	_____	_____
HOSE (50 FT WASH DOWN) - 1/2"	5	X	_____	_____
HOSE (50 FT WASH DOWN) - 5/8"	9	X	_____	_____
HOSE (50 FT WASH DOWN) - 3/4"	12	X	_____	_____
			TOTAL	_____

B. FLOWRATE FROM FIXTURE CHART (4-27C): _____ GPM

C. FLOWRATE ADJUSTED FOR PRESSURE

35 psi	0.74	70 psi	1.09
40 psi	0.80	80 psi	1.17
50 psi	0.90	90 psi	1.25
60 psi	1.00	100 psi	1.34

_____ GPM

D. IRRIGATION:

_____ Sections * x 1.16 or 0.40** _____ GPM

and/or _____ Hose Bibs x Fixture Value x _____ Pressure Factor

E. CONTINUOUS DEMAND FLOWRATE

_____ GPM

F. DESIGN FLOWRATE

FLOWRATE (C+D+E) _____ GPM

OR

FIRE SUPPRESSION ON METER _____ GPM

* 1 Section = 100 sq. ft area

** Spray systems use 1.16; Rotary systems use 0.40

Revised 2/22/06 to meet latest AWWA M22

CITY OF HARRISONBURG, VA
PUBLIC UTILITIES DEPARTMENT
WATER SERVICE DESIGN

SUPPLEMENTAL: SERVICE PRESSURE CALCULATIONS

A. PUBLIC WATER SYSTEM INFORMATION (REQUEST FROM WATER DEPARTMENT)

1. HYDRANT NUMBER _____ (FROM TAX MAPS)
2. WORKING PRESSURE _____ PSIG
3. HYDRANT ELEVATION _____ FEET

B. SERVICE INFORMATION

1. PROPOSED METER SIZE _____
2. ELEVATION OF METER _____ FEET
3. PIPE LENGTH, SIZE AND TYPE _____ FEET (FROM MAIN TO METER)
   _____ INCH AND _____ MATERIAL
4. EQUIVALENT LENGTH _____ FEET (CORP. STOP AND METER SETTING*)
5. ELEVATION OF FIXTURE _____ FEET
6. ELEVATION AT BUILDING _____ FEET
7. PIPE LENGTH, SIZE AND TYPE _____ FEET (FROM METER TO FIXTURE)
   _____ INCH AND _____ MATERIAL

C. CALCULATIONS OF **CONDITIONS AT THE METER @** _____ GPM **

1. STATIC PRESSURE = WORKING PRESSURE AT FH + ADJUSTMENT FOR ELEVATION

   _____ PSIG = _____ PSIG + [(_____ FEET - _____ FEET) * 0.434]
   (C1) (A2) (A3) (B2)

2. RESIDUAL PRESSURE = STATIC PRESS. - PIPE LOSSES - C.V. LOSSES - METER LOSSES

   _____ PSIG = _____ PSIG - (_____ FEET x _____ PSI / 100') -
   (C2) (C1) (B3 + B4)
   _____ PSIG - _____ PSIG
   (CV) (METER)

D. CALCULATION OF **CONDITIONS BEYOND THE METER @**_____ GPM **
(CALCULATIONS BEYOND THE METER SHALL CONFORM TO THE UNIFORM STATEWIDE BUILDING CODE. THE FOLLOWING CALCULATIONS ARE RECOMMENDED TO HELP IDENTIFY POTENTIAL PROBLEM SCENARIOS

1. STATIC PRESSURE @ FIXTURE = STATIC PRESSURE AT METER + ADJUSTMENT FOR ELEVATION

   _____ PSIG = _____ PSIG + [(_____ FEET - _____ FEET) x 0.434]
   (D1) (C1) (B2) (B5)

2. RESIDUAL PRESSURE @ BUILDING = RESIDUAL PRESS. AT METER + ADJUSTMENT FOR ELEVATION - PIPE LOSSES - BACKFLOW LOSSES

   _____ PSIG = _____ PSIG + [(_____ FEET - _____ FEET) x 0.434] -
   (D2) (C2) (B2) (B6)
   (_____ FEET x _____ PSI / 100') - _____ PSIG
   (B7) (BACKFLOW)

   SUPPLEMENTAL CHARTS ARE PROVIDED FOR HEADLOSSES THROUGH TUBING, CHECK VALVES AND METERS. IF A BACKFLOW VALVE IS USED, THE SPECIFIC VALVE HEADLOSS CURVE MAY BE NEEDED.

* EQUIVALENT LENGTH FOR CORP. STOP AND METER SETTING: 3/4" = 18' ; 1" = 22' ; 2" = 58' (DOES NOT INCLUDE METER OR CHECK VALVE LOSSES)

** USE 12 GPM FOR EACH SINGLE FAMILY RESIDENTIAL METER. FOR ALL OTHER APPLICATIONS USE THE DESIGN FLOWRATE CALCULATED ON FORM 4-27A

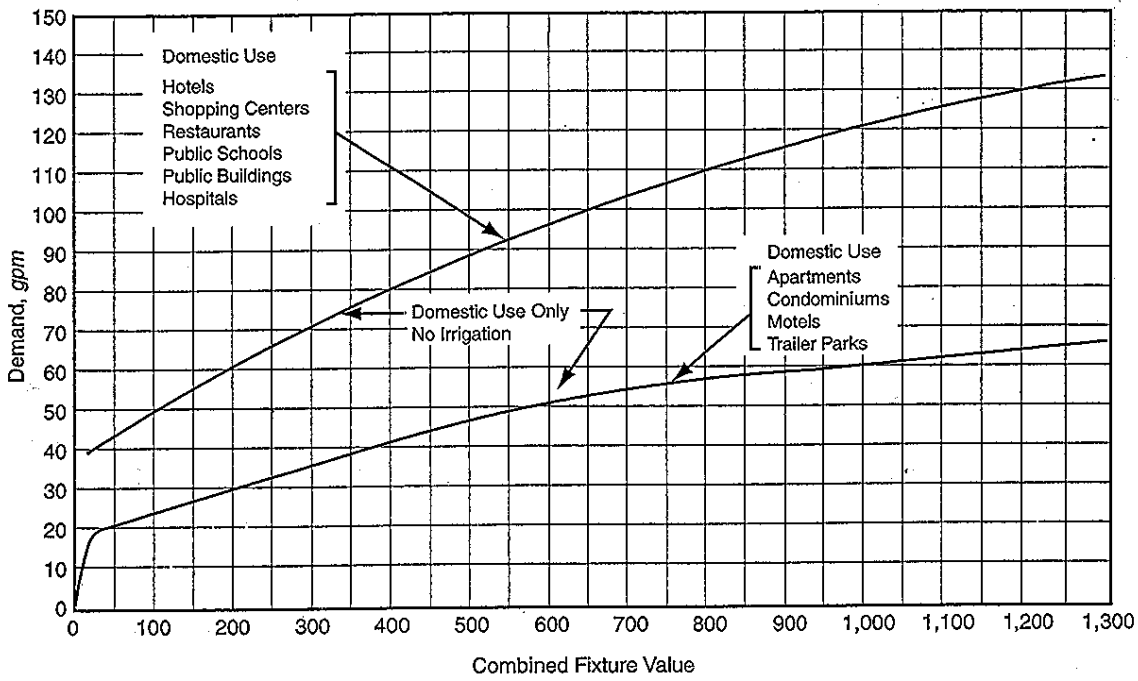

Water flow demand per fixture value—low range

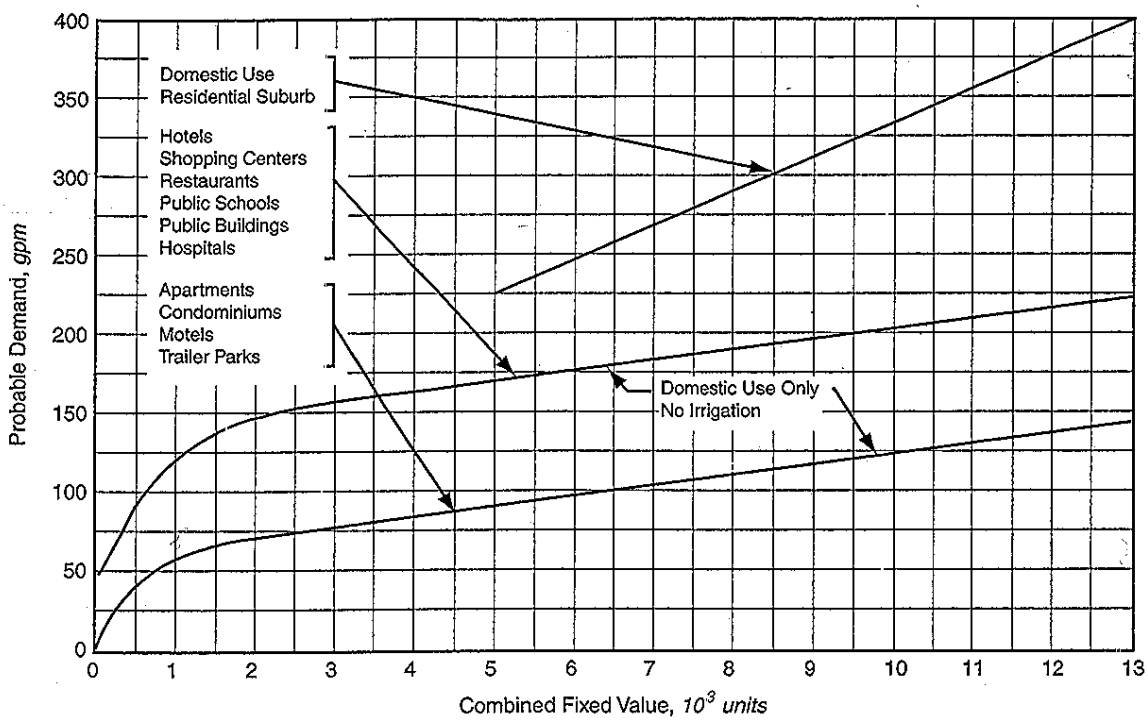

Water flow demand per fixture value—high range

NO.	DATE	DESCRIPTION	INIT.
1.	7/01/04	2004 D&CSM UPDATE	SDC
2.	02/22/06	UPDATE TO AWWA M22	DHG

FLOWRATE FROM FIXTURE UNITS

DWG. NO 7

PAGE 4-27C

SEWER SERVICE SIZING

BUILDING DRAINS AND SEWERS

MAXIMUM NUMBER OF FIXTURE UNITS CONNECTED TO ANY PORTION OF THE BUILDING DRAIN OR THE BUILDING SEWER, INCLUDING BRANCHES OF THE BUILDING DRAIN.

DIA.	FALL PER FOOT			
(IN.)	1/16 INCH	1/8 INCH	1/4 INCH	1/2 INCH
2			21	26
2.5			24	31
3		36 (a.)	42 (a.)	50 (a.)
4		180	216	250
5		390	480	575
6		700	840	1000
8	1400	1600	1920	2300
10	2500	2900	3500	4200
12	2900	4600	5600	6700
15	7000	8300	10000	12000

(a.) NOT OVER TWO WATER CLOSETS OR BATHROOM GROUPS

NO.	DATE	DESCRIPTION	INIT.
1.	7/01/04	2004 D&CSM UPDATE	SDC
2.	03/05/09	CORRECT MISSPELLING	SDC

FIXTURE UNITS AND DESIGN FLOWRATE

DWG. NO 8

PAGE 4-27D

VALVES AND FITTINGS FOR WHICH THE EQUIVALENT LENGTH IS ZERO ARE NOT KNOWN TO EXIST.

VALVE OR FITTING	NOMINAL PIPE SIZE 0.75	1.00	1.25	1.50	2.00	2.50	3.00
CORP STOP	5.9	6.7	7.5	7.7	8.4	0.0	0.0
CURB STOP	4.0	3.8	3.6	4.4	4.8	0.0	0.0
GATE VALVE	0.5	0.6	0.8	1.0	1.2	1.4	1.7
GLOBE VALVE	22.0	27.0	37.0	44.0	57.0	66.0	85.0
ANGLE VALVE	12.0	15.0	18.0	22.0	28.0	33.0	42.0
BFLY VALVE	6.0 *	6.0 *	6.0 *	6.0 *	6.0	7.0	10.0
SWING CHECK	5.0	5.0	7.0	9.0	11.0	14.0	16.0
SIDE TEE	3.0	5.0	6.0	8.0	10.0	12.0	15.0
STRAIGHT TEE	1.0	2.0	2.0	3.0	3.0	3.0	4.0
STD. ELBOW	2.0	2.0	3.0	4.0	5.0	6.0	7.0
LONG ELBOW	1.4	1.7	2.4	2.8	3.5	4.2	5.1
45 ELBOW	1.0	1.3	1.6	2.0	2.5	3.0	3.8

* THESE VALUES ARE GENERALLY NOT AVAILABLE FOR THE SIZES INDICATED. THE EQUIVALENT LENGTH SHOWN IS THE VALUE FOR THE NEXT LARGER SIZE FOR WHICH A VALUE IS PUBLISHED. EXERCISE CARE WHEN SPECIFYING THESE VALUES FOR THESE SIZES.

VALVE OR FITTING	NOMINAL PIPE SIZE 4.00	5.00	6.00	8.00	10.00	12.00
CORP STOP	0.0	0.0	0.0	0.0	0.0	0.0
CURB STOP	0.0	0.0	0.0	0.0	0.0	0.0
GATE VALVE	2.3	2.9	3.5	4.5	5.7	6.7
GLOBE VALVE	110.0	140.0	160.0	220.0	290.0	340.0
ANGLE VALVE	58.0	70.0	83.0	110.0	140.0	170.0
BFLY VALVE	12.0	9.0	10.0	12.0	19.0	21.0
SWING CHECK	22.0	27.0	32.0	45.0	55.0	65.0
SIDE TEE	20.0	25.0	30.0	35.0	50.0	60.0
STRAIGHT TEE	6.0	8.0	10.0	14.0	18.0	23.0
STD. ELBOW	10.0	12.0	14.0	18.0	22.0	27.0
LONG ELBOW	7.0	8.0	9.0	13.0	16.0	18.0
45 ELBOW	5.0	6.1	7.7	10.0	11.0	13.0

NO.	DATE	DESCRIPTION	INIT.
1.	7/01/04	2004 D&CSM UPDATE	SDC

PIPE LENGTH EQUIVALENCIES

DWG. NO 9

SIZING WATER SERVICE LINES

W/ FRICTION LOSS IN PIPE - C=130

3/4 INCH COPPER TUBING

TYPE K WITH 0.745 ID

FLOW GPM	VELOCITY FPS	HEADLOSS PSI / 100FT	FLOW GPM	VELOCITY FPS	HEADLOSS PSI / 100FT	FLOW GPM	VELOCITY FPS	HEADLOSS PSI / 100FT
1	0.735	0.23	7	5.14	8.49	13	9.56	26.63
2	1.47	0.84	8	5.88	10.91	14	10.30	30.57
3	2.21	1.77	9	6.61	13.51	15	11.00	34.77
4	2.94	3.01	10	7.35	16.41	16	11.80	39.19
5	3.67	4.55	11	8.09	19.53	17	12.50	43.78
6	4.41	6.37	12	8.83	22.99	18	13.20	48.63

1 INCH COPPER TUBING

TYPE K WITH 0.995 ID

FLOW GPM	VELOCITY FPS	HEADLOSS PSI / 100FT	FLOW GPM	VELOCITY FPS	HEADLOSS PSI / 100FT	FLOW GPM	VELOCITY FPS	HEADLOSS PSI / 100FT
2	0.824	0.21	9	3.71	3.31	25	10.30	21.91
3	1.24	0.44	10	4.12	4.04	30	12.37	30.74
4	1.65	0.74	12	4.95	5.63	35	14.42	40.92
5	2.06	1.12	14	5.77	7.53	40	16.50	53.29
6	2.48	1.57	16	6.60	9.61	45	18.55	65.38
7	2.89	2.08	18	7.42	11.95	50	20.60	79.24
8	3.30	2.68	20	8.24	14.51			

1 1/2 INCH COPPER TUBING

TYPE K WITH 1.481 ID

FLOW GPM	VELOCITY FPS	HEADLOSS PSI / 100FT	FLOW GPM	VELOCITY FPS	HEADLOSS PSI / 100FT	FLOW GPM	VELOCITY FPS	HEADLOSS PSI / 100FT
10	1.860	0.58	35	6.52	5.87	100	18.64	41.05
12	2.24	0.81	40	7.45	7.52	110	20.50	48.98
14	2.61	1.08	45	8.39	9.36	120	22.36	57.54
16	2.98	1.38	50	9.32	11.37	130	24.23	66.73
18	3.35	1.71	60	11.18	15.94	140	26.09	76.55
20	3.73	2.08	70	13.04	21.21	150	27.95	86.98
25	4.66	3.15	80	14.91	27.16	160	29.82	98.02
30	5.59	4.42	90	16.77	33.77	170	31.68	109.67

2 INCH COPPER TUBING

TYPE K WITH 1.959 ID

FLOW GPM	VELOCITY FPS	HEADLOSS PSI / 100FT	FLOW GPM	VELOCITY FPS	HEADLOSS PSI / 100FT	FLOW GPM	VELOCITY FPS	HEADLOSS PSI / 100FT
10	1.07	0.15	70	7.45	5.46	200	21.30	38.02
12	1.28	0.21	80	8.52	7.01	210	22.40	41.78
14	1.49	0.28	90	9.58	8.66	220	23.40	45.47
16	1.70	0.36	100	10.65	10.57	230	24.50	49.36
18	1.92	0.44	110	11.71	12.56	240	25.60	53.69
20	2.13	0.54	120	12.78	14.77	250	26.60	57.59
25	2.66	0.81	130	13.85	17.15	260	27.70	61.92
30	3.19	1.13	140	14.90	19.70	270	28.80	66.25
35	3.73	1.52	150	16.00	22.34	280	29.80	71.01
40	4.26	1.94	160	17.00	25.16	290	30.90	75.34
45	4.79	2.41	170	18.10	28.19	300	32.00	80.54
50	5.32	2.93	180	19.20	31.35			
60	6.39	4.10	190	20.20	34.60			

NO.	DATE	DESCRIPTION	INIT.
1.	7/01/04	2004 D&CSM UPDATE	SDC

COPPER SERVICE PIPE FRICTION LOSS

DWG. NO 10

PAGE 4-27F

GPM	2	4	6	8	10	12	14	16	18	20
PRES DROP PSI	5.0	5.3	5.6	6.0	6.4	6.8	7.3	7.8	8.5	9.4

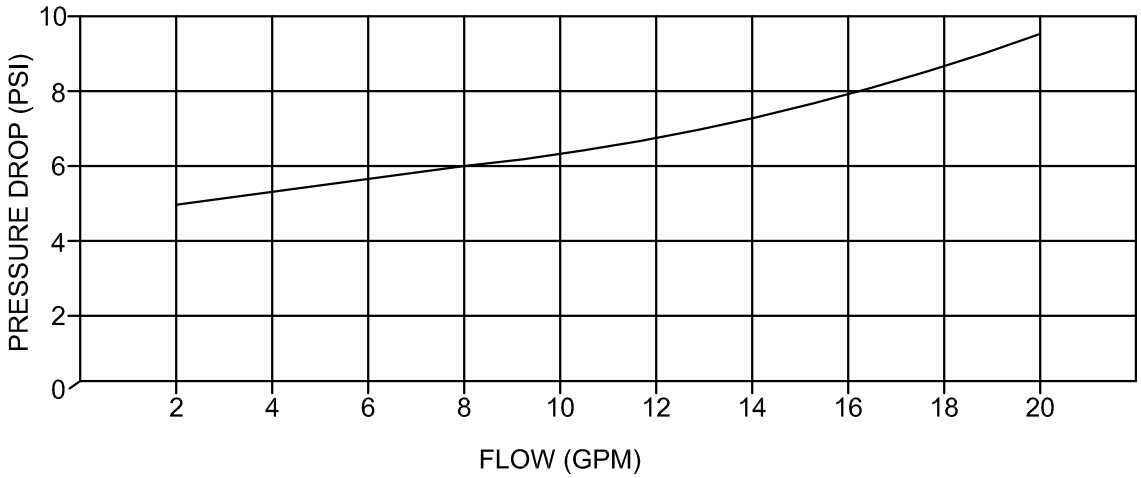

NOT TO SCALE

NO.	DATE	DESCRIPTION	INIT.
1.	7/01/04	2004 D&CSM UPDATE	SDC

3/4" ANGLED CHECK VALVE

DWG. NO 11

PAGE 4-27G

GPM	5	10	15	20	25	30	40	50
PRES DROP PSI	6.2	6.3	7.3	8.3	10	12	20	40

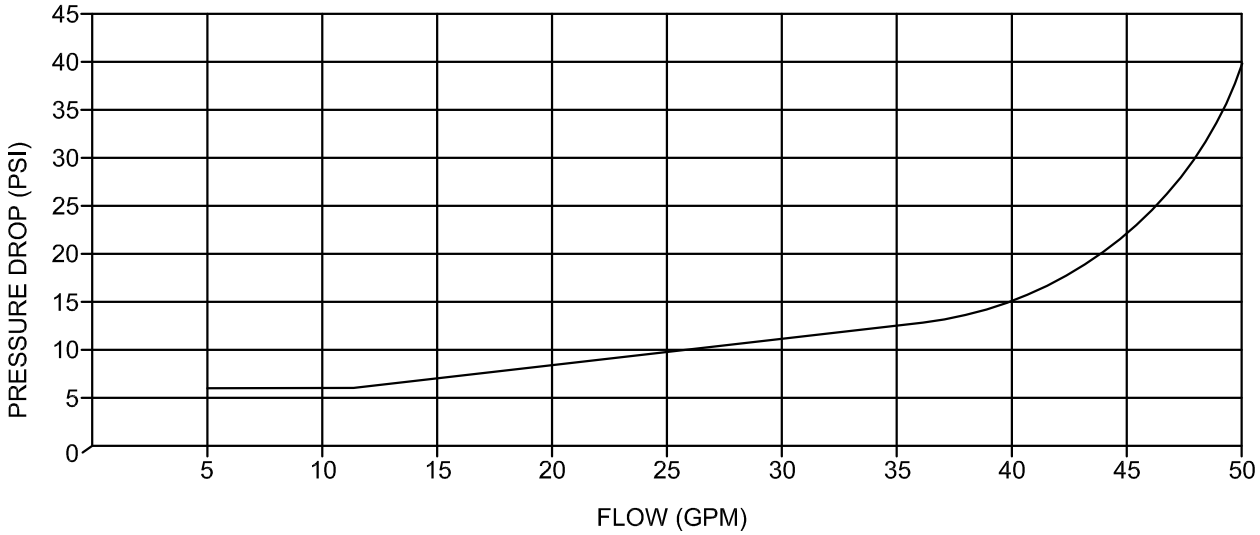

NOTE:
THE 1" CHECK VALVE CURVE IS FOR A 3/4" VALVE BODY WITH 1" CONNECTIONS.

NOT TO SCALE

NO.	DATE	DESCRIPTION	INIT.
1.	7/01/04	2004 D&CSM UPDATE	SDC

1" ANGLED CHECK VALVE

DWG. NO 12

PAGE 4-27H

GPM	25	50	75	100	125	150	175	200
PRES DROP PSI	1.4	1.5	2.4	3.9	6.0	8.3	11.2	14.7

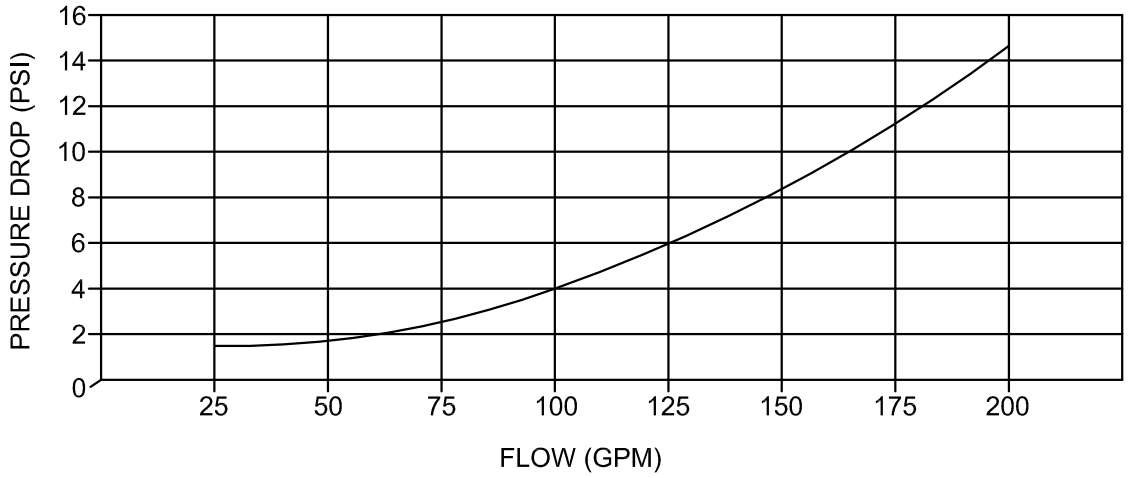

NOT TO SCALE

NO.	DATE	DESCRIPTION	INIT.
1.	7/01/04	2004 D&CSM UPDATE	SDC

2" ANGLED
CHECK VALVE

DWG. NO
13

PAGE
4-27I

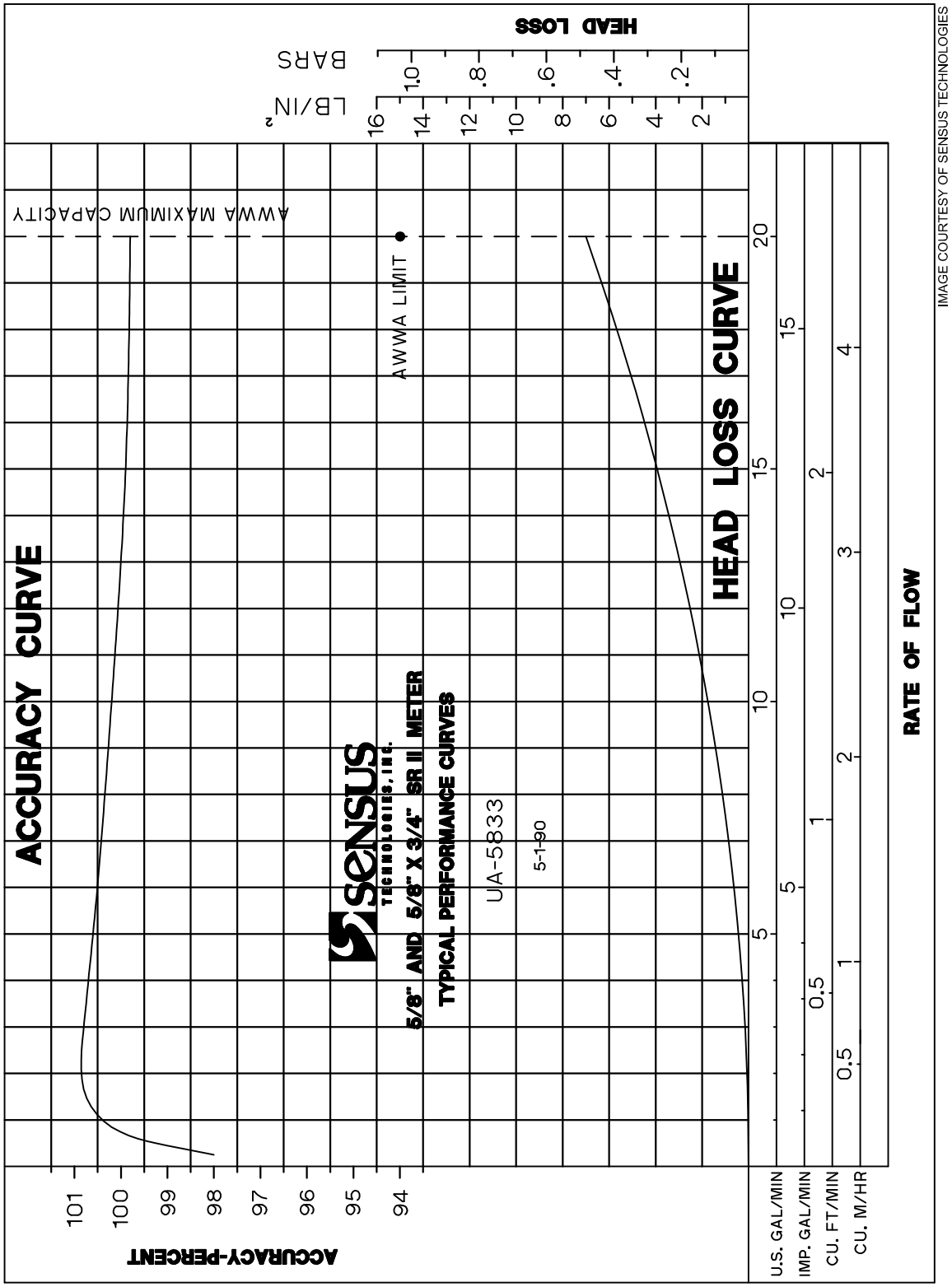

IMAGE COURTESY OF SENSUS TECHNOLOGIES

NOT TO SCALE

NO.	DATE	DESCRIPTION	INIT.
1.	7/01/04	2004 D&CSM UPDATE	SDC

5/8" X 3/4" METER
TYPICAL PERFORMANCE
CURVES

DWG. NO
14

PAGE
4-27J

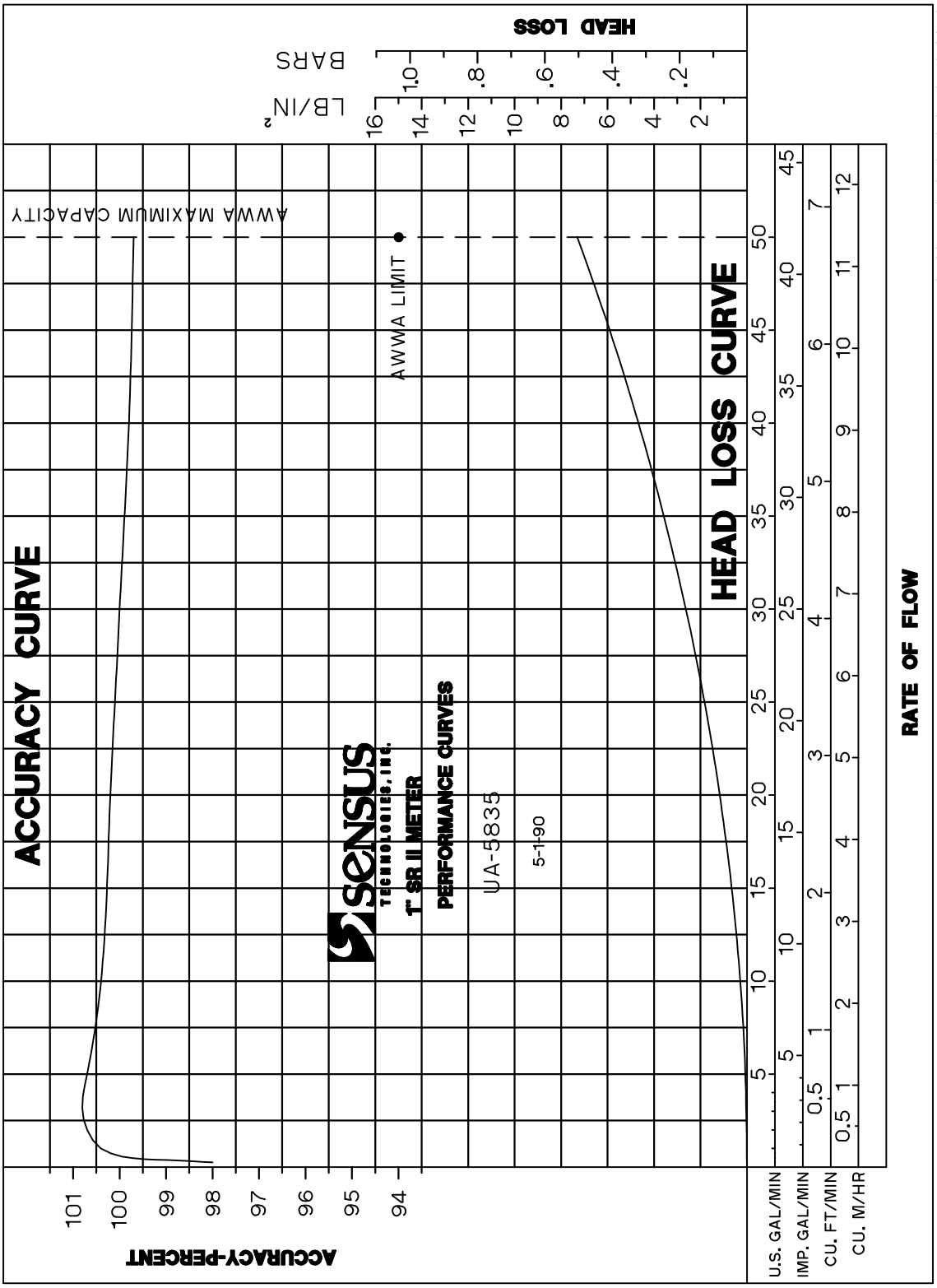

IMAGE COURTESY OF SENSUS TECHNOLOGIES

NOT TO SCALE

NO.	DATE	DESCRIPTION	INIT.
1.	7/01/04	2004 D&CSM UPDATE	SDC

1" METER TYPICAL PERFORMANCE CURVES

DWG. NO 15

PAGE 4-27K

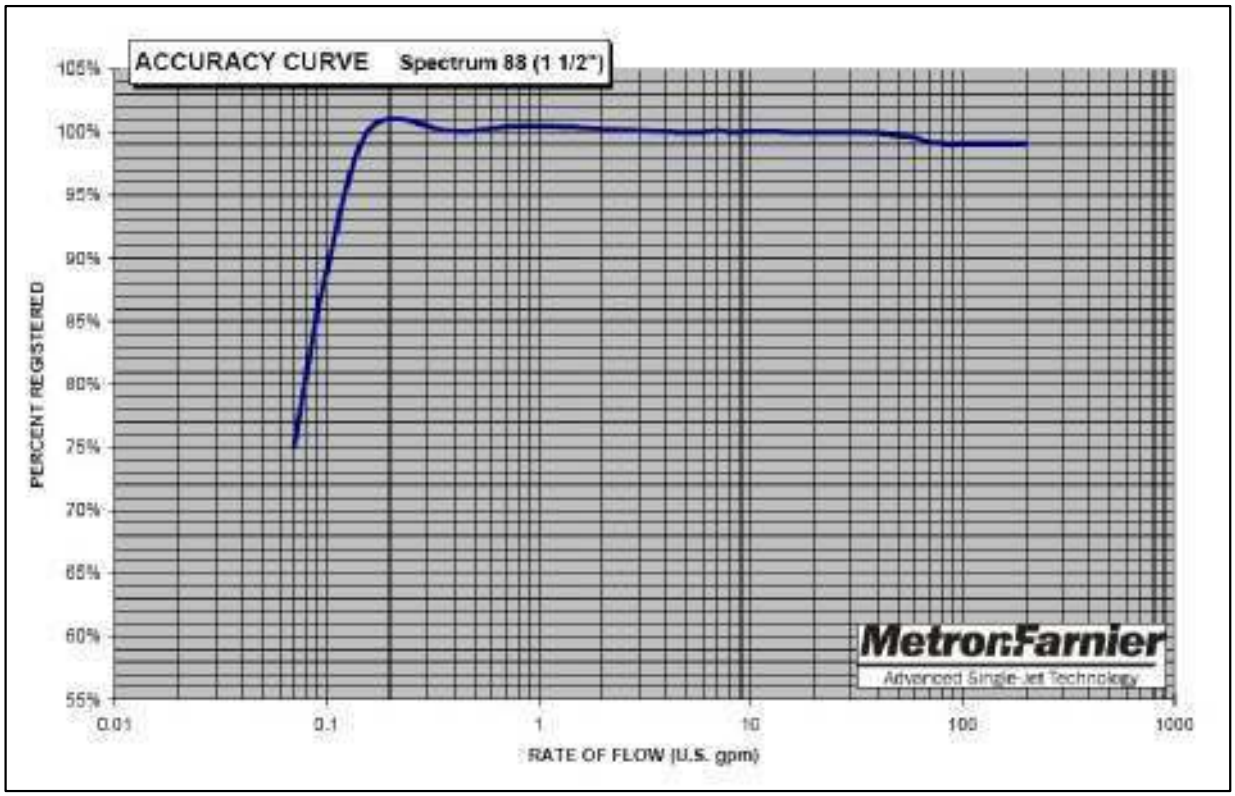

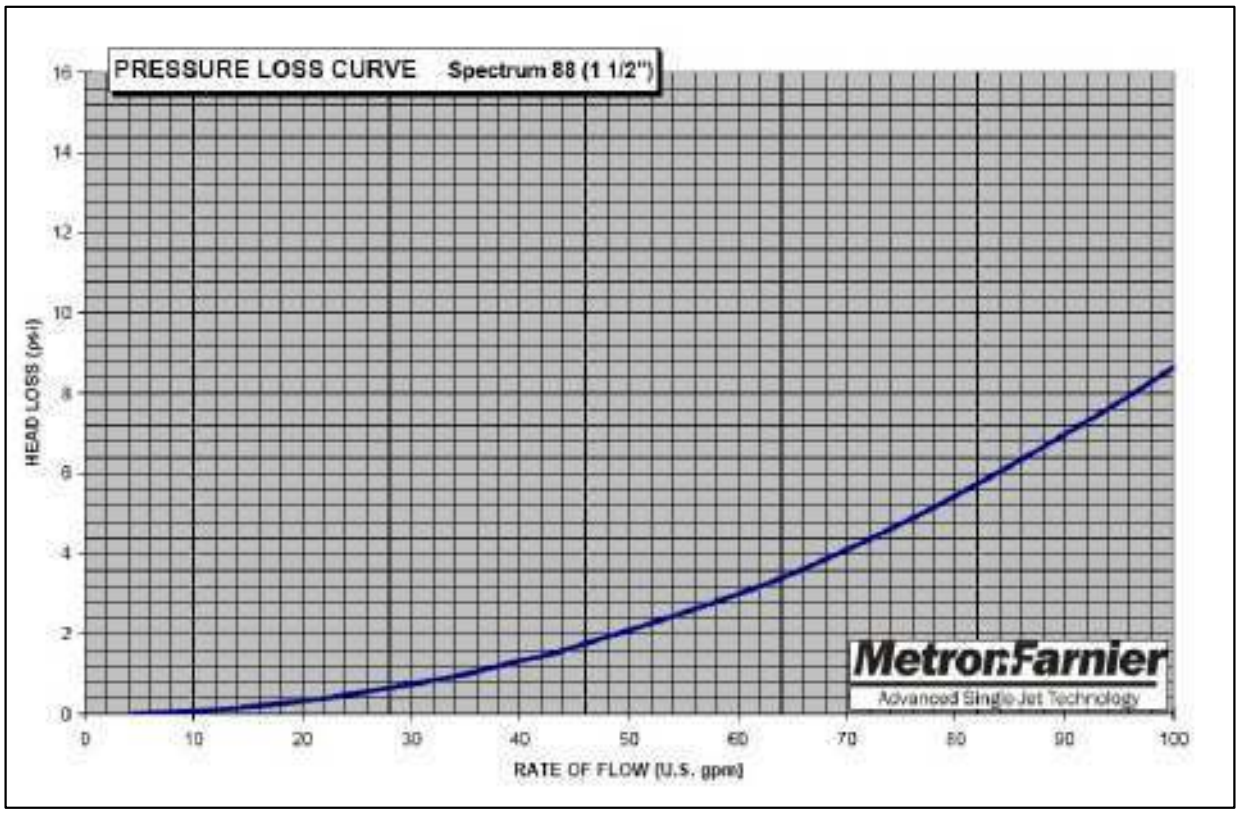

IMAGES COURTESY OF METRON-FARNIER

NOT TO SCALE

NO.	DATE	DESCRIPTION	INIT.
1.	7/01/04	2004 D&CSM UPDATE	SDC

1 1/2" METER
TYPICAL PERFORMANCE
CURVES

DWG. NO
16

PAGE
4-27L

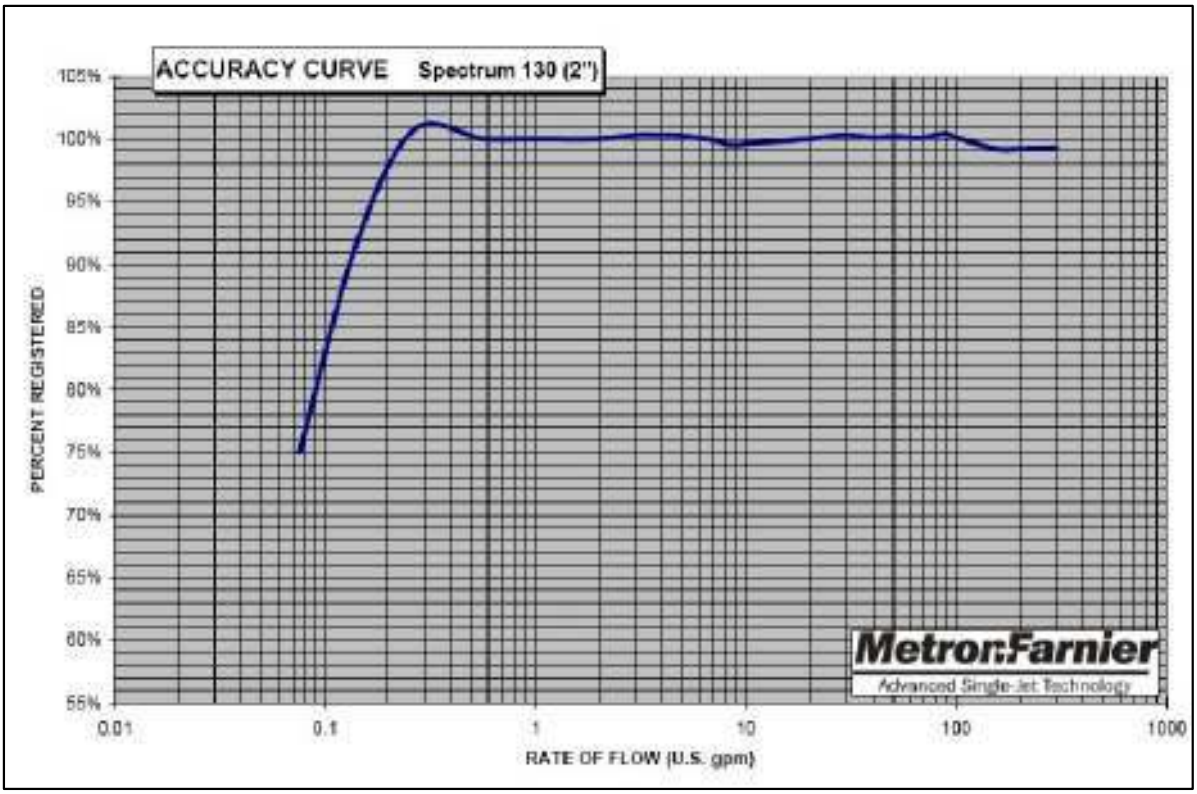

IMAGES COURTESY OF METRON-FARNIER

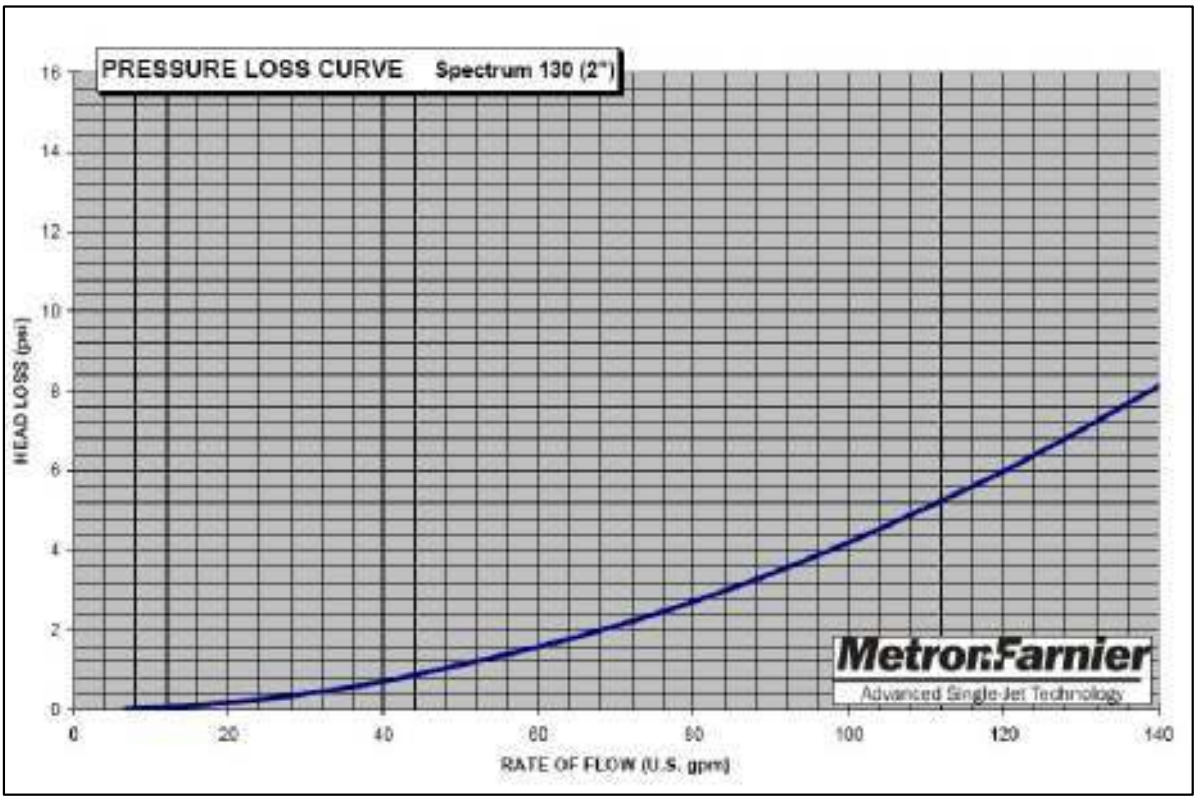

NOT TO SCALE

NO.	DATE	DESCRIPTION	INIT.
1.	7/01/04	2004 D&CSM UPDATE	SDC

2" METER
TYPICAL PERFORMANCE
CURVES

DWG. NO
17

PAGE
4-27M

manufacturer's maximum deflection. The design engineer shall provide a plan view on the drawings, including the manufacturer's minimum radius, the design radius, beginning and ending of curvature, a detail of the proposed typical deflection, and a note requiring that the water line be staked at a minimum of twenty-five foot intervals along the proposed deflected route.

(4.4.8) Manholes for Sanitary Sewers:

Construction drawings shall show in plan view the following:

(4.4.8.1) A table of bearings and distances shall be provided on the construction drawings for sanitary sewer construction; the purpose being to provide manhole fabrication data and construction stakeout information.

(4.4.8.2) Manholes for access to sewers shall be provided:

(4.4.8.2.1) At all intersections of differing size sewers

(4.4.8.2.2) At all points of change in alignment.

(4.4.8.2.3) At all points of change in grade.

(4.4.8.2.4) At points of industrial discharge as required by the Director to facilitate observation and sampling.

(4.4.8.2.5) At the connection point of private laterals 6" and larger.

(4.4.8.2.6) At the terminal end of the sanitary sewer main.

(4.4.8.2.7) At intervals not exceeding 400 feet on all sewers.

(4.4.8.3) Manholes for sewers up to 21 inches in diameter shall not be less than four feet, inside diameter. Manholes for sewers 24 inches and up to 36 inches shall have an inside diameter of not less than five feet. All manhole pipe openings shall have a minimum separation of six inches from other pipe openings or manhole joints. If the angle of deflection does not permit use of a four-foot inside diameter manhole, then a five-foot inside diameter manhole or special manhole detail must be provided.

(4.4.8.4) All sanitary sewer manholes or appurtenances subject to inflow from ponded surface waters and those with top elevations lower than the 100-year flood elevation must be equipped with an approved insert for protection against inflow. Wherever practical, manhole top elevations shall be set a minimum of one foot above the 100-year flood elevation, however, not to exceed three feet above the finished grade. The 100-year flood elevation shall be defined on the plans. Venting, as shown in Chapter 7,

Drawing 41, must be provided where a continuous watertight sewer section exceeds 1,000 feet in length.

(4.4.8.5) Manholes must have a minimum clear frame opening of 24 inches.

(4.4.9) Water and Sewer Service Connections

(4.4.9.1) All **partial** water service connections shall be constructed and tested simultaneously with the water main.

(4.4.9.1.1) At a minimum, the following water service information shall be specified on the plans:

A. Lot identification
B. Service line size and length (main to meter)
C. Meter size
D. Water service layout type (Ch. 7,Dwg 28)
E. Service line size (beyond meter)

Information provided for services of similar design may be grouped.

(4.4.9.1.2) Layout: Separate meters are required for each building structure, townhouse and condominium. Exceptions are defined in the Harrisonburg City Code, Chapter 7. The drawings shall provide and identify service to all lots.

(4.4.9.1.3) Size:

A. Service lines from the main to the meter and meter sizes shall be designed per AWWA M22, using known plumbing fixture counts. A minimum design flowrate of 12 Gallons Per Minute (GPM) shall be used for each single family residential meter. See pages 4-27A and 4-27B of this Chapter.

B. Service lines from the meter to the fixtures shall be designed in accordance with the requirements of the Virginia Uniform Statewide Building Code.

(4.4.9.1.4) Meter Box Setting: The meter box setting shall be located:

A. 24" back of curb

OR

B. Equal distance between curb and sidewalk in frontal utility strip

OR

C. 48" back of sidewalk/curb adjoinment

AND

D. Not to conflict with other utilities and accessible for reading.

(4.4.9.2) All sanitary sewer service connections shall be constructed and tested simultaneously with new sewer mains using tee-wye fittings.

(4.4.9.2.1) At a minimum, the following sanitary sewer service information shall be specified on the plans:

A. Lot identification
B. Main line station at connection location (MH required for services 6" and larger)
C. Invert elevation at connection to main
D. Lateral invert elevation at cleanout
E. Lateral size
F. Lateral slope
G. Lateral length (main to cleanout)
H. Lateral length (cleanout to building)*
I. Minimum service floor elevation recognizing 18" minimum cover at all locations; minimum slope of 2.0% for 4" diameter, 1% for 6" diameter or as required by ICC design; and entry of lateral crown at crown of main
J. Identify utility crossings where vertical separation is less than 18”; (specify actual separation).

* Where specific building information is not available the Designer shall estimate lateral length and service elevation based on applicable zoning ordinances.

Information provided for services of similar design may be grouped.

(4.4.9.2.2) Layout: There shall be a separate sewer lateral pipe for each building structure. Exceptions are defined in the Harrisonburg City Code, Chapter 7. The drawings shall provide and identify service to all lots. Pipe materials shall conform to the following:

A. Within Public Right-of-Way or Easement

1. PVC SDR-26 **(PVC SDR-35 will NOT be allowed)**

2. Cast Iron Soil Pipe

3. Ductile Iron

B. Private Property Beyond the Right-of-Way or Easement Limits

1. Per applicable local building codes.

(4.4.9.2.3) Size: ICC Fixture Count Method shall be used to size sanitary sewer laterals. The drawings shall designate all lateral sizes and slopes. Minimum slope shall be 2.0% for 4" diameter and 1.0% for 6" diameter or as justified by ICC design.

(4.4.9.2.4) Cleanouts: All sanitary sewer laterals shall be designed with a cleanout within 6” of the right-of-way or easement limit as shown on Design and Construction Standards details, except those which adjoin the main at a manhole. Where proposed sanitary sewer easement limits occur within private travelways or parking areas, the lateral cleanout required may be located beyond the paved area.

(4.4.9.2.5) Grease Traps and Sediment Traps: Those businesses and uses subject to disposal of oils, greases or sediments shall install a proper trap acceptable to the Director. (Re: Restaurants, body shops, car washes, etc.)

(4.4.10) Hydrostatic-Bacteriological Testing Schedule for Water Mains:

A schedule for testing of water mains shall be pre-approved by the Utilities Inspector.

(4.4.10.1) Leakage Testing pursuant to Chapter 7.

(4.4.10.2) Bacteriological Testing pursuant to Chapter 7.

(4.4.10.3) Representation on drawings

The drawings shall reference approved procedures for hydrostatic and bacteriological testing. In cases where existing water main must be retested, specify the extent of the testing on the plans.

(4.4.11) Special Condition Water and Sewer Main Design:

(4.4.11.1) Underwater Crossing

(4.4.11.1.1) Water main pipe shall be of special construction, pursuant to Chapter 7, using river crossing pipe or approved alternative.

(4.4.11.1.2) Water main valves shall be provided at both ends of the water crossing so that the underwater pipe can be isolated for tests or repair. The valves shall be easily accessible and not subject to flooding. (100 yr.) An approved identification post shall mark the valve locations.

(4.4.11.1.3) Test meter assemblies shall be located on the supply end of the water main crossing, and at a reasonable distance from each side of the crossing as identified by the Director. Test meter assemblies shall be placed such that they are not subject to flooding. (100 yr.)

(4.4.11.1.4) Water pipes crossing streams shall be provided with a minimum of three feet of cover beneath the stream channel bottom and to accommodate stream channel improvements. Backfill shall be approved on a case review with material designed to accommodate stream velocities and channel improvements.

(4.4.11.1.5) Wherever sewer pipes are proposed to enter or cross streams the designer shall attach to the Engineering Report a written statement explaining the reasons for designing a sewer entering or crossing a stream and the reasons for requesting less than the design cover if applicable. Sewer pipes entering or crossing streams shall be designed as follows:

A. Such that the tops of all sewers be at a sufficient depth below the natural bottom of the streambed to protect the sewer line. In general, one foot of suitable cover shall be provided where the stream is located in rock and three feet of suitable cover in other material. Less cover will be considered if the proposed sewer crossing is encased in concrete and will not interfere with future improvements to the stream channel. Below paved channels, the crown of the sewer lines should be placed under the channel pavement. Sewers shall remain fully operational during the 25-year flood/wave action. Sewers and their appurtenances located along streams shall be protected against the normal range of high and low water conditions, including the 100-year flood/wave action. Sewers located along streams shall be located outside of the streambed wherever possible and should be sufficiently removed therefrom to provide for future possible channel widening.

AND

B. Sewers entering or crossing streams shall be constructed of watertight pipe. The pipe and joints shall be tested in place and shall exhibit zero infiltration. Sewers laid on piers across ravines or streams may be allowed only when it can be demonstrated that no other practical alternative exists. Such sewers on piers shall be constructed in accordance with the requirements for sewers entering or crossing under streams. Construction methods and materials of construction shall be such that sewers will remain watertight and free from change in alignment or grade due to anticipated hydraulic and physical loads, erosion, and impact.

AND

C. Depressed sewers or siphons shall have not less than two barrels, with a minimum pipe size of six inches and shall be provided with necessary appurtenances for convenient flushing and maintenance; the inlet and outlet chambers shall be designed to facilitate cleaning; and in general, sufficient head shall be provided and pipe sizes selected to secure velocities of at least three feet per second for average flows. The inlet and outlet details shall be arranged so that normal flow is diverted to one barrel and so that either barrel may be removed for service or cleaning.

(4.4.11.2) Highway Crossings for Water and Sewer Mains

(4.4.11.2.1) The Contractor shall cooperate with the governmental authority or authorities having jurisdiction over the work in these crossings. Where the crossing is to be installed beneath a State highway, all operations and materials shall conform to the Virginia Department of Transportation's regulations governing such matters. The approval of the Virginia Department of Transportation of all materials and methods shall be obtained before work is begun. Within the City boundaries, the City Public Works Department has been recognized to assume the responsibilities of the Virginia Department of Transportation and shall be recognized accordingly. The Contractor shall be responsible for the location of all utilities in the area of the highway crossing.

(4.4.11.2.2) In general, highway crossings shall be made utilizing steel casing pipe installed by boring and/or jacking techniques. Plans shall be provided and shall:

A. Be approved by the governing highway authority

AND

B. Shall include specifications, which combine the conditions of the government authority and specifications for construction procedures (4.4.11.4 thru 10).

(4.4.11.3) Railroad Crossings for Water and Sewer Mains

(4.4.11.3.1) Conform to A. R. E. A. specifications and provide applicable permit from railroad authority.

(4.4.11.3.2) Plans shall be provided and shall:

A. Be approved by the governing railroad authority

AND

B. Shall include specifications, which combine the conditions of the governing authority and specifications for construction procedures (4.4.11.4 thru 10).

(4.4.11.4) Boring and Jacking Materials

(4.4.11.4.1) Welded steel pipe for boring and jacking *highway crossings* shall be shop prime coated inside and out and shall have the following minimum wall thickness:

Diameter	Thickness (minimum)
36" & less	3/8"
42" & greater	1/2"

(4.4.11.4.2) The casing joints shall be squared and continuously welded with full penetration welds to create a waterproof enclosure. Edges of the welds shall be ground on the inside of the casing.

(4.4.11.5) Jacking Method

(4.4.11.5.1) The Contractor shall submit to the Director for approval, an outline of the methods and means proposed to be used in completing the work.

(4.4.11.5.2) Hydraulic jacks shall be used in the jacking operation and extreme care shall be taken to hold the pipe to exact line and grade. Deviation at any point along the casing pipe from line and grade shall not

exceed six inches in any direction. Excavation at the heading shall not exceed two feet ahead of the lead pipe.

(4.4.11.5.3) The jacking pit shall be of adequate length to provide room for the jacking frame, the jacking head, the reaction blocks, the jacks and one section of casing pipe. The pit shall be sufficiently wide to allow ample working space on each side of the jacking frame. The depth of the pit shall be such that the invert of the pipe when placed on the guide frame will be at the elevation desired for the completed line. The pit shall be constructed to conform to 29 CFR Part 1926.650-.652.

(4.4.11.5.4) The reaction blocks shall be adequately designed to carry the thrust of the jacks to the soil without excessive soil deflection and in such a manner as to avoid any disturbance of adjacent structures or utilities. Adequate safety protection shall be provided at the top of the pit at all times.

(4.4.11.6) Boring Method

(4.4.11.6.1) When utilized, the drilling machine shall be securely supported and braced so that the casing pipe can be set to the proper line and grade and will not deflect therefrom during the boring operation. Deviation from the specified line and grade shall not exceed six inches in any direction at any point along the casing pipe.

(4.4.11.6.2) The Contractor shall submit to the Director for approval, an outline of the methods and means proposed to be used in completing the work.

(4.4.11.6.3) Boring machines shall afford adequate protection against loss of ground and permit ground support adjacent to the tunnel face, as required by ground conditions.

(4.4.11.6.4) The method used to advance the boring machine shall ensure its correct alignment at all times, without binding or imposing excessive loads on the initial tunnel supports or upon the surrounding ground.

(4.4.11.6.5) The boring pit shall be of adequate length to provide room for the boring machine and appurtenances and one section of casing pipe. The pit shall be sufficiently wide to allow ample working space on each side of the boring machine. The depth of the pit shall be such that the invert of the pipe when placed on the guide frame will be at the elevation desired for the completed line. The pit shall be constructed to conform to 29 CFR Part 1926.650-.652. Adequate safety protection shall be provided at the top of the pit at all times.

(4.4.11.7) Tunneling Materials

(4.4.11.7.1) Encasing conduits shall be galvanized steel tunnel liner plate. Encasing conduits shall be of sufficient strength to support all superimposed loads including an AASHTO H-20 loading for conduits installed under highways. The thickness of the tunnel liner plate shall not be less than that required by the submitted load computations, except for the crossing of Interstate Highways, where the minimum shall be eight-gauge. The thickness gauge shall be marked on each liner plate, in an approved manner by the liner plate manufacturer. The tunnel liner plate shall be hot-dipped galvanized in accordance with the requirements of the ASTM Specification Designation A-123, and the inside and outside surfaces of the tunnel liner plate shall be factory coated with asphaltic material to a minimum thickness of 0.05 inches. Bolts and nuts shall be the diameter and length recommended by the manufacturer. Bolts and nuts shall conform to ASTM A-307, Grade A, and shall be hot-dipped galvanized in accordance with ASTM A-153. Sufficient plates shall be provided with grout holes to provide four grout holes for each ring of plates. Grout holes shall be two-inch half couplings provided with two-inch cast iron plugs. The Contractor shall furnish the shop drawings of the liner plate to the Director for approval. The shop drawings shall show the cross section dimensions, diameter, thickness gauge, and grout hole locations in the liner plate. No liner plate will be permitted to be used until shop drawings for the plate, have been approved by the Director. Tunnel liner plates shall be sectional steel liner plates.

(4.4.11.7.2) Grout for filling voids caused by the installation of the tunnel liner plates shall consist of one part Portland cement, one part sand with 100 percent passing U.S. Standard sieve Number 16. Grout shall have a minimum compressive strength of not less than 100 psi attained within 24 hours.

(4.4.11.8) Tunnel Construction Methods

(4.4.11.8.1) The tunnels shall be constructed by personnel fully qualified by experience for such work to the lines and grades shown on the Drawings.

(4.4.11.8.2) The Contractor shall submit to the Director for approval an outline of the methods and means proposed to be used in completing the work.

(4.4.11.8.3) The Contractor shall be responsible for the adequate support and protection of the highway being crossed and damage resulting from disturbance to adjacent property and facilities affected by the work. If loose material is encountered and cave-ins occur or are anticipated, all operations shall be discontinued; shoring approved by the City Public Works

Department or the Virginia Department of Transportation shall be installed; and all voids filled by pressure grouting or other approved methods before work is continued.

(4.4.11.8.4) During the tunneling operation, care shall be exercised in trimming the surface of the excavated section such that the steel liner plates fit snugly against undisturbed material. Excavation shall not be advanced ahead of the previous installed liner plates any more than is necessary for the installation of the succeeding liner plate. The vertical face of the excavation shall be supported as necessary to prevent sloughing. Rock excavation encountered in the work shall be removed by means of air hammers and in such a manner as to minimize the occurrence of voids outside the liner plates. At any interruption of the tunneling operation, the heading shall be completely bulk headed. If required by the City Public Works Department or the Virginia Department of Transportation, the tunneling shall be conducted continuously, on a 24-hour basis, at no additional cost to the Owner. A uniform mixture of Portland cement grout shall be placed under pressure behind the liner plates to fill any voids existing between the liner plate and the undisturbed material.

Grouting shall start at the lowest hole in each grout panel and proceed upward simultaneously on both sides of the tunnel. A threaded plug shall be installed in each grout hole as the grouting is completed at that hole. Grouting shall be kept as close to the heading as possible, using grout stops behind the liner plates if necessary. Grouting shall proceed as directed by the representative of the City Public Works Department or the Virginia Department of Transportation or the Director, but in no event shall more than four linear feet of tunnel be progressed beyond the grouting nor shall any length of tunnel be allowed to stand un-grouted overnight. The tunnel liner plate encasing conduits may require a shield when soil or other conditions indicate its need.

(4.4.11.8.5) After the tunnel is installed, Class D concrete shall be placed on the bottom of the tunnel as shown on the drawings. The surface of the concrete shall receive a hand-troweled finish until a smooth surface is achieved.

(4.4.11.9) Pipe Installation - Standard Casing Installation

(4.4.11.9.1) Crossings of Interstate Highways, railroads, gas or petroleum pipelines protected by impressed current and when designated may include cathodic protection measures as specified herein.

(4.4.11.9.2) Insulated casing spacers shall be affixed to the carrier pipe as it is installed in the encasing conduit. Spacers shall be as specified in the Public Utilities Product Manual, shall be properly sized for the conduit and carrier pipe diameters, and shall include offsets as necessary for the carrier

pipe bell. Spacers shall be spaced equally to provide three spacers per pipe section or as otherwise recommended by the manufacturer and approved by the Director.

(4.4.11.9.3) Encasing conduit ends shall be closed with an approved end seal as specified in the Public Utilities Product Manual and sized for the specific outside diameters of carrier and encasing conduit. Provisions to vent and/or drain the encasing conduit may be required by the Director on a case by case basis.

(4.4.11.9.4) Water main and sewer main, once installed, shall be tested by the contractor for leakage.

(4.4.11.10) Pipe Installation – Liner Plate Tunnel Installation

(4.4.11.10.1) Carrier pipe shall be installed in the encasing conduit by banding bolted oak wood or other approved skids at 6-foot centers to the pipe and sliding the pipe into place. Care shall be taken to protect the exterior coating of the carrier pipe when attaching the skids and during installation of the pipe.

(4.4.11.10.2) Pressurized carrier pipes such as water mains and force mains shall be restrained within the liner plate tunnel to prevent excessive movement. The designer shall submit a plan for restraint to the Director for review and approval.

(4.4.11.10.3) Sand fill requirements may be waived by the Director of Public Utilities when a satisfactory alternative restraint design is provided. After the pipeline has been installed in the encasing conduit, the Contractor shall fill the void between the carrier pipe and the encasing conduit completely with sand. The sand shall be placed via forced air through tubes extending into the encasing conduit. The nozzle end of the placing tube shall be turned up to avoid damaging the pipe's coating. The ends of the encasing conduit shall then be sealed with an approved end seal as specified in the Public Utilities Product Manual or brick masonry bulkheads as directed. Provisions to vent and/or drain the encasing conduit may be required by the Director on a case by case basis.

(4.4.11.10.4) Brick for closing the ends of encasing conduits shall be new, whole bricks of uniform standard commercial size with straight parallel edges and square corners. Brick shall conform to the requirements of ASTM Designation C62, and shall be grade MW or better. Mortar for laying brick shall be composed of one part cement, two parts sand, and water.

(4.4.11.10.5) Water main and sewer main, once installed, shall be tested by the contractor for leakage.

(4.4.12) Construction Drawing Plan View

(4.4.12.1) The construction drawings shall be prepared with adequate information to describe the proposed water and sewer mains. The information provided shall include but not be limited to the following:

(4.4.12.1.1) Water Mains

A. Plans shall address all issues listed in the Site Plan Requirements located in Appendix B of this manual

B. Plans shall address all applicable issues listed in the Supplemental Site Plan Check List for Water and Sewer Main Extensions located in Appendix C of this manual

C. Alignment and stationing

D. Pipe size

E. Pipe material

F. Horizontal location/separations

G. Water main appurtenances

H. Special views; enlarged plan views or detailed dimensional layouts

(4.4.12.1.2) Sanitary Sewer Mains

A. Plans shall address all issues listed in the Site Plan Requirements located in Appendix B of this manual

B. Plans shall address all applicable issues listed in the Supplemental Site Plan Check List for Water and Sewer Main Extensions located in Appendix C of this manual

C. Alignment and stationing

D. Pipe size

E. Pipe material

F. Manhole labels, top elevations, invert elevations (in, out, and drop connections), city block map designations for existing manholes

G. Horizontal location/separations

H. Special views; enlarged plan views or detailed dimensional layouts

4.5 Design Criteria and Profile Requirements for Construction Drawings: Water And Sewer Main Extensions

(4.5.1) Cover Depth - All water mains shall have a minimum cover of three feet and a maximum cover of eight feet, measured from the top of pipe to the proposed finished grade directly above the water main.

(4.5.2) Conflicts With Utilities Shall Be Shown In Profile And:

(4.5.2.1) If passing the water main under other utilities would cause cover to exceed the eight-foot maximum, then the water main should be routed over the conflicting utilities as long as the minimum cover at the highest relative point of the water main is three feet.

(4.5.2.2) The Director may approve water main depths deeper than eight feet due to other utility conflicts and/or unusual topographic conditions, provided the designer provides adequate pipe strength calculations and makes provisions for access to the water main without undermining the overlying utility.

(4.5.2.3) Underground utilities (electric, telephone, gas, storm, etc.) shall provide an absolute minimum 8 inches clearance with water and sewer pipe barrels and 18 inches clearance within two feet of the joint. Where water or sewer mains cross beneath box culverts or pipes 30” or larger, the water and sewer pipe shall be encased in a steel casing pipe. Designer shall provide calculations confirming the allowable vertical separation between the casing and other structures and detail the crossing on the plans.

(4.5.3) Water-Sewer Main In Parallel Arrangement Shall Be Shown In Profile:

When local conditions prevent a horizontal separation of ten feet, the water main may be laid closer to the sewer pipe or sewer manhole provided that:

(4.5.3.1) The bottom (invert) of the water main shall be at least eighteen inches above the top (crown) of the sewer.

(4.5.3.2) Where the vertical separation cannot be obtained, the sewer shall be constructed of AWWA approved water pipe, pressure tested to 30 psi in place without leakage prior to backfilling; and

(4.5.3.3) The sewer manholes shall be watertight construction and tested in place.

(4.5.4) Water-Sewer Main Crossings Shall be Shown In Profile on the Drawings. For Installation of Water Mains Crossing Sanitary Sewers, The Following Provisions Apply:

(4.5.4.1) Normal Conditions – Water Mains crossing sewers shall be laid to provide a separation of at least 18 inches between the bottom (invert) of the water main and the top (crown) of the sewer whenever possible.

(4.5.4.2) Unusual conditions – when local conditions prevent a vertical separation described above, the following construction shall be used:

(4.5.4.2.1) Sewers passing over or under water lines shall be constructed of the materials required for water main construction. Sewers shall also be pressure tested to 30 psi in place without leakage prior to backfilling. The requirement for leak proof installation shall be indicated on the plan.

(4.5.4.2.2) Water lines passing under sewers shall, in addition, be protected by providing:

A. A vertical separation of at least 18 inches between the bottom of the sewer and the top of the water line.

B. Adequate structural support for the sewers to prevent excessive deflection of the joints and the settling on and the breaking of the water line;

AND

C. That the length of the water and sewer lines be centered at the point of the crossing so that joints shall be equidistant and separated as far as possible.

(4.5.5) Construction Drawing Profile View

(4.5.5.1) The construction drawings shall be prepared with adequate information to describe the proposed water and sewer mains. The information provided shall include but not be limited to the following:

(4.5.5.1.1) Water Mains

A. Plans shall address all issues listed in the Site Plan Requirements located in Appendix B of this manual

B. Plans shall address all applicable issues listed in the Supplemental Site Plan Check List for Water and Sewer Main Extensions located in Appendix C of this manual

C. Alignment and stationing

D. Pipe size

E. Pipe material

F. Vertical location/separations

G. Water main appurtenances

H. Special conditions, underwater crossings, highway and railway bores,

I. Special views, detailed elevations or cross sections

(4.5.5.1.2) Sanitary Sewer Mains

A. Plans shall address all issues listed in the Site Plan Requirements located in Appendix B of this manual

B. Plans shall address all applicable issues listed in the Supplemental Site Plan Check List for Water and Sewer Main Extensions located in Appendix C of this manual

C. Alignment and stationing

D. Pipe size (each section between manholes)

E. Pipe material (each section between manholes)

F. Pipe slope (each section between manholes)

G. Manhole labels corresponding to plan view

H. Manhole elevations;
   1. top,
   2. invert(s) in,
   3. drop invert(s) in,
   4. invert out,

I. Vertical location/separations

J. Existing and finished grade profile

K. 100 year flood elevation

L. Special conditions, underwater crossings, highway and railway bores

M. Special views, detailed elevations or cross sections,

4.6 Pumping Design For Water Distribution And Sewerage Transmission:

(4.6.1) Inter-Agency Approval

(4.6.1.1) Water: No developer shall cause or allow the construction or change in the manner of pumping of any water system common to the City of Harrisonburg without a written construction permit from the Virginia Department of Health and the City of Harrisonburg. In addition, approvals shall be required from the City Building Inspections Office for building, plumbing and electrical design. All submittal information to these agencies and the certificates of approval shall be required prior to approval of a site plan.

(4.6.1.2) Sewer: No developer shall cause or allow the construction *or* change in the manner of pumping of any sewerage system common to the City of Harrisonburg without a written construction permit from the Department of Environmental Quality and the City of Harrisonburg. In addition, plans shall also be approved by the City Building Inspections Office for building, plumbing, and electrical design. All submittal information to these agencies and the certificates of approval shall be required prior to approval of a site plan.

(4.6.2) Criteria for Configuration

(4.6.2.1) Water booster stations shall be above ground facilities constructed from concrete masonry units or pre-cast/cast-in-place concrete. The facility shall be of aesthetic quality acceptable to the Director of Public Utilities as determined on a case-by-case review.

(4.6.2.2) Sanitary sewer pump stations shall be below ground type structures of combination wet well and dry well type configuration. Construction shall be of pre-cast/cast -in-place concrete or steel and designed acceptable for the application backfill load requirements.

(4.6.3) Design

(4.6.3.1) Water Pumping Stations

(4.6.3.1.1) Location

Water pump stations shall be located as far as practical from present or proposed built-up residential areas, and an all-weather access road shall be provided. Water pumping stations shall be constructed on property with fee simple conveyance to the City of Harrisonburg, VA and access by the same or dedicated ingress and egress easement. The Director of Public Utilities shall approve the size and layout on a case-by-case review. Stations may be required to have a 100 feet zone of controlled or limited use surrounding them. Within such zones, residential uses or high-density human activities or activities involving food preparation may be prevented. Noise control, odor control and station architectural design shall be taken into consideration. Sites for stations shall be of sufficient size for future expansion or addition, if applicable. The station's operational components shall be located at an elevation, which is not subject to the 100-year flood/wave action or shall otherwise be adequately protected against the 100-year flood/wave action damage. The stations shall be designed to remain fully operational during the 25-year flood/wave action.

(4.6.3.1.2) Structures

Pump stations associated with finished water shall be above ground buildings and shall:

A. Have adequate space for the installation of additional units if needed, and for the safe servicing of all equipment,

B. Be of durable construction, fire and weather resistant, and with outward opening doors,

C. Have the floor elevation at least six inches above the finished grade if possible,

D. Have the underground structure waterproofed,

E. Have all floors drained without impairing the quality of water being handled, and, if equipment is contained on the floor, the floor shall slope at least 1/8 inch in every foot to the point of discharge,

F. Provide suitable outlet for drainage from pump glands without discharging onto the floor.

(4.6.3.1.3) Equipment servicing in pump stations=

A. Crane ways, hoist beams, eyebolts, or other adequate facilities for servicing or removal of pumps, motors, or other heavy equipment shall be provided.

B. Walkways shall be provided to lubrication points of equipment if these are located at intermediate points between floors.

C. Openings in floors, roofs or wherever else needed for removal of heavy or bulky equipment shall be provided.

D. A convenient tool board or other facilities shall be provided as needed for proper maintenance of the equipment.

(4.6.3.1.4) Stairways and ladders - Stairs are preferred in areas where there is frequent traffic or where supplies are transported by hand. They shall have risers not exceeding 7 inches and treads wide enough for safety. Where ladders are used, intermediate landings should be provided if the vertical distance exceeds 10 feet. Stairways and ladders shall:

A. Be provided between all floors, in pits or compartments which must be entered, and

B. Have handrails on both sides, and treads of non-slip material.

(4.6.3.1.5) Heating - In pump houses not occupied by personnel, only enough heat need be provided to prevent freezing of equipment or treatment process. Provisions shall be made for adequate heating for the comfort of the operator and the safe and efficient operation of the equipment.

(4.6.3.1.6) Ventilation - Adequate ventilation shall be provided for all pumping stations. Forced draft ventilation of at lease six changes of air per hour (continuous operation) shall be provided for:

A. All rooms, compartments, pits and other enclosures below the grade floor, and

B. Any area where an unsafe atmosphere may develop or where excessive heat may build up.

(4.6.3.1.7) Dehumidification - Means for dehumidification shall be provided. Considerations shall be given to providing dehumidification in the area of electrical and electronic controls and instrumentation.

(4.6.3.1.8) Lighting - Pump stations shall be adequately lighted throughout both inside and outside. All electrical work shall conform to the requirements of the National Electric Code.

(4.6.3.1.9) Pumps - At least two pumping units, of brand acceptable to the Director based on compatibility with current inventory, performance and service support, shall be provided. If only two units are provided, each shall be capable of delivering the peak demand. If more than two units are installed, they shall have sufficient capacity so that if any one pump is out of service, the remaining pumps are capable of carrying the peak demand. The pumping units shall:

A. Have ample capacity to supply the peak demand without overloading,

B. Be driven by a prime mover able to operate against the maximum head and air temperature, which may be encountered,

C. Have maintenance parts and tools readily available.

(4.6.3.1.10) Booster pumps, except those connected to supply mains not containing service connections and except those taking suction directly from storage facilities, shall be located or controlled so that:

A. They will not produce negative pressure in their suction line,

B. The intake pressure shall be at least 20 psi when the pump is in normal operation,

C. An automatic pressure cutoff or a pressure regulating valve shall be provided to prevent suction line pressure from dropping to below 10 psi, and

D. Automatic or remote control devices shall have a range between the start and cutoff pressure, which will prevent excessive cycling.

E. In addition to the other requirements of this section, inline booster pumps shall be accessible for servicing and repairs.

(4.6.3.1.11) Controls - Water pumping stations shall be designed with a primary SCADA controlled system and shall have a secondary system which will operate in the event of SCADA component failures. SCADA requirements and secondary requirements shall be at the discretion of the Director of Public Utilities. Pumps, their prime movers, and all accessories, shall be controlled in such a manner that they will operate at their rated capacity without overloading or without excessive starts per hour. Where two or more pumps are installed, provision shall be made for proper alternation. Alternation shall be automatic. Provision shall be made to prevent operation of the pump during the backspin cycle. Electric controls shall be located above grade.

(4.6.3.1.12) Alarms - All automatic stations shall be provided with an automatic signaling apparatus which will report by local alarm (audio and video) and by SCADA Signal, the latter to a facility manned 24 hours per day when the station is out of service. Installation of electrical equipment shall conform with the appropriate State and National Electrical Codes. Alarms and other arrangements shall be approved by the Director of the Department of Public Utilities.

(4.6.3.1.13) Appurtenances

A. Valves - Pumps shall be adequately valved to permit satisfactory operation, maintenance, and repair of the equipment. Each pump shall have a positive acting check valve on the discharge side between the pump and shutoff valve. Automatic pump control valves may be required by the Director to assure protection against surge and hammer.

B. Piping - In general, piping shall:

1. Be designed so that the friction head will be low, and shall be ductile iron conforming to buried water main specifications except use flange joint. The velocity in the suction line shall not exceed 6 feet per second and the velocity in the discharge line shall not exceed 8 feet per second.

2. Not be subject to contamination,

3. Be sloped in one direction to drains,

4. Have adequate cleanouts,

5. Have watertight joints,

6. Be protected or braced against surge or water hammer,

7. Be such that each pump has an individual suction line or the lines shall be attached to a manifold that will insure similar hydraulic and operational conditions, and

8. Have proper legends to identify the contents of the pipes.

C. Gauges and meters - The station shall have indicating, totalizing, and recording metering of the total water pumped. Each pump shall:

1. Have a pressure gauge on its discharge line as approved by the Director of Public Utilities,

2. Have a compound gauge on its suction line as approved by the Director of Public Utilities. Have recording gauges in the larger stations as required by the Director of Public Utilities.

D. Water seals -Water seals shall not be supplied with water of a lesser sanitary quality than that of the water being pumped. Where pumps are sealed with potable water and are pumping water of lesser sanitary quality, the seal shall:

1. Be provided with a break tank open to atmospheric pressure, and

2. Have an air gap between feeder line and spill line of the tank, at least two inches or two pipe diameters, whichever is greater.

(4.6.3.1.14) Continuous Operability

A. Pump stations shall be equipped with an auxiliary stand-by generator, which can operate sufficient pumps to deliver the design peak flow. The unit shall be propane, natural gas, or diesel fueled with appropriately sizes load bank and automatic transfer switch of brand and model common to the Department of Public Utilities working inventory or acceptable to the Department's Director.

B. A pump hose connection arrangement shall be provided from suction line to discharge line such that a portable pump could be used if necessary.

C. All pumping and control equipment shall conform to criteria as outlined in Section 4.6.3.2 below, however, pertaining to water pumping station.

(4.6.3.1.15) Chlorination

Chlorination injection facilities shall be installed pursuant to the latest Virginia Waterworks Regulations where deemed necessary by the Director of Public Utilities.

(4.6.3.1.16) Instructions and Equipment

At least two complete sets each of operational instructions, equipment and maintenance manuals, and emergency procedures shall be supplied. The manuals shall also contain drawings of equipment and a numbered parts list keyed to a list of components. Tools and such spare parts that may be needed shall be supplied with each station.

(4.6.3.1.17) Vandalism

Pump stations shall be designed and maintained in a manner to be secure against vandalism. Locks shall be keyed to the City's lock scheme. Exterior protection fences shall be required.

(4.6.3.2) Sewage Pumping Stations

(4.6.3.2.1) Location

Sewage pump stations shall be located as far as practicable from present or proposed built-up residential areas, and all-weather road shall be provided. Sewage pumping stations shall be constructed on property with fee simple conveyance to the City of Harrisonburg, VA and access by the same or dedicated ingress/egress easement. The Director of Public Utilities shall approve the size and layout on a case-by-case review. Stations shall have a 100 feet radius zone of controlled or limited use surrounding them. Within such zones, residential uses or high-density human activities or activities involving food preparation shall be prevented. Noise control, odor control and station architectural design shall be taken into consideration. Sites for stations shall be of sufficient size for future expansion or addition, if applicable. The station's operational components shall be located at an elevation, which is not subject to the 100-year flood/wave action or shall otherwise be adequately protected against the 100-year flood/wave action

damage. The stations shall be designed to remain fully operational during the 25year flood/wave action.

(4.6.3.2.2) Structures

Pump stations shall be below ground vault structures with separate wet well-dry well arrangement:

A. Pump and Motor Removal

Provisions shall be made to provide pre-cast concrete or cast-in-place concrete structures which have been designed to withstand backfill as necessary; the design shall be sealed, signed and dated by an engineer licensed to do such work in the State of Virginia.

B. Access

Suitable and safe means of access shall be provided to dry wells and wet wells containing equipment requiring inspection or maintenance. Rest landings shall not exceed 10 feet vertical intervals.

C. Dry Well Dewatering

Two sump pumps on separate circuits shall be provided in the dry well to remove leakage or drainage with the discharge above the high water level of the wet well. Sump pump discharge piping shall have a watertight seal in both the wet well and drywell wall penetrations. Water ejectors connected to a potable water supply will not be approved for dewatering. All floor and walkway surfaces shall have an adequate slope to a point of drainage.

D. Wet Wells

1. Divided Wet Wells
The wet wells at all pumping stations shall be divided into two sections properly interconnected to facilitate repairs and cleaning.

2. Size
The effective capacity of the wet well shall be such that one pump will run continuously at least five minutes of every 30 minute period at the minimum flow.

3. Fillet Slope
   The wet well fillets shall have a minimum slope of one to one to the hopper bottom. The horizontal area of the hopper bottom shall be no greater than necessary for proper installation and function of the inlet. The outside of the vaults shall be waterproofed.

(4.6.3.2.3) Equipment Servicing in Pump Stations

A. Pumps

   Pumps which are to be installed in a dry well, shall be the type manufactured for submersible application but modified for dry well installation. Provisions shall be made to facilitate removing pumps, motors and other equipment without interruption of system service.

B. Pump Removal

   Pumps shall be provided with equipment for disconnecting, removal and reconnection of the pump without requiring personnel to enter the wet well.

C. Hoist Provision

   Pumping facilities shall be provided a hoist and accessories for removing the pump*s* from the dry well. The hoist shall match the system currently used by the City work forces.

(4.6.3.2.4) Stairways and Ladders - Stairs are preferred in areas where there is frequent traffic or where supplies are transported by hand. They shall have risers not exceeding 7 inches and treads wide enough for safety. Where ladders are used, intermediate landings should be provided if the vertical distance exceeds 10 feet. Stairways and ladders shall

A. Be provided between all floors, in pits or compartments which must be entered, and

B. Have handrails on both sides, and treads of non-slip material.

(4.6.3.2.5) Heating - In pump houses not occupied by personnel, only enough heat need be provided to prevent freezing of equipment or treatment process. Provisions shall be made for adequate heating for the

comfort of the operator and the safe and efficient operation of the equipment.

(4.6.3.2.6) Ventilation

Ventilation shall be provided for all pump stations during all periods when the station is manned. Where the pump is below the ground, mechanical ventilation is required and shall be arranged so as to independently ventilate the dry well. If screens or mechanical equipment, which might require periodic maintenance and inspection, are located in the wet well, then it shall also be mechanically ventilated. There shall be no inter-connection between the wet well and the dry well ventilation systems. In pits over 15 feet deep, multiple inlets and outlets are required. Dampers shall not be used on exhaust or fresh air ducts, and fine screens or other obstructions in air ducts shall be avoided to prevent clogging. Switches for operation of ventilation equipment shall be marked and conveniently located above grade and near pump station entrance. Consideration shall be given also to automatic controls where intermittent operation is used. The fan wheel shall be fabricated from non-sparking material. Consideration shall be given to installation of automatic heating and/or dehumidification equipment. Where heat buildup from pump motors may be a problem, consideration shall be given to automatic ventilation to dissipate motor heat.

A. Wet Wells

Ventilation may be either continuous or intermittent. Ventilation, if continuous, shall provide at least 12 complete air changes per hour if intermittent, at least 30 complete air changes per hour. Such ventilation shall be accomplished by mechanical means.

B. Dry Wells

Ventilation may be either continuous or intermittent. Ventilation, if continuous, shall provide at least twelve complete air changes per hour; if intermittent, at least 30 complete air changes per hour.

(4.6.3.2.7) Dehumidification - Means for dehumidification shall be provided. Considerations shall be given to providing dehumidification in the area of electrical and electronic controls and instrumentation.

(4.6.3.2.8) Lighting - Pump stations shall be adequately lighted throughout both inside and outside. All electrical work shall conform to the requirements of the National Electric Code.

(4.6.3.2.9) Pumping Unit

A. Grit

Where it may be necessary to pump sewage prior to grit removal, the design of the wet well shall receive special attention, and the discharge pumping shall be designed to prevent grit settling in pump discharge lines of pumps not operating.

B. Pumping Rates and Number of Pumping Units

At least two pumping units shall be provided. Where two units are provided, each shall be capable of handling flows in excess of the expected maximum flow or a minimum of 2.5 times the average design flow, whichever is greater. Where three or more units are provided, they-shall be designed to fit actual flow conditions and must be of such capacity that with any one unit out of service, the remaining units will have capacity to handle the maximum sewage flow or a minimum of 2.5 times the average design flow, whichever is greater. When the station is expected to operate at a flow rate less than 0.5 times the average design flow for an extended period of time, the design shall address measures taken to prevent septicity due to long holding times in the wet well.

C. Protection Against Clogging

Pumps handling raw sewage shall be preceded by readily accessible bar racks or trash basket with clear openings not exceeding 2 1/2 inches. Grinder pumps and pneumatic ejectors will not be permitted.

D. Pump Openings

Pumps in which the solids pass through the impeller(s) shall be capable of passing spheres of at least three inches in diameter. Pumping equipment having integral screens for preventing solids from passing through the impeller shall be capable of passing spheres of at least two inches in diameter. Pumping equipment preceded by grinding equipment shall be capable of passing the solids discharged from the grinding mechanism.

E. Priming

The pump shall be so placed that under normal start conditions it will start with a positive suction head.

F. Intake

Each pump shall have an individual intake. Wet well design shall be such as to avoid turbulence near the intake.

(4.6.3.2.10) Water Supply

There shall be no physical connection between any potable water supply and a sewage pump station, which under any conditions might cause contamination of the potable water supply.

(4.6.3.2.11) Controls

Control floats shall be so located as not to be affected by the flows entering the wet well or by the suction of the pumps. Float tubes will not be permitted in either the wet or dry well. Provisions shall be made to automatically alternate the pumps in use. Pump stations with motors and/or controls below grade shall be equipped with a secure external disconnect switch.

(4.6.3.2.12) Alarm Systems

An alarm system to signal high and low liquid levels in the wet well and high liquid level in the dry well shall be provided for all pump stations. The alarm system shall also monitor the power supplies to the station, the auxiliary power source, failure of pump motors to start and a test function. A local audible alarm shall be provided and a SCADA telemetry installation acceptable to the Director shall signal to locations where personnel competent to receive the alarm and cause corrective action to be initiated are available 24 hours per day.

A back up power supply such as a battery pack with an automatic switchover feature shall be provided for the alarm system, such that a failure of the primary power source would not disable the alarm system. Test circuits shall be provided to enable the alarm system to be tested and verified to be in good working order.

(4.6.3.2.13) Valves and Piping Appurtenances

A. Valves- Pumps shall be adequately valved to permit satisfactory operation, maintenance, and repair of the equipment. Each pump shall have a positive acting check valve on the discharge side between the pump and shutoff

valve. Automatic pump control valves may be required by the Director to assure protection against surge and hammer.

B. Piping – In general, piping shall:

1. Be designed so that the friction head will be low, and shall be ductile iron conforming to buried water main specifications except use flange joint. The velocity in the suction line shall not exceed 6 feet per second and the velocity in the discharge line shall not exceed 8 feet per second.

2. Be sloped in one direction to drains,

3. Have adequate cleanouts

4. Have watertight joints,

5. Be protected or braced against surge or water hammer,

6. Be such that each pump has an individual suction line, and

7. Have proper legends to identify the contents of the pipes.

C. Gauges and meters - The station shall have indicating, totalizing, and recording metering of the total water pumped. Each pump shall:

1. Have a pressure gauge on its discharge line as approved by the Director of Public Utilities,

2. Have a compound gauge on its suction line as approved by the Director of Public Utilities,

3. Have recording gauges in the larger stations as required by the Director of Public Utilities.

D. Water seals - Water seals shall not be supplied with water of a lesser sanitary quality than that of the water being pumped. Where pumps are sealed with potable water and are pumping water of lesser sanitary quality, the seal shall:

1. Be provided with a break tank open to atmospheric pressure, and

2. Have an air gap between feeder line and spill line of the tank, at least two inches or two pipe diameters, whichever is greater.

(4.6.3.2.14) Reliability

A. Objective

The objective of reliability is to prevent the discharge of raw or partially treated sewage to any waters and to protect public health by preventing back-up of sewage and subsequent discharge to basements, streets and other public and private property.

B. Provision of Continuous Operability

Each of the following means for provision of continuous operability shall be provided:

1. An auxiliary stand-by generator, which can operate sufficient pumps to deliver the design peak flow. The unit shall be propane, natural gas, or diesel fueled with appropriately sized load bank and automatic transfer switch of brand and model common to the Department of Public Utilities or acceptable to the Department Director.

2. The following electrical power sources, supplied by electric power utility companies, shall be acceptable to satisfy the continuous operability requirements when switching, load transfers, circuit ties, line or transformer repairs, etc., are incurred single source feed is acceptable.

3. The force main shall be equipped with an emergency connection such that the City of Harrisonburg can use emergency portable pump equipment.

C. Equipment Type

Electrical equipment in enclosed places where flammable liquid, gas or dust may accumulate shall comply with the NFPA 497M Manual for Classification of Gases, Vapors, and Dusts for Electrical Equipment in Hazardous (classified) Locations, Latest Edition.

Three phase motors and their starters, shall be protected from electric overload and short circuits on all three phases.

Large motors shall have a low voltage protection device for protection on all three phases of 3-phase motors, which on the reduction or failure of voltage will cause and maintain the interruption of power to that motor.

Consideration shall be given to the installation of temperature detectors in the stator and bearings of large motors in order to give an indication of overheating problems.

Wires in underground conduits or in conduits that may be flooded shall have moisture resistant insulation as identified in the National Electric Code.

Concrete, metals, control and operating equipment, and safety devices shall, insofar as practical, be designed to protect against corrosion.

D. Provisions for Equipment Testing

Provisions shall be included in the design of equipment requiring periodic testing, to enable the tests to be accomplished while maintaining electric power to all vital components. This requires being able to conduct tests such as actuating and resetting automatic transfer switches and starting and loading emergency generating equipment. The electric distribution system and equipment shall be designed to facilitate inspection and maintenance of individual items without interruption of operations.

1. Emergency Power Generator Starting

   The means for starting an on-site emergency power generator shall be completely independent of the normal electric power source. Batteries used for starting shall have a sufficient charge to permit starting the generator engine a minimum of three times without recharging. The starting system shall be appropriately alarmed and instrumented to indicate loss of readiness.

2. Controlled Diversion

The provision of a high-level wet well controlled diversion to supplement alarm systems and emergency power generation shall be considered. If a high-level wet well, controlled diversion is utilized, the overflow elevation shall be such that the maximum feasible storage capacity of the wastewater collection system shall be used before the controlled diversion is used.

Where such controlled diversions affect critical waters, a storage-detention basin or tank sized in accordance with the pump stations operating conditions and the constraints and conditions applicable to the owner's repair and maintenance capabilities shall be provided, having not less than six hours detention capacity at the anticipated flow diversion rate.

Prevention of Overflows in Critical areas: Additional provisions for protection against overflows in critical areas may be required.

(4.6.3.2.15) At lease two complete sets each of operational instructions, equipment and maintenance manuals, and emergency procedures shall be supplied. The manuals shall also contain drawings of equipment and a numbered parts list keyed to a list of components. Tools and such spare parts that may be needed shall be supplied with each station.

(4.6.3.2.16) Vandalism

Pump stations shall be designed and maintained in a manner to be secure against vandalism. Locks shall be keyed to the City's lock scheme. Exterior protection fences shall be required.

(4.6.3.2.17) Force Mains

A. Size

Minimum size force mains shall be not less than four inches

B. Velocity

At pumping capacity, a minimum self-scouring velocity of two feet per second shall be maintained unless flushing

facilities are provided. A velocity of eight feet per second should not be exceeded.

C. Termination

The force main should enter the receiving manhole with its center-line horizontal and with an invert elevation which will preferably ensure a smooth flow transition to the gravity flow section, but in no case shall the force main enter the gravity sewer system at a point more than one foot above the flow line of the receiving manhole. The force main shall be designed with a curved section outside of the receiving manhole to prevent air from traveling up into the force main. The design shall especially prevent turbulence at this point.

Attention should be given to the use of inert materials or protective coatings for the receiving manhole to prevent deterioration as a result of hydrogen sulfide or other chemicals.

D. Materials of Construction and Appurtenances

Conform to water main specifications as permitted within the City of Harrisonburg, VA. PVC and HDPE pressure pipe may be considered on a case-by-case basis.

(4.6.3.2.18) Other Issues and Clarity

The Department shall use Water Pollution Control Federation Manual of Practice No. FD-4 (Design of Wastewater and Storm Water Pumping Stations, Latest Edition), for additional criteria.

(4.6.4) Requirements For Presentation In Construction Drawings

Plans shall be prepared to include the following but not limited to:

(4.6.4.1) Site Plan of Pump Station (Scale 1"-10') with 1' contour intervals and spot elevations.

(4.6.4.2) Plan View Pump Station Layout

(4.6.4.3) Elevation View Pump Station Layout

(4.6.4.4) Construction Details

(4.6.4.4.1) Access hatch or door schedule

(4.6.4.4.2) Typical, emergency pump connection

(4.6.4.4.3) Hoist detail - including separate socket mounts to access trash basket and pumps

(4.6.4.4.4) Pump station wiring diagram

(4.6.4.4.5) Power riser diagram

(4.6.4.4.6) Generator wiring diagram and pad mounting

(4.6.4.4.7) Heating, ventilation and lighting schedule

(4.6.4.4.8) Yard layout electrical diagram

(4.6.4.4.9) Electrical equipment mount detail

(4.6.4.4.10) Fence construction

(4.6.5) Requirements for Construction Specifications

Plans as stated previously shall be accompanied by specifications including but not limited to:

(4.6.5.1) Pumps (brand acceptable to Director based on compatibility with current inventory, performance and service support)

(4.6.5.2) Pump station wet well, dry well and other underground structures.

(4.6.5.3) Pump hoist

(4.6.5.4) Access hatches or doors

(4.6.5.4) Control system

(4.6.5.6) Electrical system

(4.6.5.7) Float system or gauge system

(4.6.5.8) Emergency Generator (brand acceptable to Director based on compatibility with current inventory, performance and service support)

(4.6.5.9) Telemetry System (brand acceptable to Director based on compatibility with current inventory, performance and service support)

(4.6.5.10) Fence

(4.6.5.11) Backflow preventor/frost proof yard hydrant assembly

(4.6.6) Submittals Prior To Construction Of Sanitary Sewer Pump Stations

(4.6.6.1) Product data: Prior to construction, the developer or his agent shall submit the following items to the Engineer. The design engineer, upon approval, shall forward the stamped submittals to the City Department of Public Utilities for approval and return.

(4.6.6.2) Summary checklist of required submittals are as follows

(4.6.6.2.1) Pumps

(4.6.6.2.2) Pump station vault structures

(4.6.6.2.3) Pump hoist and access hatches to both the pump station and valve vault and also trash basket

(4.6.6.2.4) Pumps and all internal mechanical equipment, floats, piping, etc.

(4.6.6.2.5) Emergency generator

(4.6.6.2.6) All electrical panel, switches, and water controllers, etc.

(4.6.6.2.7) Telemetry system

(4.6.7) Final Inspection

(4.6.7.1) **Substantial Completion:** A certificate of substantial completion shall be issued by the City of Harrisonburg and the responsible design engineer cooperatively after completion of a final inspection and remediation of determined punch list items pursuant to Item 1.3.10 of this Manual. The issuance of this substantial completion shall designate the beginning of perpetual maintenance by the City except for electric and power cost as defined below. The final inspection shall include, but is not limited to:

(4.6.7.1.1) Pump Test

The pump manufacturer shall perform the following inspections and tests on each pump as follows:

A. Prior to operation, the pump shall be run dry to establish correct rotation and mechanical integrity.

B. Upon completion of the installation and adjustment of the equipment in a manner satisfactory to the Engineer and the City of Harrisonburg, the contractor shall designate a day for testing all equipment. The tests shall be limited to a period of 24 hours and shall be a demonstration that all performance requirements have been met. A field drawdown test or output test shall be performed to determine pump capacity and electrical draw. Prior to the tests, the contractor shall give the City of Harrisonburg five (5) days written notice.

C. During the tests, the pump manufacturer's personnel shall supervise the operation of the equipment and assist or train the City of Harrisonburg operating personnel. Experts on equipment installation and operation as necessary, as well as written complete detailed erection, operation and maintenance instructions shall be furnished by the Contractor to insure proper training and instructions of the City's personnel.

D. Upon completion of items above, the pump manufacturer shall provide the City of Harrisonburg a written statement addressing the referenced conditions.

(4.6.7.1.2) Electrical Test

A. The contractor shall provide to the City Department of Public Utilities verification of approval as issued by the City Building Inspections Office referring to electrical installation.

B. The electrical manufacturer shall perform an inspection and start-up pursuant and simultaneous to Item 4.6.7.1.1 above. This shall include remote and central (PEI at WTP) operations.

C. The electrical manufacturer shall provide the City a written statement addressing the referenced conditions.

(4.6.7.1.3) Telemetry Test

The telemetry manufacturer shall perform an inspection and start-up pursuant and simultaneous to Items 4.6.7.1.1 and 4.6.7.1.2 above.

(4.6.7.1.4) Final Inspection

All items shall be completed such to conduct a final inspection for the purpose of preparing a final punch list. City Department of Public Utilities personnel, the developer or his agent and all design personnel shall be on-site during final inspection.

(4.6.8) Facility Acceptance

(4.6.8.1) Commencement Of Operation And City Maintenance

Prior to placing station into operation and perpetual maintenance by the City, the design engineer shall provide:

(4.6.8.1.1) Certificate of substantial completion, punch list signed by design engineer, and mutually agreeable to the City.

(4.6.8.1.2) Certificate to operate as issued by Virginia Department of Health, Department of Environmental Quality or Harrisonburg-Rockingham Regional Sewer Authority.

(4.6.8.1.3) Certificates of approval from City Inspector's Office, building, electrical and plumbing.

(4.6.8.1.4) Maintenance Bonds (See Chapter 1)

(4.6.8.1.5) Operation and Maintenance Manual (City Approval only)

(4.6.8.2) Total Acceptance

Prior to placing electrical or telephone cost into the City name:

(4.6.8.2.1) Punch list items complete

(4.6.8.2.2) As-built drawings

(4.6.8.2.3) Operation and Maintenance Manual (Approved by VDH)