Water and Sewer Utilities Construction Standards

Table of Contents

Chapter 7

PART ONE CONSTRUCTION PROCEDURES AND MATERIALS

CONTRACTOR'S GUIDELINE FOR INSTALLATION OF BURIED WATER AND SEWER UTILITIES

7.1 Contractor Responsibilities

(7.1.1) Miss Utility
(7.1.2) Permits
(7.1.3) Standards for Water and Sewer Utilities

7.2 Water and Sewer Main Construction

(7.2.1) Parallel Installation
(7.2.2) Crossings
(7.2.3) General

7.3 Water and Sewer Main Testing

(7.3.1) Testing and Disinfection Protocol for Mains

7.4 Special Conditions for Tapping Active Utilities

(7.4.1) Prohibit the Tapping of Mains

7.5 Water and Sewer Service Construction

(7.5.1) Existing and Active Public Mains
(7.5.2) Reference to Manuals
(7.5.3) New Public Water Main
(7.5.4) Depth and Backfill
(7.5.5) Angle Valve Location
(7.5.6) New Public Sewer Main
(7.5.7) Sewer Service Laterals
(7.5.8) Water and Sewer Laterals in the Same Ditch

WATER MAIN MATERIALS FOR BURIED SYSTEMS

7.6 **General Requirements**

7.7 **Product Review Committee**

7.8 **Public Utilities Product Manual**

WATER AND SANITARY SEWER SPECIAL CONDITIONS

7.9 **Water System Special Conditions**

(7.9.1) Installation Procedures

(7.9.2) Pipe Bedding and Backfill

(7.9.3) Special Design Vaults

7.10 **Sanitary Sewer System Special Conditions**

(7.10.1) Frame and Cover Quality Control
(7.10.2) Mains – Pipe Materials are Dependent on Installation Applications
(7.10.3) Laterals - Pipe Materials are Dependent on Installation Applications

PART TWO **DETAILS**

Detail Title	Drawing No.
Pipe Trench Detail	**1**
Street Cut and Repair Requirements	**1A**
Typical Gate Valve and Valve Box Installation	**2**
Deep Valve Box Installation	**2A**
Typical Large Gate Valve and Valve Box Installation	**2B**
Valve Stem Extension	**3**

Combination Air/Vacuum Valve Above The Main	**4**
Combination Air/Vacuum Valve Offset From The Main	**5**
Combination Air/Vacuum Valve and Piping Supports	**5A**
Fire Hydrant	**6**
Location Of Fire Hydrants	**7 & 8**
Fire Hydrant Layout	**9**
Thrust Blocks	**10**
Buttresses For 11 1/4º, 22 1/2º, And 45º Lower Vertical Bends	**11**
Anchorage For 11 1/4º, 22 1/2º, And 45º Upper Vertical Bends	**12**
Concrete Encasement Detail	**13**
Not Used	**14**
Concrete Slope Anchor	**15**
Dead End Anchor For Main Extension	**16**
Rodding	**17**
Utility And Pipe Crossings	**18**
Concrete Pier For Utility and Pipe Crossings	**19**
Water Main Tie-In To Existing Cast Iron	**20**
Water Main Tie-In To Exisitng Ductile Iron	**20A**
River Crossing	**21**
Test Meter Assembly	**22**

Standard Casing Installation	**23**
Liner Plate Tunnel	**24**
Typical Water Meter Setting In Public R-O-W	**25**
Water Meter Setting In A Dedicated Easement	**26**
Water Service And Meter Arrangements	**27**
5/8” X 3/4” And 1” Water Service Layouts	**28**
2” Water Service for 1 ½” and 2” Meters	**29**
Typical Dual Water Service Layout	**29A**
Compound And Fireline Meters Water Service Connection	**30**
Compound Meter Water Service Connection	**30A**
Commercial Water Lateral	**31**
Manual Air Release Valve	**32**
Manual Air Release Valve Offset	**33**
Water Main Blow-Off Connection	**34**
4’-0” I.D. Sanitary Sewer Manhole	**35**
5’-0” And 6’-0” I.D. Sanitary Sewer Manholes	**36**
Sanitary Sewer Manhole Doghouse Base	**37**
Manhole Frame And Lid	**38**
Manhole Step Detail	**39**
Sanitary Sewer Manhole Invert Shaping	**40**

Vent For Manholes **41**

Sanitary Sewer Manhole Abandonment **42**

Sanitary Sewer Pipe Abandonment At A Manhole **43**

Encased Outside Drop Connection **44**

Outside Drop Connection Alternate A **44A**

Outside Drop Connection Alternate B **45**

Emergency Sewer Force Main Pump Connection **46**

Chain Link Fence **47**

Sanitary Sewer Lateral Plan **48**

Sanitary Sewer Lateral (Profile) **49**

Lateral For Deep Sewer **50**

Heavy Duty Sanitary Lateral Clean-out **51**

Inside Drop Connection For Laterals **52**

Temporary Sanitary Lateral Disconnection **53**

Water Service Casing Detail **54**

Modified Casing for Large Utility Crossings **55**

Typical Watermain Abandonment Detail **56**

Standard Fence and Gate Detail **57**

CONTRACTOR'S GUIDELINE FOR INSTALLATION OF BURIED WATER AND SEWER UTILITIES

7.1 Contractor's Responsibilities

(7.1.1) The contractor shall call Miss Utility (1-800-552-7001) at least 48 hours, excluding Saturdays, Sundays, and legal state and national holidays, prior to the commencement of excavation or demolition or as required by Miss Utility. The City will comply with and will enforce this and all other requirements identified within the "Virginia Underground Utility Damage Prevention Act". Damages repaired by the City will be billed to the contractor at cost plus 20%.

(7.1.2) The contractor shall obtain all necessary permits to perform the work. The permits include, but are not limited to:

A. Road/Street Cutting permit from the City Department of Community Development – Inspection Division
B. Erosion/Sediment Control permit from the City Department of Community Development – Erosion Division
C. Blasting permit from the City Fire Department

With respect to blasting, the contractor shall notify the City Public Utilities Department, (540) 434-9959, at least 24 hours before conducting blasting in the vicinity of water and sewer utilities. (Virginia State Fire Prevention code – 1990 Edition – Section F2607.4)

(7.1.3) The contractor shall conform to "approved drawings and specifications", however, the following requirements apply:

(7.1.3.1) The contractor must conform to the "City of Harrisonburg, VA Design and Construction Standards Manual". The referenced standards shall supersede conflicts, ambiguities or interpretations arising from general approval of drawing or specifications except by specific variance approved in writing by the Director and denoted as such on the drawings, specifications, addendum or change order.

(7.1.3.2) The contractor shall not make an interpretation that the said contractor will be permitted to directly interrupt active water or sewer service at will.

(7.1.3.3) The contractor shall not make an interpretation that construction can be performed in such a manner than will require existing City customers to be without water or sewer service for an unspecified period of time.

(7.1.3.4) The contractor shall be responsible to recognize possible significant scheduling delays with items (7.1.3.2) and (7.1.3.3) above; the Director of Water and Sewer shall approve all interruption of service on a case by case review with intent to provide all residential customers a minimum 48 hours notice and all commercial/professional customers a minimum 72 hours notice. A construction schedule to coincide with non-working hours will be required where industrial customers are affected.

(7.1.3.5) The contractor shall not place a new utility extension into active service. Existing valves shall be operated by authorized City personnel only. The contractor shall not tap or otherwise alter any existing City main.

(7.1.3.6) The contractor is totally responsible for new utilities until formally conveyed to the City. After acceptance of ownership by the City, any damage caused by the contractor shall be considered a violation of the "Virginia Underground Utility Damage Prevention Act".

7.2 Water and Sewer Main Construction

(7.2.1) Parallel Installation

(7.2.1.1) Within public right-of-way; utility construction shall prevent the encroachment of underground utilities (electric, telephone, television cables, gas storm water, etc.) within five feet of water or sewer pipe. Furthermore, this distance shall be extended to accommodate 1:1 embankment slopes if water or sewer pipe has greater than five feet depth of cover.

(7.2.1.2) Within public right-of-way; water and sewer mains shall be constructed near the centerline of the traffic lane to allow future maintenance with closure of one lane only. The pipe shall not encroach within five feet of the gutter. Installation in areas shared by other utilities is specifically prohibited.

(7.2.1.3) In water or sewer easements, other underground utilities shall not be permitted except by written formal agreement approved by the Director of Water and Sewer. Water and sewer mains shall not encroach within five feet of easement limits.

(7.2.1.4) All cases; water and sewer:

(7.2.1.4.1) Normal conditions – water lines shall be laid at least ten feet horizontally from a sewer or sewer manhole whenever possible, the distance shall be measured edge-to-edge.

(7.2.1.4.2) Unusual conditions – when local conditions prevent a horizontal separation of ten feet, the water line may be laid closer to a sewer or sewer manhole provided that:

A. The bottom (invert) of the water main shall be at least eighteen inches above the top (crown) of the sewer:

B. Where the vertical separation cannot be obtained, the sewer shall be constructed of AWWA approved water pipe, pressure tested to 30 psi in place without leakage prior to backfilling; and

C. The sewer manhole shall be of watertight construction and tested in place.

(7.2.2) Crossings

(7.2.2.1) Underground utilities (electric, telephone, television cables, gas, storm, etc.) shall provide an absolute minimum eight inches clearance with water or sewer pipe barrels and eighteen inches clearance within two feet of the joint. Utility pipes fifteen inches and larger shall be specially supported pursuant to City Standards if clearance is less than eighteen inches. Exceptions may be granted at the discretion of the Director.

(7.2.2.2) All cases; water and sewer:

(7.2.2.2.1) Normal conditions – water lines crossing sewers shall be laid to provide a separation of at least eighteen inches between the bottom of the water line and the top of the sewer whenever possible.

(7.2.2.2.2) Unusual conditions – when local conditions prevent a vertical separation described above, the following construction shall be used:

A. Sewers passing over or under water lines shall be constructed of the materials required for water main construction and be pressure tested to 30 psi in place without leakage prior to backfilling.

B. Water lines passing under sewers shall, in addition, be protected by providing:

1. A vertical separation of at least eighteen inches between the bottom of the sewer and the top of the water line;

2. Adequate structural support for the sewers to prevent excessive deflection of the joints and the settling on and breaking of the water line; and

3. That the length of the water and sewer lines be centered at the point of the crossing so that joints shall be equidistant and separated as far as possible.

(7.2.2.3) No water pipes shall pass through or come in contact with any part of a sewer manhole.

(7.2.3) General

(7.2.3.1) Minimum cover for new water pipe installation shall be three (3) feet.

(7.2.3.2) Existing water pipe shall be lowered or raised when proposed grading shall alter cover over the pipe to less than two and one-half (2 ½) feet or to greater than eight (8) feet.

(7.2.3.3) Maximum cover for water pipe shall be eight (8) feet.

7.3 Water and Sewer Main Testing

(7.3.1) The City of Harrisonburg has established a protocol for testing and disinfection of mains, which shall be the responsibility of the Contractor to ascertain "on-site" approval by the Office of Community Development Inspection personnel. The protocol includes:

(7.3.1.1) Hydrostatic testing of all water mains

(7.3.1.2) Disinfection and Bacteriological sampling of all water mains

(7.3.1.3) Final Inspection Operations test for all watermain valves and hydrants

(7.3.1.4) Low Pressure Air Test of sanitary sewer pipe

(7.3.1.5) PVC Sewer requires pulling of 5% mandrel

(7.3.1.6) Exfiltration or Air Vacuum testing of manholes
The applicable charts and specifications may be found following this section.

CHARTS AND SPECIFICATIONS FOR WATER AND SEWER MAIN TESTING

NO.	DATE	DESCRIPTION	INIT.
1.	7/01/04	2004 D&CSM UPDATE	SDC

WATER AND SEWER MAIN TESTING

DWG. NO

PAGE T-1

ALLOWABLE LEAKAGE PER 1000 FEET OF PIPELINE IN GALLONS PER HOUR

AVG. TEST PRESSURE PSI	NOMINAL PIPE DIAMETER - IN															
	3	4	6	8	10	12	14	16	18	20	24	30	36	42	48	54
450	0.48	0.64	0.95	1.27	1.59	1.91	2.23	2.55	2.87	3.18	3.82	4.78	5.73	6.69	7.64	8.60
400	0.45	0.60	0.90	1.20	1.50	1.80	2.10	2.40	2.70	3.00	3.60	4.50	5.41	6.31	7.21	8.11
350	0.42	0.56	0.84	1.12	1.40	1.69	1.97	2.25	2.53	2.81	3.37	4.21	5.06	5.90	6.74	7.58
300	0.39	0.52	0.78	1.04	1.30	1.56	1.82	2.00	2.34	2.60	3.12	3.90	4.68	5.46	6.24	7.00
275	0.37	0.50	0.75	1.00	1.24	1.49	1.74	1.99	2.24	2.49	2.99	3.73	4.48	5.23	5.98	6.72
250	0.36	0.47	0.71	0.95	1.19	1.42	1.66	1.90	2.14	2.37	2.85	3.56	4.27	4.99	5.70	6.41
225	0.34	0.45	0.68	0.90	1.13	1.35	1.58	1.80	2.03	2.25	2.70	3.38	4.05	4.73	5.41	6.03
200	0.32	0.43	0.64	0.85	1.06	1.28	1.48	1.70	1.91	2.12	2.55	3.19	3.82	4.46	5.09	5.73
175	0.30	0.40	0.59	0.80	0.99	1.19	1.39	1.59	1.79	1.98	2.38	2.98	3.58	4.17	4.77	5.36
150	0.28	0.37	0.55	0.74	0.92	1.10	1.29	1.47	1.66	1.84	2.21	2.76	3.31	3.86	4.41	4.97
125	0.25	0.34	0.50	0.67	0.84	1.01	1.18	1.34	1.51	1.68	2.01	2.52	3.02	3.53	4.03	4.53
100	0.23	0.30	0.45	0.60	0.75	0.90	1.05	1.20	1.35	1.50	1.80	2.25	2.70	3.15	3.60	4.05

NOTES:

1. ALL NEW WATER MAINS SHALL BE TESTED IN ACCORDANCE WITH AWWA C600, AFTER BACKFILLING TO A HYDROSTATIC PRESSURE OF NOT LESS THAN 15 PSI ABOVE THE DESIGN WATER PRESSURE FOR THE SYSTEM OR 150 PSI, WHICHEVER IS GREATER. ALL HIGH POINTS IN THE PORTION OF THE SYSTEM UNDER TEST SHALL BE VENTED AND ALL AIR SHALL BE EXPELLED FROM THE SYSTEM PRIOR TO BEGINNING THE TEST. THIS IS ACCOMPLISHED THROUGH THE USE OF AIR RELEASE VALVES PLACED AT HIGH POINTS ALONG THE WATER MAIN. WHERE CONCRETE THRUST BLOCKS ARE USED, THEY SHALL HAVE ATTAINED THEIR FINAL SET STRENGTH PRIOR TO TESTING.
2. AFTER THE PORTION OF OF THE SYSTEM BEING TESTED HAS REACHED THE REQUIRED PRESSURE, THE PRESSURE SHALL BE MAINTAINED FOR TWO HOURS. AT THE CONCLUSION OF THE PRESSURE TEST, VOLUME OF MAKEUP WATER REQUIRED TO REFILL THE PIPELINE SHALL BE DETERMINED BY MEASUREMENT WITH A DISPLACEMENT METER OR BY PUMPING FROM A VESSEL OF KNOWN VOLUME. ANY JOINTS OR FITTINGS AT WHICH LEAKAGE OCCURS SHALL BE REPAIRED TO ENSURE TIGHTNESS.
3. LEAKAGE SHALL NOT EXCEED THE VALUES FOR THE APPROPRIATE SIZE PIPELINE USING THE TABLE PROVIDED. THIS TABLE IS BASED ON THE EQUATION:

$$L = (ND\sqrt{P})/8900$$

WHERE L=ALLOWABLE LEAKAGE IN GALLONS PER HOUR, N=NO. OF JOINTS IN THE LENGTH OF PIPELINE TESTED, D=NOMINAL DIAMETER OF THE PIPE IN INCHES, AND P=AVERAGE TEST PRESSURE DURING THE LEAKAGE TEST IN PSI GAUGE. IF THE PIPELINE UNDER TEST CONTAINS SECTIONS OF VARIOUS DIAMETERS. THE ALLOWABLE LEAKAGE WILL BE THE SUM OF THE COMPUTED LEAKAGE FOR EACH PIPE.

4. LEAK SHALL BE REPAIRED AND RETESTED UNTIL THE LEAKAGE IS WITHIN THE LIMIT SET. METHODS OF REPAIR PRIOR TO RETESTING WILL BE DONE WITH THE DIRECTOR'S APPROVAL AND INSPECTION.

(TO OBTAIN LEAKAGE RATES IN LITERS PER HOUR, MULTIPLY THE VALUES IN THE TABLE BY 3.785)

NO.	DATE	DESCRIPTION	INIT.
1.	7/01/04	2004 D&CSM UPDATE	SDC

WATER MAIN LEAKAGE TESTING

DWG. NO

PAGE T-2

ALLOWABLE LEAKAGE PER 1000 FEET OF PIPELINE IN GALLONS PER HOUR

AVG. TEST PRESSURE	NOMINAL PIPE DIAMETER IN INCHES				
(PSI)	4"	6"	8"	10"	12"
150	1.48	2.22	2.95	3.69	4.43
125	1.36	2.03	2.71	3.39	4.07
100	1.21	1.82	2.42	3.03	3.83

NOTES:

1. MINIMUM SIZE FORCE MAINS SHALL BE NOT LESS THAN FOUR INCHES IN DIAMETER EXCEPT BY VARIANCE APPROVAL OF THE DIRECTOR.
2. AT PUMPING CAPACITY A MINIMUM SELF-SCOURING VELOCITY OF TWO FEET PER SECOND SHALL BE MAINTAINED UNLESS FLUSHING FACILITIES ARE PROVIDED. A VELOCITY OF EIGHT FEET PER SECOND SHOULD NOT BE EXCEEDED.
3. AN AIR RELIEF VALVE SHALL BE PLACED AT THE NECESSARY HIGH POINTS IN THE FORCE MAIN TO RELIEVE AIR LOCKING.
4. THE FORCE MAIN SHOULD ENTER THE RECEIVING MANHOLE WITH ITS CENTERLINE HORIZONTAL AND WITH AN INVERT ELEVATION WHICH WILL PREFERABLY ENSURE A SMOOTH FLOW TRANSITION TO THE GRAVITY FLOW SECTION, BUT IN NO CASE SHALL THE FORCE MAIN ENTER THE GRAVITY SEWER SYSTEM AT A POINT MORE THAN ONE FOOT ABOVE THE FLOW LINE OF THE RECEIVING MANHOLE. THE FORCE MAIN SHALL BE DESIGNED WITH A CURVED SECTION OUSIDE OF THE RECEIVING MANHOLE TO PREVENT AIR FROM TRAVELING UP INTO THE FORCE MAIN. THE DESIGN SHALL ESPECIALLY PREVENT TURBULENCE AT THIS POINT. ATTENTION SHOULD BE GIVEN TO THE USE OF INERT MATERIALS OR PROTECTIVE COATINGS FOR THE RECEIVING MANHOLE TO PREVENT DETERIORATION AS A RESULT OF HYDROGEN SULFIDE OR OTHER CHEMICALS.
5. ALL PIPE USED FOR FORCE MAINS SHALL MEET WATERMAIN CRITERIA FOR THE CITY OF HARRISONBURG.
6. ALL FORCE MAINS SHALL BE TESTED AT A MINIMUM PRESSURE OF AT LEAST 50% ABOVE THE DESIGN OPERATING PRESSURE, FOR AT LEAST 30 MINUTES. LEAKAGE SHALL NOT EXCEED THE VALUES FOR THE APPROPRIATE SIZE PIPE USING THE TABLE PROVIDED. THE TABLE IS BASED ON THE EQUATION

$$L = (ND\sqrt{P})/1850$$

   WHERE L=ALLOWABLE LEAKAGE IN GALLONS PER HOUR, N=NO. OF PIPE JOINTS, D=PIPE DIAMETER IN INCHES, P=TEST PRESSURE IN PSI.
7. BEDDING, HAUNCHING, AND ALL BACKFILL SHALL CONFORM TO THE PIPE TRENCH DETAIL (DRWG. NO. 1) AS SPECIFIED FOR WATERMAIN INSTALLATION.
8. FORCE MAINS SHALL BE SUFFICIENTLY ANCHORED WITHIN THE PUMP STATION AND THROUGHOUT THE LINE LENGTH. THE NUMBER OF BENDS SHALL BE AS FEW AS POSSIBLE. THRUST BLOCKS, RESTRAINED JOINTS AND/OR TIE RODS SHALL BE PROVIDED WHERE RESTRAINT IS NEEDED.

NO.	DATE	DESCRIPTION	INIT.
1.	7/01/04	2004 D&CSM UPDATE	SDC
2.	4/28/06	VDEQ REVIEW COMMENTS	DHG

FORCE MAIN LEAKAGE TESTING

DWG. NO

PAGE T-3

MINIMUM HOLDING TIME IN MINUTES REQUIRED
FOR PRESSURE DROP FROM 3.5 TO 3.0 PSI

PIPE DIAMETERS

LENGTH OF PIPE IN FEET	4"	6"	8"	10"	12"	15"	18"	21"	24"	27"	30"	33"	36"
25	2.8	4.2	5.7	7.1	8.5	10.6	12.7	14.8	17.0	19.2	21.2	23.3	25.5
50												23.3	25.5
75										19.2	21.2	24.3	28.8
100								14.8	17.0	21.6	26.8	32.2	38.5
125							12.7	16.3	21.2	27.0	33.3	40.1	48.2
150						10.6	14.3	19.6	25.5	32.6	40.1	48.3	57.6
175						11.6	16.7	22.8	29.7	37.9	46.7	56.2	67.3
200					8.5	13.3	19.1	26.1	34.0	43.3	53.5	64.4	77.0
225				7.1	9.5	15.0	21.5	29.4	38.2	48.7	60.1	72.3	86.7
250				7.4	10.6	16.7	24.0	32.6	42.5	54.0	66.9	80.5	96.1
275				8.1	11.7	18.3	26.3	35.9	46.7	59.6	73.5	88.4	105.8
300			5.7	8.9	12.7	20.0	28.7	39.1	51.0	65.0	80.3	96.6	115.5
350			6.6	10.4	14.9	23.4	33.4	45.7	59.5	75.7	93.7	112.7	134.6
400		4.2	7.6	11.9	17.0	26.7	38.2	52.2	68.0	86.6	107.1	128.8	154.0
450		4.8	8.5	13.4	19.1	30.0	43.0	58.7	76.5	97.4	120.5	144.9	173.1
500	2.8	5.3	9.5	14.9	21.2	33.3	47.8	65.3	85.0	108.3	133.9	161.0	192.5

NOTES:

1. TEST PLUGS SHALL BE SUPPLIED AND INSTALLED BY THE CONTRACTOR WITHIN THE PIPE AT EACH MANHOLE OR AT SUITABLE LOCATIONS TO TEST A SECTION OF THE PIPE. EACH PLUG SHALL BE SECURELY BRACED.
2. THE CONTRACTOR SHALL ALLOW THE AIR TEMPERATURE TO STABILIZE FOR AT LEAST TWO MINUTES TO ENSURE ACCURATE GAUGE PRESSURE READING, THEREAFTER ADDING ONLY THE AMOUNT OF AIR REQUIRED TO MAINTAIN AN INITIAL FOUR PSI PRESSURE, ADJUSTED FOR GROUND WATER. (SEE NOTE 4)
3. IF THE INTERNAL AIR PRESSURE DECREASES, THE TIME REQUIRED FOR THE PRESSURE DROP FROM 3.5 TO 3.0 PSI GREATER THAN THE AVERAGE GROUND WATER BACK PRESSURE WILL BE OBSERVED AND RECORDED. THIS TIME INTERVAL SHALL BE COMPARED WITH THE ESTABLISHED STANDARDS IN ACCORDANCE WITH THE APPROVED TABLE OF TIME AND LENGTH FOR VARIOUS DIAMETERS OF SEWER SHOWN ABOVE. THE TABLE IS BASED ON RAMSEIER'S EQUATION T=0.085 DK/Q, WHERE Q=0.0010 CFM. FOR TESTING 4" LATERALS WITH THE SEWER MAIN, ADD 2.8 MINUTES TO THE APPROPRIATE SEWER MAIN TEST TIME.
4. THE GROUND WATER ADJUSTMENT SHALL BE MADE IN ACCORDANCE WITH THE EQUIVALENCY TABLE SHOWN BELOW. THE TABLE IS BASED ON 1.0 V.FT. OF WATER EQUAL TO 0.4335 PSI. THE APPROPRIATE PSI ALLOWANCE FOR AVERAGE VERTICAL FOOT OF GROUND WATER SHALL BE ADDED TO THE BASE STARTING PRESSURE OF 4.0 PSI, BUT IN NO CASE SHALL THE RESULTING PRESSURE BE MORE THAN 9.0 PSI. FOR EXAMPLE, THE HEIGHT OF GROUND WATER ABOVE THE PIPE INVERT IS 3 FEET; THE PSI REQUIRED TO MAINTAIN 4 PSI PRESSURE=5.30 PSI (4 PSI + 1.30 PSI=5.30 PSI). INTERPOLATION IS NEEDED FOR FRACTIONS OF A FOOT OF WATER.

EQUIVALENT PSI	HEIGHT OF GROUND WATER ABOVE PIPE INV. (FT)
0.43	1
0.87	2
1.30	3
1.73	4
2.17	5
2.60	6
3.03	7
3.47	8
3.90	9
4.34	10
4.77	11
4.98	11.5
FOR ANYTHING ABOVE 11.5 VF. ALLOW MAXIMUM 5.0 PSI.	

NO.	DATE	DESCRIPTION	INIT.
1.	7/01/04	2004 D&CSM UPDATE	SDC

SEWER MAIN
AIR TESTING

DWG. NO

PAGE
T-4

NOTES:

MANHOLES SHALL BE VACUUM TESTED IN ACCORDANCE WITH ASTM C 1244. GENERALLY:

1. MANHOLES SHALL BE TESTED AFTER ASSEMBLY AND PRIOR TO BACKFILLING.
2. STUB-OUTS, MANHOLE BOOTS AND PIPE PLUGS SHALL BE SECURED TO PREVENT MOVEMENT WHILE THE VACUUM IS DRAWN.
3. INSTALLATION AND OPERATION OF VACUUM EQUIPMENT AND INDICATING DEVICES SHALL BE IN ACCORDANCE WITH EQUIPMENT SPECIFICATIONS FOR WHICH PERFORMANCE INFORMATION HAS BEEN PROVIDED BY THE MANUFACTURER AND APPROVED BY THE DIRECTOR.
4. A MEASURED VACUUM OF 10" OF MERCURY SHALL BE ESTABLISHED IN THE MANHOLE. THE TIME FOR THE VACUUM TO DROP TO 9" OF MERCURY SHALL BE RECORDED.
5. ACCEPTANCE STANDARDS FOR LEAKAGE SHALL BE ESTABLISHED FROM THE ELAPSED TIME FOR A NEGATIVE PRESSURE CHANGE FROM 10" TO 9" OF MERCURY. THE MAXIMUM ALLOWABLE LEAKAGE RATE FOR A FOUR FOOT DIAMETER MANHOLE SHALL BE IN ACCORDANCE WITH THE FOLLOWING:

MANHOLE DEPTH	MINIMUM ELAPSED TIME FOR PRESSURE CHANGE OF 1 INCH OF MERCURY
10 FT OR LESS	60 SECONDS
10 FT BUT LESS THAN 15 FT	75 SECONDS
15 FT BUT LESS THAN 25 FT	90 SECONDS

FOR MANHOLES FIVE FEET IN DIAMETER, ADD AN ADDITIONAL 15 SECONDS AND FOR MANHOLES SIX FEET IN DIAMETER, ADD AN ADDITIONAL 10 SECONDS TO THE TIME REQUIREMENTS FOR FOUR FOOT DIAMETER MANHOLES.

6. IF THE MANHOLE FAILS THE TESTS, NECESSARY REPAIRS SHALL BE MADE; THE VACUUM TEST AND REPAIRS SHALL BE REPEATED UNTIL THE MANHOLE PASSES THE TEST OR THE MANHOLE SHALL BE TESTED IN ACCORDANCE WITH THE STANDARD EXFILTRATION TEST AND RATED ACCORDINGLY.
7. IF A MANHOLE JOINT MASTIC IS COMPLETELY PULLED OUT DURING THE VACUUM TEST, THE MANHOLE SHALL BE DISASSEMBLED AND THE MASTIC REPLACED.

NO.	DATE	DESCRIPTION	INIT.
1.	7/01/04	2004 D&CSM UPDATE	SDC
2.	5/11/06	VDEQ REVIEW COMMENTS	DHG

AIR VACUUM TESTING OF SEWER MANHOLES

DWG. NO

PAGE T-5

NOTES:

1. INFLATABLE STOPPERS SHALL BE USED TO PLUG ALL LINES INTO AND OUT OF THE MANHOLE BEING TESTED.

2. THE STOPPERS SHALL BE POSITIONED IN THE LINES FAR ENOUGH FROM THE MANHOLES TO ENSURE TESTING TO THOSE PORTIONS OF THE LINES NOT AIR TESTED.

3. THE MANHOLE SHALL THEN BE FILLED WITH WATER AND A MAXIMUM 12-HOUR SOAK SHALL BE ALLOWED.

4. LEAKAGE SHALL NOT EXCEED ONE-HALF GALLON PER HOUR PER FOUR FEET VERTICAL SECTION. MANHOLES DETERMINED TO BE SUSPECTED OF POOR QUALITY, JOINTING OR CONSTRUCTION PRACTICES BY THE DIRECTOR OR INSPECTOR SHALL BE TESTED TO THE TOP OF THE MANHOLE AND REPAIRED AS NECESSARY.

NO.	DATE	DESCRIPTION	INIT.
1.	7/01/04	2004 D&CSM UPDATE	SDC
2.	2/22/06	VDEQ REVIEW COMMENTS	DHG

EXFILTRATION TESTING OF SEWER MANHOLES

DWG. NO

PAGE T-6

VR 355-18-012.11 SECTION 3.58 DISINFECTION OF WATER MAINS

A. ALL WATER MAINS SHALL BE DISINFECTED PRIOR TO BEING PLACED IN OPERATION.

B. PRIOR TO DISINFECTION, ALL WATER MAINS SHALL BE FLUSHED UNLESS THE TABLET METHOD OF DISINFECTION IS USED. ALL VALVES AND HYDRANTS SHALL BE OPERATED DURING THIS OPERATION. FLUSHING VELOCITIES SHOULD NOT BE LESS THAN 2.5 FT/SEC.

C. METHODS OF CHLORINE APPLICATION:

1. CONTINUOS FEED METHOD - POTABLE WATER SHALL BE INTRODUCED INTO THE PIPE MAIN AT A CONSTANT FLOW RATE. CHLORINE SHALL BE ADDED AT A CONSTANT RATE TO THIS FLOW SO THAT THE CHLORINE CONCENTRATION IN THE WATER IN THE PIPE IS AT LEAST 50 MG/L. THE CHLORINATED WATER SHALL REMAIN IN THE MAIN AT LEAST 24 HOURS, AFTER WHICH THE CHLORINE CONCENTRATION IN THE WATER SHALL BE AT LEAST 10 MG/L. ALL VALVES AND APPURTENANCES SHALL BE OPERATED WHILE THE CHLORINATED WATER REMAINS IN THE WATER MAIN.
2. SLUG METHOD - POTABLE WATER SHALL BE INTRODUCED INTO THE MAIN AT A CONSTANT FLOW RATE. THE WATER SHALL RECEIVE A CHLORINE DOSAGE WHICH WILL RESULT IN A CHLORINE CONCENTRATION OF 100 MG/L IN A "SLUG" OF THE WATER. THE CHLORINE SHALL BE ADDED LONG ENOUGH TO INSURE THAT ALL PORTIONS OF THE MAIN ARE EXPOSED TO THE 100 MG/L CHLORINE SOLUTION FOR AT LEAST 3 HOURS. THE CHLORINE RESIDUAL SHALL BE CHECKED AT REGULAR INTERVALS NOT TO EXCEED 2000 FEET TO INSURE THAT ADEQUATE RESIDUAL IS MAINTAINED. AS THE CHLORINATED WATER PASSES VALVES AND APPURTENANCES, THEY SHALL BE OPERATED TO INSURE DISINFECTION OF THESE APPURTENANCES.
3. TABLET METHOD - THIS METHOD SHALL NOT BE USED IF NONPOTABLE WATER OR FOREIGN MATERIALS HAVE ENTERED THE MAINS OR IF THE WATER TEMPERATURE IS BELOW 5°C (41°F). THE TABLETS SHALL BE PLACED IN EACH SECTION AND IN ALL APPURTENANCES. ENOUGH TABLETS SHALL BE USED TO INSURE THAT A CHLORINE CONCENTRATION OF 25 MG/L IS PROVIDED IN THE WATER. THEY SHALL BE ATTACHED BY AN ADHESIVE TO THE TOP OF THE PIPE SECTIONS AND CRUSHED OR RUBBED IN ALL APPURTENANCES. THE ADHESIVE SHALL BE ACCEPTABLE TO THE DIVISION. THE VELOCITY OF THE POTABLE WATER IN THE MAIN SHALL BE LESS THAN 1 FT/SEC. THE WATER SHALL THEN REMAIN IN CONTACT WITH THE PIPE FOR 24 HOURS. ALL VALVES AND APPURTENANCES SHALL BE OPERATED WHILE THE CHLORINATED WATER IS IN THE WATER MAIN.

D. FINAL FLUSHING - AFTER THE REQUIRED RETENTION PERIOD, THE CHLORINATED WATER SHALL BE FLUSHED FROM THE MAIN USING POTABLE WATER.

E. TESTING - AFTER THE MAINS HAVE BEEN FLUSHED, THE WATER MAINS SHALL BE TESTED AS OUTLINED BELOW:

1. AFTER FINAL FLUSHING AND BEFORE THE WATER MAIN IS PLACED IN SERVICE, SAMPLES SHALL BE COLLECTED AND TESTED FOR BACTERIOLOGIC QUALITY AND SHALL SHOW THE ABSENCE OF COLIFORM ORGANISMS. AT LEAST TWO SAMPLES SHALL BE COLLECTED AT LEAST 24 HOURS APART AT INTERVALS NOT EXCEEDING 1200 FEET, AND TESTED BY A STATE HEALTH DEPARTMENT APPROVED LABORATORY.
2. SAMPLES FOR BACTERIOLOGICAL ANALYSIS SHALL BE COLLECTED IN STERILE BOTTLES TREATED WITH SODIUM THIOSULFATE. IF THE LABORATORY RESULTS INDICATE THE PRESENCE OF COLIFORM BACTERIA, THE SAMPLES ARE UNSATISFACTORY AND DISINFECTION SHALL BE REPEATED UNTIL THE SAMPLES ARE SATISFACTORY.
3. A SAMPLING TAP CONSISTS OF A CORPORATION COCK WITH METAL PIPE. THE CORPORATION STOP INLET SHALL BE MALE, 1 INCH IN SIZE, PURSUANT TO CHAPTER 7, SECTION 7.5. (UPON COLLECTION OF SAMPLING THE CONTRACTOR SHALL CONSTRUCT A PARTIAL WATER SERVICE, CHAPTER 7, DWG. 26, P. 46, OR MANUAL AIR RELEASE, DWG. 32, P. 52, COMPLETE AND READY FOR USE.)

F. SAMPLES SHALL BE COLLECTED BY CITY PERSONNEL UPON PRIOR SCHEDULING BY THE CONTRACTOR WITH THE APPROPRIATE CITY DEPARTMENT PERSONNEL.
REPAIRS - CLEANING, DISINFECTING, FLUSHING, TESTING, OR SIMILAR OPERATIONAL ACTIONS SHALL BE IN ACCORDANCE WITH THE MOST CURRENT STANDARD ISSUED BY AWWA. (AWWA C-651)

NO.	DATE	DESCRIPTION	INIT.
1.	7/01/04	2004 D&CSM UPDATE	SDC

DISINFECTION OF WATER MAINS

DWG. NO

PAGE T-7

7.4 Special Conditions for Tapping Active Utilities

(7.4.1) The City of Harrisonburg specifically prohibits the tapping of water mains, sewer mains and manholes except by contract arrangement with the Department of Water and Sewer. Other arrangements must be approved and permitted on a case-by-case review.

7.5 Water and Sewer Service Construction

(7.5.1) Where a water or sewer service connection is to be installed from an existing and active public main, the City will install the service in its entirety to the meter or cleanout, respectively, upon payment of applicable fees. Contractors are not to tap any active main or manhole. Exceptions shall occur only when the City has directly employed the contractor and the scope of work so indicates, or the work is specified on an approved developer site plan.

(7.5.2) The City of Harrisonburg Design and Construction Standards Manual and the Public Utilities Product Manual provide specifications for materials, permitted sizes, permitted arrangements and construction/testing procedures.

(7.5.3) Where a contractor is installing a new public water main, the contractor shall install the partial service lines (corporation stop, copper tubing, angle valve and meter box) simultaneously such to allow hydrostatic testing of both the main and service. The contractor shall provide the items listed, however, the City will provide the meter box upon payment of acceptable fees, the City will complete the meter and yoke installations.

(7.5.4) Water service lines shall be installed at 30” minimum depth and backfilled with select local material which is free of debris, roots, frozen materials, organic matter, stones larger than 2” in diameter; Unified Soil Classification; ML/CL/MH/CH. Stone aggregate materials or blasted rock fragments are not permitted.

(7.5.5) Angle valves terminating a water service shall be installed at 18” depth from final grade. Horizontal location shall be as applicable:

A. 24” back of curb in grassed area

B. Equal distance between back of curb and front edge of sidewalk if in frontal utility strip

C. 36” back of curb/sidewalk interface if placed within sidewalk

D. Where no curb or sidewalk is proposed the horizontal location will be established on a case-by-case approval.

Meter boxes shall not be issued until proper field survey information has been provided for horizontal location and final grade.

(7.5.6) Where a contractor is installing a new public sewer main, the contractor shall install the service lateral in its entirety to the right-of-way or easement limits. Tee-wye fittings shall be used at the main and cleanouts shall be installed near the property line. Where the lateral is installed at a manhole, no cleanout is necessary.

(7.5.7) Sewer service laterals shall be installed at a minimum 2% grade for 4" pipe, and a minimum 1% grade for 6" pipe. In traffic areas, 36" minimum cover is required and pipe bedding, haunching and backfill in accordance with the pipe manufacturer's recommendations for structural support. This section is applicable within the right-of-way and easement where the public main is located, and where the building code regulation is not applicable.

(7.5.8) Water and sewer laterals may be installed in the same ditch pursuant to applicable ICC code which requires the water pipe to be placed above the sewer with a minimum 12" vertical separation from top of pipe to bottom of pipe. Under this circumstance, the allowable depth of cover over the sewer lateral shall be a minimum of 43".

MATERIALS FOR BURIED WATER AND SANITARY SEWER SYSTEMS

7.6 GENERAL REQUIREMENTS

All materials shall conform to the latest editions of AWWA, ANSI, NSF, ASTM and other standards as determined applicable by the City of Harrisonburg and the Virginia Department of Health. In the event of conflict between any of these standards the most stringent shall govern. Products and materials, which do not conform to these standards, will not be considered for approval.

7.7 PRODUCT REVIEW COMMITTEE

The City of Harrisonburg Public Utilities Department has established a Product Review Committee. The function of the committee is to review products and materials for conformance with established criteria for water and sanitary sewer systems. Specific duties of the committee are further defined within the Public Utilities Product Manual.

7.8 PUBLIC UTILITIES PRODUCT MANUAL

The Public Utilities Product Manual defines the process by which products will be accepted for use in the City's water and sanitary sewer systems. The Product Manual identifies specific references to the general requirements listed above, identifies specific criteria established by the City, provides a product status list and identifies the procedures for obtaining manual updates. Copies of the product manual are available through the Public Utilities Department.

WATER AND SANITARY SEWER SPECIAL CONDITIONS

7.9 WATER SYSTEM SPECIAL CONDITIONS

(7.9.1) Installation procedures as recommended by the manufacturer shall be applied as the accepted method. The City reserves the right to enforce AWWA recommended procedures by choice.

(7.9.2) Pipe bedding, haunching and initial backfill

(7.9.2.1) Mains and Services: Select local material shall be free of debris, roots, frozen materials, organic matter, stones larger than 2" in diameter; Unified Soil Classification: ML/CL/MH/CH.

(7.9.2.2) Mains ONLY: VDOT Aggregate material #68 may be used for limited applications, such as pipe crossings, where compaction cannot be obtained with earth material. Other applications require approval of the Director.

(7.9.3) Special Design Vaults – Shop drawings shall be submitted by the Contractor for review and approval of the Director prior to fabrication of any special design vault.

7.10 SANITARY SEWER SYSTEM SPECIAL CONDITIONS

(7.10.1) Frame and Cover Quality Control.

(7.10.1.1) Weights – Casting weights shall not vary from the published City standard by more than +/- 5 percent without prior approval of the Director

(7.10.1.2) Tolerances – Casting tolerances shall be plus or minus 1/16 inch, and an additional plus or minus 1/16 inch per foot of dimension. Not withstanding these tolerances, all frames and covers of the same nominal

size shall be interchangeable and also compatible with paving extension rings manufactured to the specified tolerances.

(7.10.1.3) Machining - All castings to be manufactured true to pattern and component parts shall fit together in a satisfactory manner, as determined by the City's inspection test. All manhole frames and covers shall have continuously machined bearing surfaces to prevent rocking and rattling. The top of the manhole frame shall also be considered a bearing surface with respect to paving extension ring compatibility.

(7.10.1.4) Shop Drawings – Manufacturer's shop drawings may be required by the Director for approval prior to manufacture or shipping of castings to job site.

(7.10.1.5) Job Site Testing and Inspection of Castings for Compatibility with City Standard – The Contractor's scope of work shall include coordination of supplier quality control. Upon arrival of the castings at the job site, the Contractor shall examine each for compliance with these specifications prior to acceptance of castings from supplier or prior to actual installation. In addition, the Contractor shall perform a compatibility test of each casting in the presence of the City inspector with an approved paving extension ring. The Contractor shall insert the paving ring into each frame, simultaneously insert the associated manhole cover into the paving ring, and examine this combination with respect to tolerance and machining specifications. Castings which do not comply with these specifications shall not be accepted by the Contractor for installation on the project. The Director shall retain the right to reject castings not conforming to this specification and/or approved submittal drawings.

(7.10.2) Mains – Pipe materials are dependent on installation applications. See Chapter 4 for specific applications.

(7.10.3) Laterals - Pipe materials are dependent on installation applications. See Chapter 4 for specific applications.

THIS PAGE LEFT INTENTIONALLY BLANK

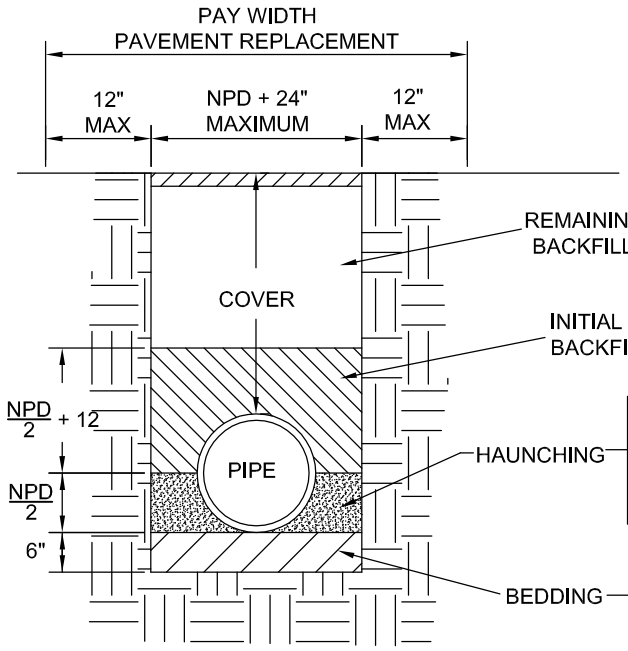

NPD = NOMINAL PIPE DIAMETER

PAYMENT REPLACEMENT PAY AREA AT MANHOLES = 8 FT DIAMETER CIRCLE

REMAINING BACKFILL — TOPSOIL IS NOT ALLOWED UNDER PAVEMENT, SIDEWALK, ROAD, OR BUILDING; NO STONE LARGER THAN 5" IN ANY DIMENSION; COMPACTED IN 24" MAXIMUM LIFTS

INITIAL BACKFILL — NO STONE LARGER THAN 1" IN ANY DIMENSION; COMPACTED IN 6" LIFTS

HAUNCHING — PLACE AND COMPACT UNDER PIPE TO PROVIDE SIDE SUPPORT. AVOID DISPLACEMENT OF PIPE FROM PROPER ALIGNMENT.

BEDDING — INSTALL & SHAPE TO PROVIDE CONTINUOUS PIPE SUPPORT AT HORIZONTAL & VERTICAL ALIGNMENT SHOWN ON PLANS; WHERE ROCK IS ENCOUNTERED IN THE TRENCH BOTTOM IT SHALL BE EXCAVATED TO A MINIMUM OF 6" BELOW THE PIPE.

LAYING CONDITION	BEDDING	HAUNCHING	INITIAL BACKFILL	REMAINING BACKFILL
1	CONCRETE ENCASEMENT (SEE CITY STANDARD DETAIL)			
2	CRA #68	CRA #68	CRA #68	#21A AGGREGATE
3	CRA #68	CRA #68	CRA #68	LM (85% NO LOAD - 95% LIVE LOAD)
4	CRA #68	CRA #68	SLM (95%)	LM (85% NO LOAD - 95% LIVE LOAD)
5	SH (95%)	(REFER TO LAYING CONDITION 6 OR 7)		
6	SLM (95%)	SLM (95%)	SLM (95%)	LM (85% NO LOAD - 95% LIVE LOAD)
7	SLM (95%)	SLM (95%)	SLM (95%)	#21A AGGREGATE

PIPE TRENCH APPLICATIONS:

DUCTILE IRON WATER PIPE	LAYING CONDITION 6
DUCTILE IRON WATER PIPE IN EXISTING PAVEMENT	LAYING CONDITION 7
DUCTILE IRON WATER PIPE WITH ROCK UNDERCUT	LAYING CONDITION 5
DUCTILE IRON SEWER PIPE	LAYING CONDITION 4
DUCTILE IRON SEWER PIPE IN EXISTING PAVEMENT	LAYING CONDITION 2
PVC SEWER PIPE	LAYING CONDITION 3
PVC SEWER PIPE IN EXISTING PAVEMENT	LAYING CONDITION 2

NOTES:

A) COMPACTION SHOWN IN PARENTHESES SHALL BE DETERMINED BY ASTM D 698

B) MINIMUM SPECIFICATION: TRENCHES UNDER PAVEMENTS, SIDEWALKS, ROADS, & BUILDINGS SHALL BE COMPACTED TO 95% DENSITY AS DETERMINED BY ASTM D 698, 6 INCH MAXIMUM LIFTS.

C) IF NOT SPECIFIED OTHERWISE, MINIMUM COMPACTION SHALL BE BY ROLLING WITH EARTH-MOVING EQUIPMENT.

D) CRA SHALL BE VIBRATED USING A PLATE VIBRATOR OR SIMILAR EQUIPMENT TO REDUCE VOIDS AND LIMIT SETTLEMENT.

DESIGNATION	DESCRIPTION OF BACKFILL MATERIALS
CRA	COARSE AGGREGATE: VDOT SIZE AS SHOWN IN PARENTHESES
SLM	SELECT LOCAL MATERIAL: FREE OF DEBRIS, ROOTS, FROZEN MATERIALS, ORGANIC MATTER, STONES GREATER THAN 1" DIAMETER. UNIFIED SOILS CLASSIFICATION: ML/CL/MH/CH
LM	LOCAL MATERIALS: FREE OF STONES GREATER THAN 5" DIAMETER AND FOREIGN MATERIALS.
SH	WHERE USED AS BEDDING FOR ROCK UNDERCUT, USE MATERIAL WITH SOME PLASTIC TENDENCIES SUCH TO SEAL ROCK FISSURES, SUCH AS SHALE-CLAY MIX.

NOT TO SCALE

REVISIONS

NO.	DATE	DESCRIPTION	INIT.
1.	7/01/04	2004 D&CSM UPDATE	SDC
2.	2/22/06	VDEQ REVIEW COMMENTS	DHG

PIPE TRENCH DETAIL

DWG. NO. 1

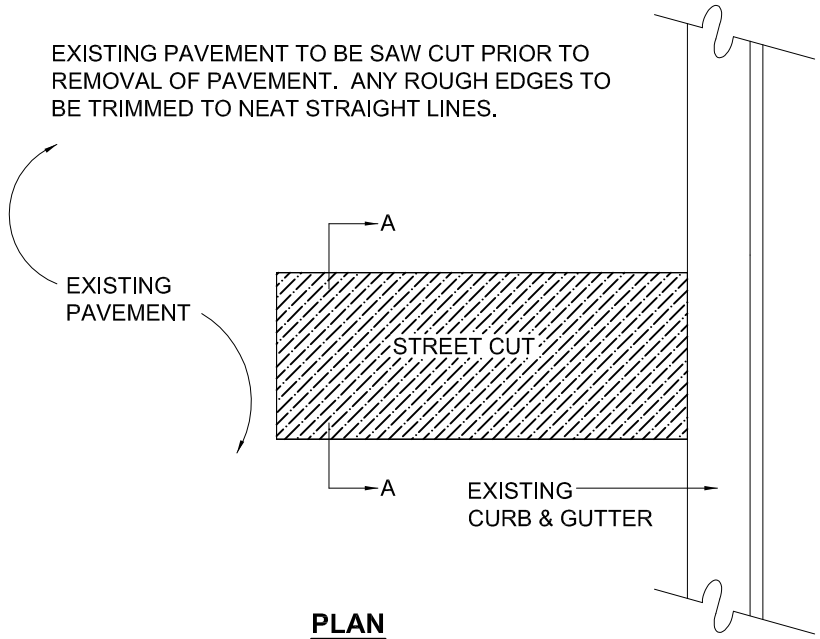

PLAN

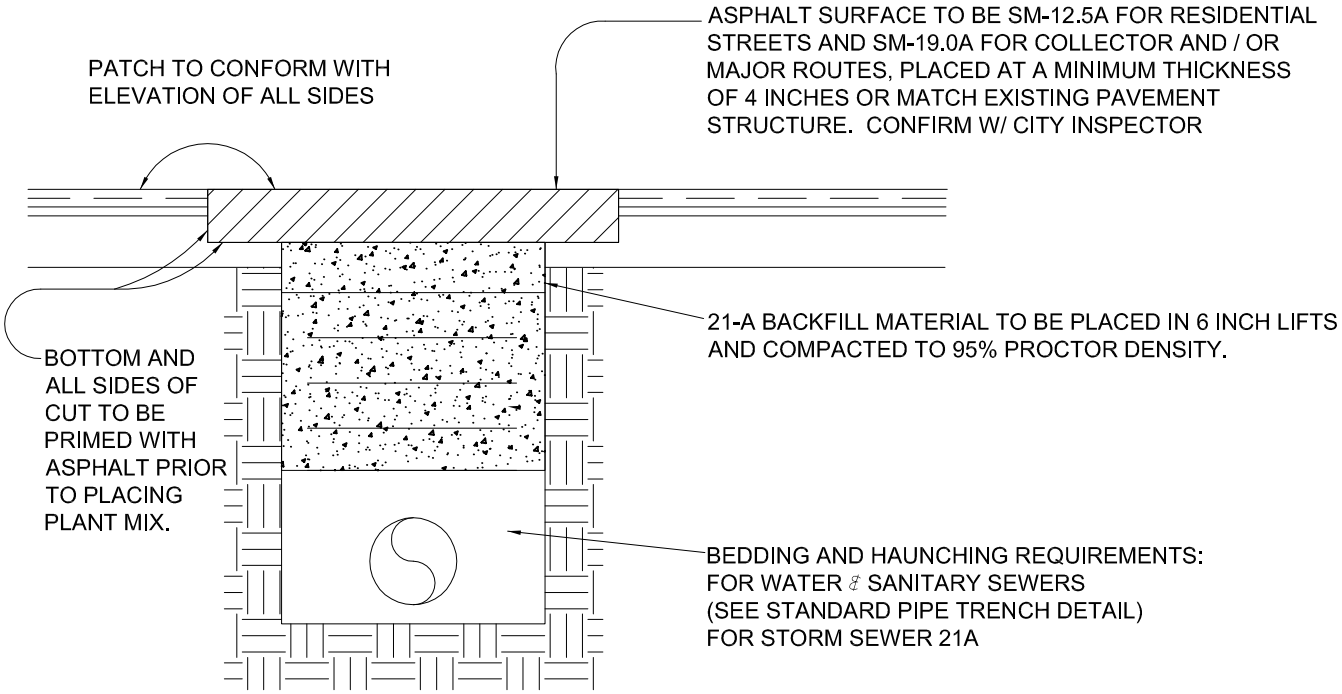

SECTION A - A

NOT TO SCALE

NO.	DATE	DESCRIPTION	INIT.
1.	9/21/04	2004 D&CSM UPDATE	SDC

STREET CUT AND REPAIR REQUIREMENTS

DWG. NO 1A

PAGE 15A

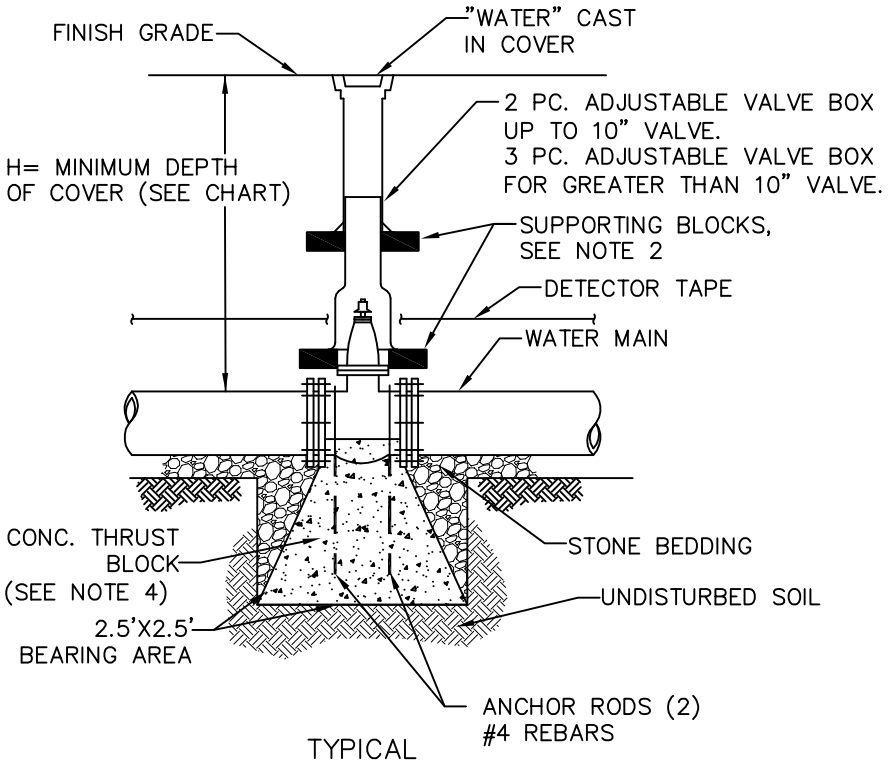

TYPICAL VALVE INSTALLATION

(NO SCALE)

DEPTH OF COVER	
PIPE SIZE	H
≤ 10"	36"
12" & 16"	48"
< 16"	CASE BY CASE

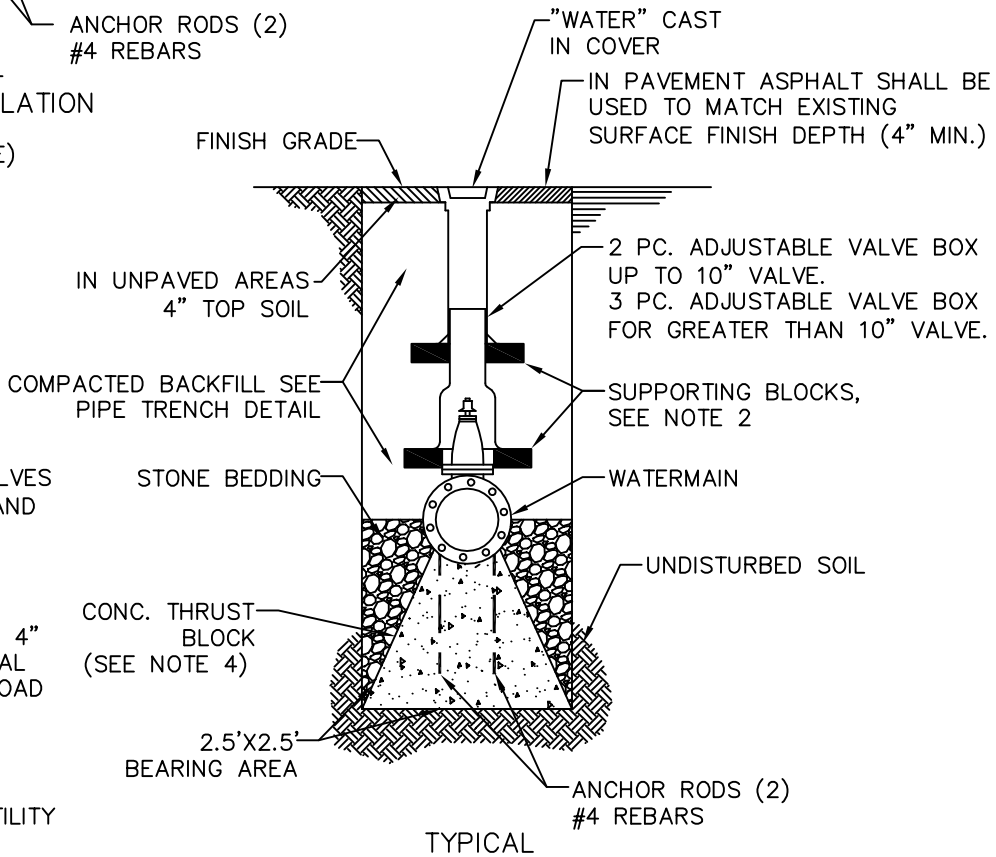

TYPICAL VALVE INSTALLATION

(NO SCALE)

NOTE:

1. CONFIGURATION SHOWN FOR VALVES UP TO 16". FOR VALVES 16" AND LARGER SEE DWG. NO. 2A.
2. 4 BRICKS SHALL BE PLACED BENEATH EACH PIECE OF THE VALVE BOX WITH A MINIMUM OF 4" 21-A STONE BEDDING FOR EQUAL AND LEVEL ADJUSTMENT AND LOAD TRANSFER.
3. FIELD CUTS NECESSARY ON SHALLOW VALVE INSTALLATIONS MUST BE APPROVED BY THE UTILITY INSPECTOR.
4. REQUIRED AT THE OPTION OF THE DIRECTOR.

NOT TO SCALE

NO.	DATE	DESCRIPTION	INIT.
1.	9/21/04	2004 D&CSM UPDATE	SDC

TYPICAL GATE VALVE AND VALVE BOX INSTALLATION

DWG. NO 2

PAGE 16

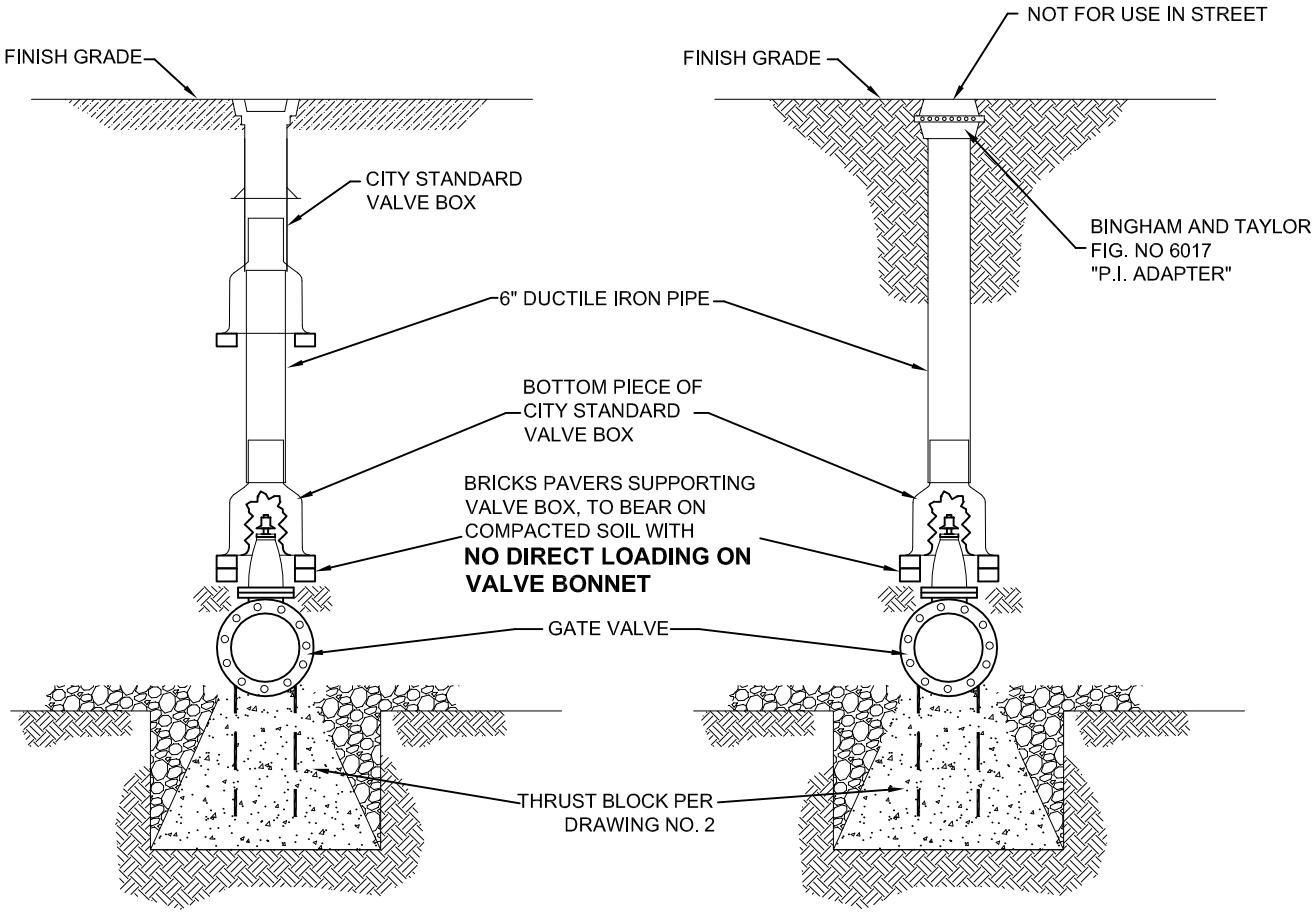

TYPE A

STANDARD FOR
ANY SURFACE

TYPE B

ALTERNATIVE FOR
NON-PAVED AREAS

NOTES:

1.) USE WHERE VALVE BOX DEPTH EXCEEDS 5' (3' TO 5' DEPTHS CAN BE OBTAINED BY USE OF STANDARD VALVE BOX WITH EXTRA BOTTOM PIECES STACKED OR BY ORDERING STANDARD VALVE BOX TO CORRECT SIZE).

2.) VALVE STEM EXTENSION REQUIRED IS NOT SHOWN (SEE STANDARD DETAIL FOR VALVE STEM EXTENSION).

NOT TO SCALE

REVISIONS

NO.	DATE	DESCRIPTION	INIT.
1.	5/28/04	2004 D&CSM UPDATE	ELR

DEEP VALVE BOX INSTALLATION

DWG. NO.
2A

PAGE
16A

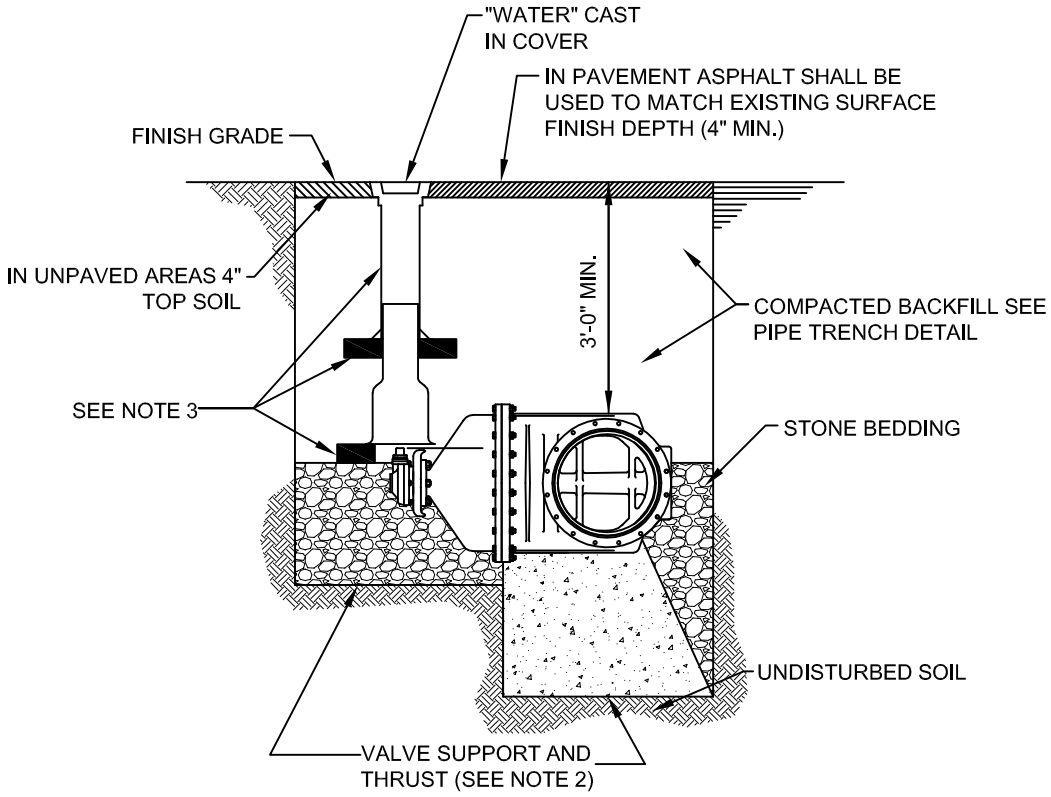

ELEVATION VIEW
(NO SCALE)

NOTE:

1. CONFIGURATION SHOWN FOR VALVES 16" AND LARGER. FOR VALVES UP TO 16" SEE DWG. NO. 2
2. VALVE SUPPORT & THRUST CONSIDERATIONS TO BE DESIGNED ON A CASE-BY-CASE BASIS AND SUBMITTED FOR REVIEW AND APPROVAL BY THE DIRECTOR. DESIGN SHALL PROVIDE SPECIAL SUPPORT, SUCH AS TREATED TIMBERS, CRUSHED STONE, CONCRETE PADS, AND/OR SUFFICIENTLY COMPACTED TRENCH BOTTOM TO INSURE THAT THE PIPE WILL NOT BE REQUIRED TO SUPPORT THE WEIGHT OF THE VALVE. SPECIAL CONSIDERATION SHALL BE GIVEN TO THRUST RESULTING FROM CLOSED VALVES.
3. CITY STANDARD VALVE BOX (SEE DRAWING NO. 2). ALTERNATE DESIGNS FOR MANHOLE ACCESS TO GEAR BOX MAY BE REQUIRED BY THE DIRECTOR ON A CASE-BY-CASE BASIS.

NOT TO SCALE

NO.	DATE	DESCRIPTION	INIT.
1.	7/01/04	2004 DCSM UPDATE	DHG

TYPICAL LARGE GATE VALVE AND VALVE BOX INSTALLATION

DWG. NO 2B

PAGE 16B

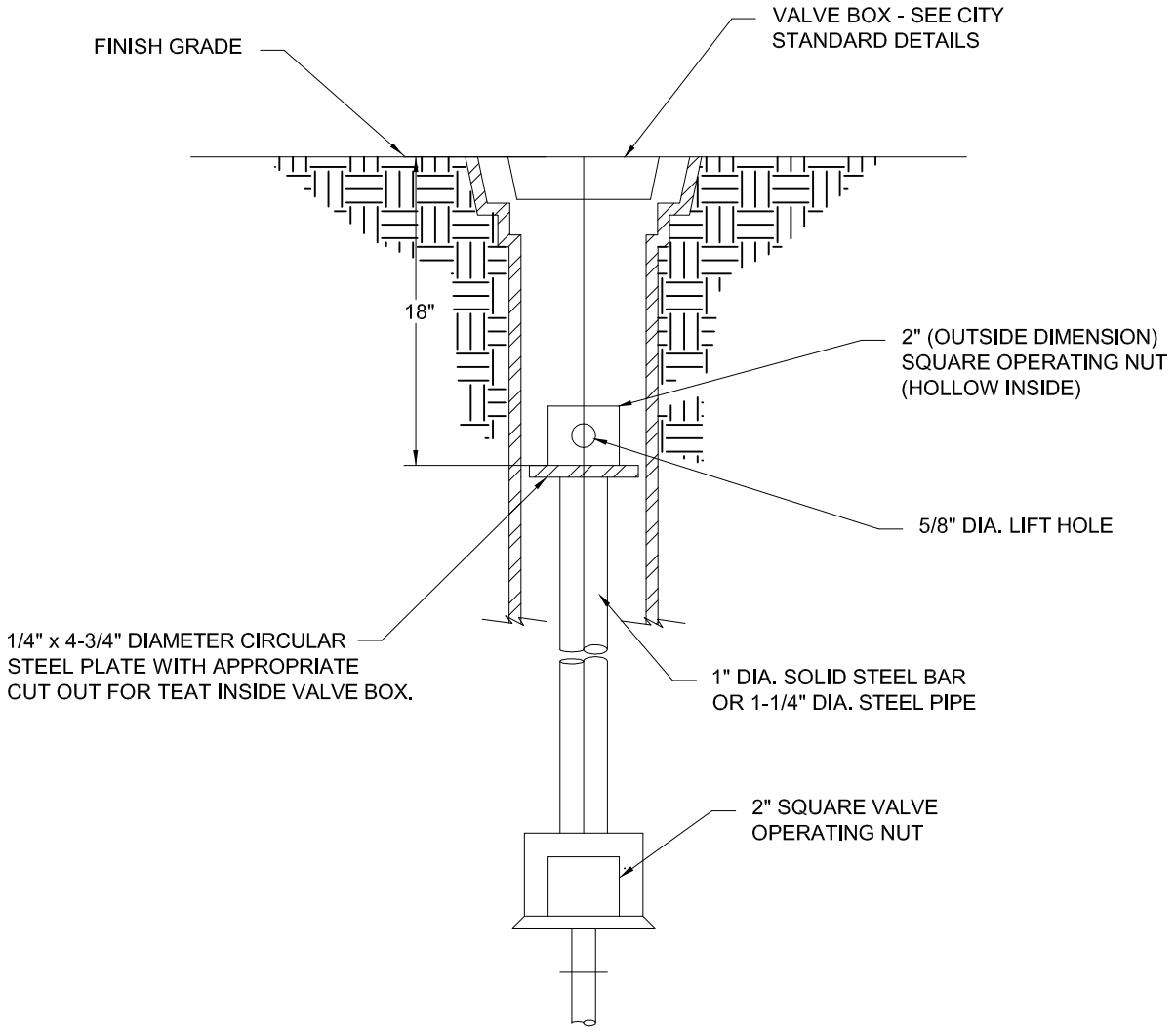

NOTE:
VALVE STEM EXTENSION TO BE USED **ONLY** WHEN VALVE NUT IS LOCATED MORE THEN THREE (3) FEET DEEP.

NOT TO SCALE

REVISIONS

NO.	DATE	DESCRIPTION	INIT.
1.	7/01/04	2004 D&CSM UPDATE	SDC

VALVE STEM EXTENSION

DWG. NO. 3

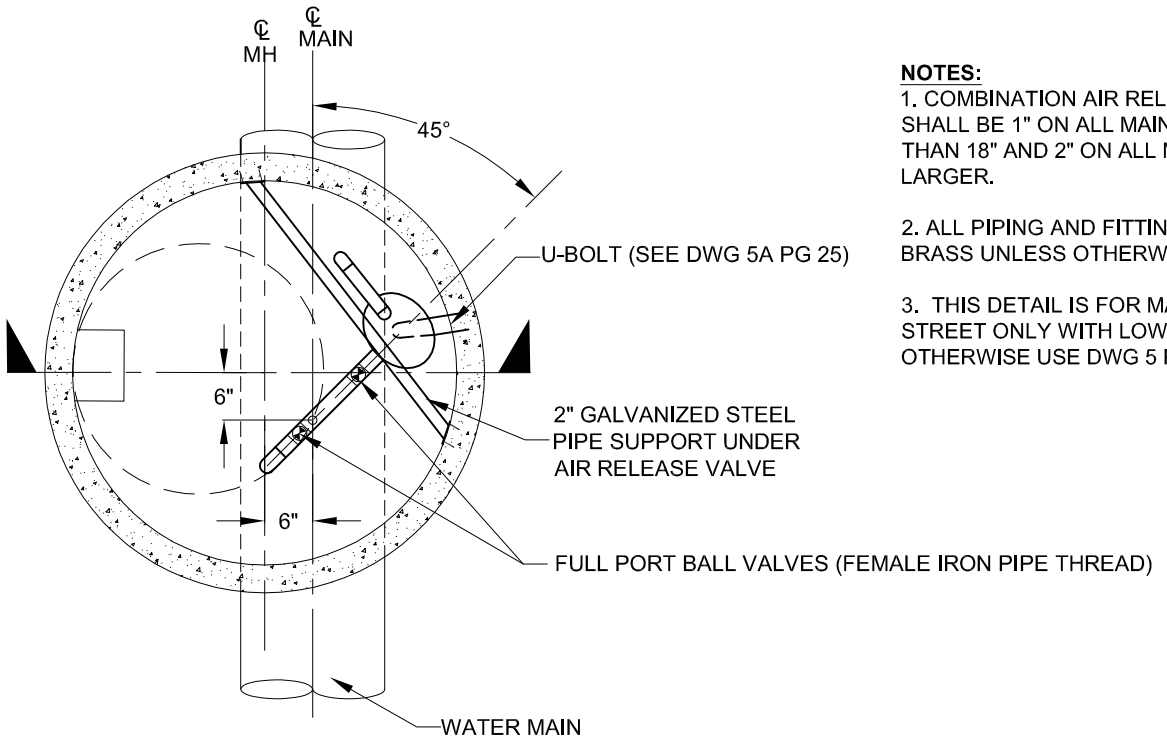

PLAN

NOTES:

1. COMBINATION AIR RELEASE VALVES SHALL BE 1" ON ALL MAINS SMALLER THAN 18" AND 2" ON ALL MAINS 18" OR LARGER.

2. ALL PIPING AND FITTINGS SHALL BE BRASS UNLESS OTHERWISE NOTED.

3. THIS DETAIL IS FOR MAINS IN A LOCAL STREET ONLY WITH LOW TRAFFIC. OTHERWISE USE DWG 5 PG 25

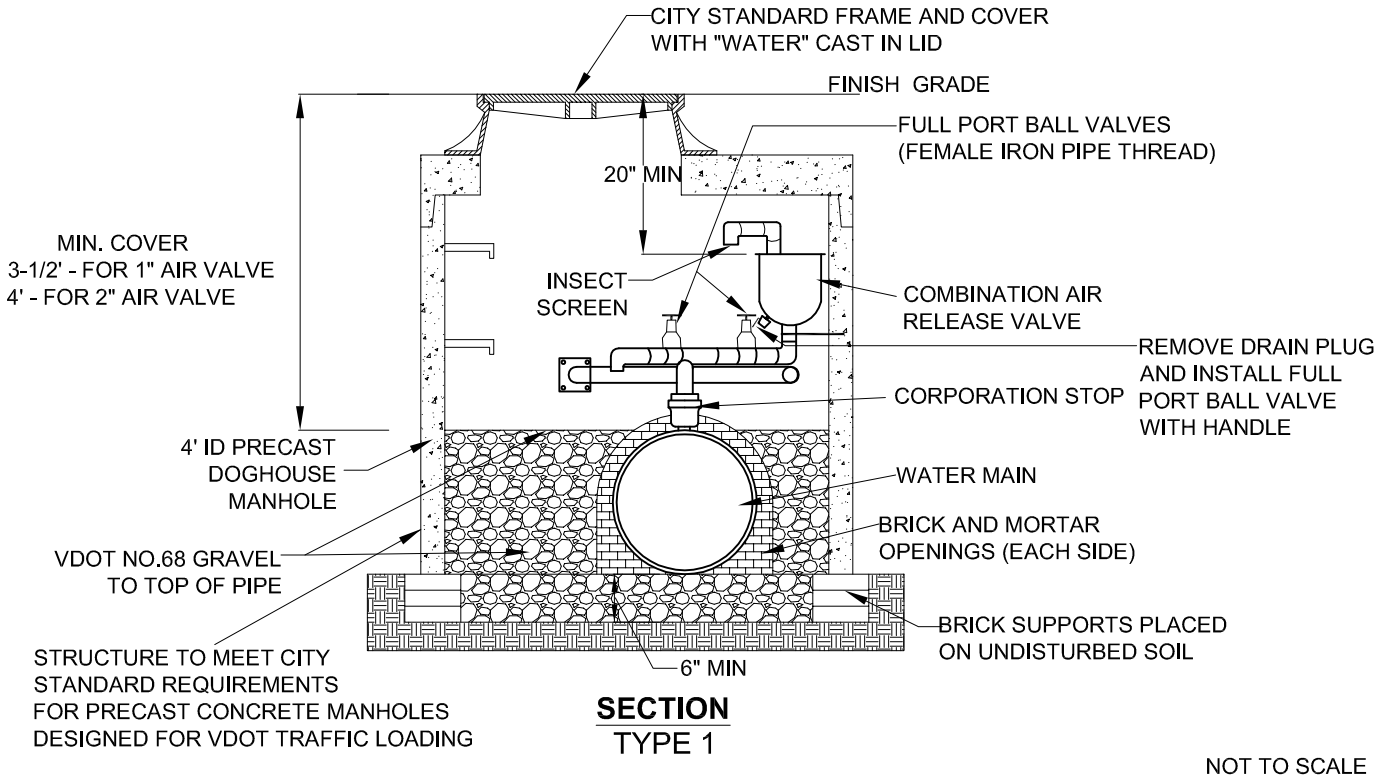

SECTION
TYPE 1

NOT TO SCALE

REVISIONS			
NO.	DATE	DESCRIPTION	INIT.
1.	9/22/04	2004 D&CSM UPDATE	SDC
2.	05/15/09	REMOVED TEXT	SDC

COMBINATION AIR/VACUUM VALVE ABOVE THE MAIN

DWG. NO. 4

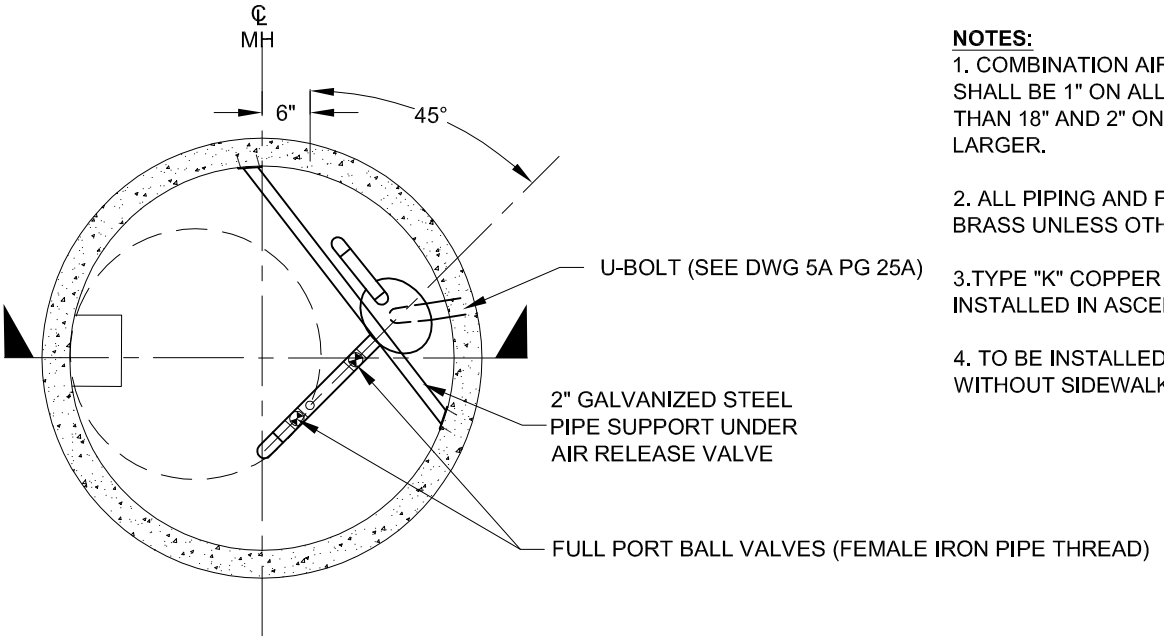

PLAN

NOTES:

1. COMBINATION AIR RELEASE VALVES SHALL BE 1" ON ALL MAINS SMALLER THAN 18" AND 2" ON ALL MAINS 18" OR LARGER.

2. ALL PIPING AND FITTINGS SHALL BE BRASS UNLESS OTHERWISE NOTED.

3.TYPE "K" COPPER SERVICE LINE TO BE INSTALLED IN ASCENDING GRADE

4. TO BE INSTALLED ON STREET SIDE WITHOUT SIDEWALK

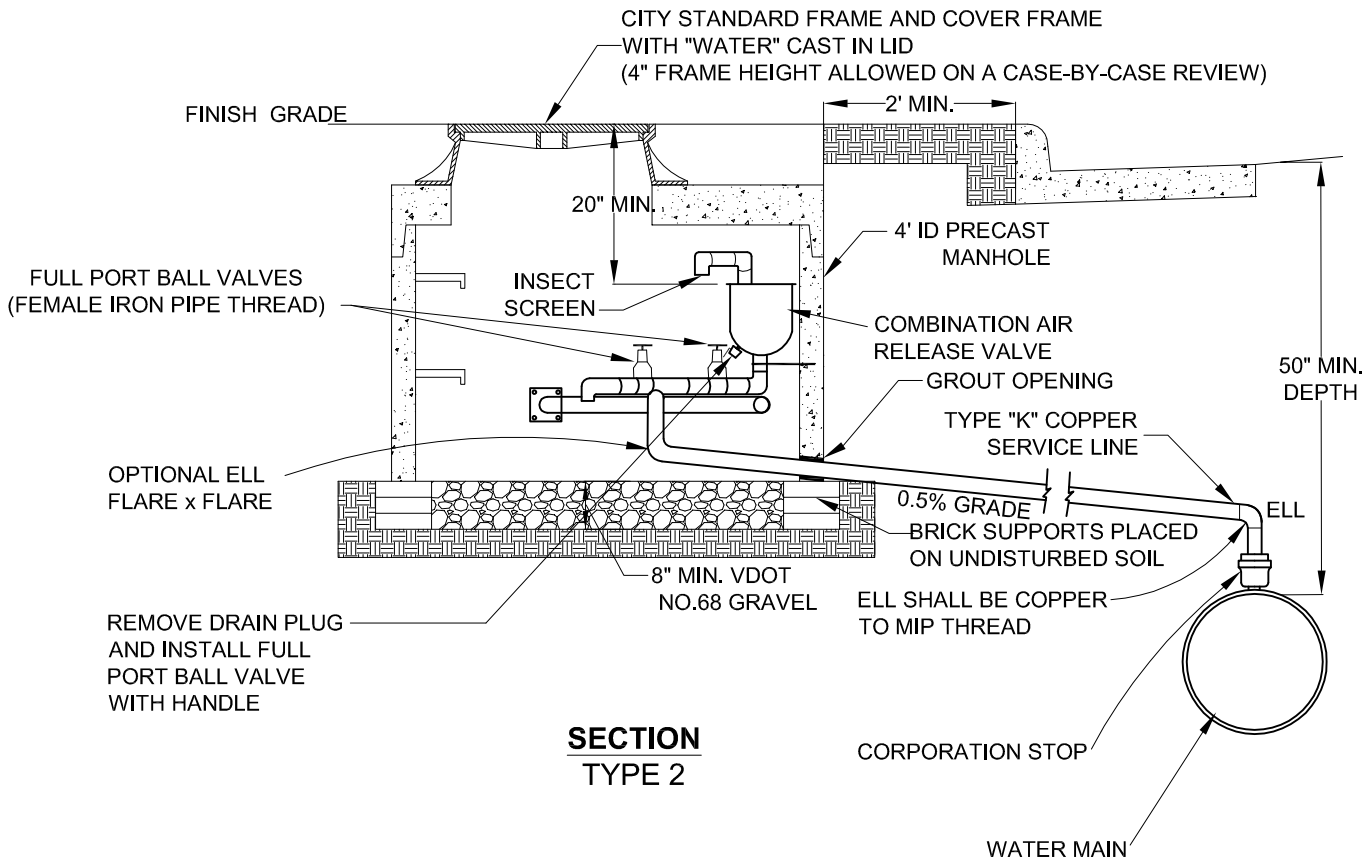

SECTION
TYPE 2

NOT TO SCALE

REVISIONS			
NO.	DATE	DESCRIPTION	INIT.
1.	9/22/04	2004 D&CSM UPDATE	SDC
2.	05/15/09	REMOVED TEXT	SDC

COMBINATION AIR/VACUUM VALVE OFFSET FROM THE MAIN

DWG. NO. 5

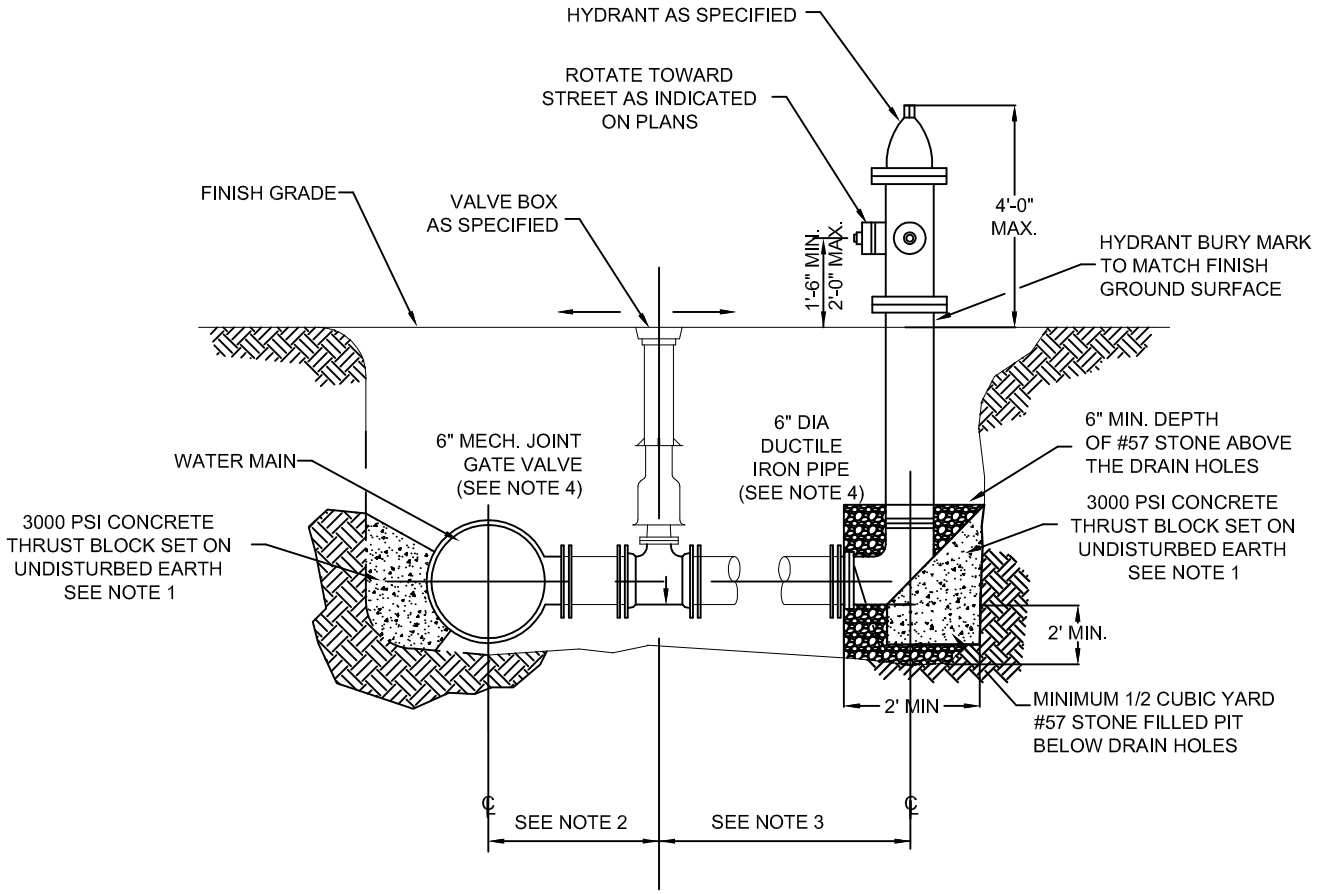

NOTES:

1) CONCRETE THRUST BLOCKS AT THE TEE AND HYDRANT ARE REQUIED ON ALL INSTALLATIONS EXCEPT WHERE REQUIRED BEARING SUPPORT CANNOT BE OBTAINED. BEARING AREA REQUIRED FOR FIRE HYDRANT THRUST BLOCK SHALL BE EQUAL TO CITY STANDARD FOR 90° BEND.

2) VALVE MUST BE ANCHORED TO THE MAIN TEE BY ONE OF THE FOLLOWING METHODS

   A) USE OF APPROVED HYDRANT TEE (WITH LOCKING SWIVEL FLANGE)
   B) USE OF APPROVED MECHANICAL JOINT RESTRAINING GLANDS ON EACH JOINT
   C) RODDING OR OTHER SPECIAL RESTRAINT DEVICE ONLY WHERE SPECIFICALLY APROVED BY DIRECTOR OF PUBLIC UTILITIES

3) WHERE REQUIRED BEARING SUPPORT FOR HYDRANT THRUST BLOCK CANNOT BE OBTAINED, JOINTS FROM VALVE TO HYDRANT SHALL BE RESTRAINED ACCORDING TO 2B.

4) DESIGNS REQUIRING FIRE HYDRANT LEAD LINES AND VALVES GREATER THAN 6" SIZE SHALL BE REDUCED TO 6" DIRECTLY ADJACENT TO THE FIRE HYDRANT. THRUST BLOCKS SHALL BE SIZED BASED ON THE LEAD LINE SIZE.

5.) FIRE HYDRANT WEEP HOLES SHALL NOT BE INSTALLED BELOW THE GROUND WATER TABLE. WHERE FIELD EXCAVATION REVEALS THIS CONDITION, REDESIGN WILL BE REQUIRED TO ADDRESS THE POTENTIAL CROSS CONNECTION.

NOT TO SCALE

NO.	DATE	DESCRIPTION	INIT.
1.	9/24/04	2004 D&CSM UPDATE	SDC
2.	3/28/06	VDH REVIEW AND COMMENT	DHG

FIRE HYDRANT

DWG. NO 6

PAGE 20

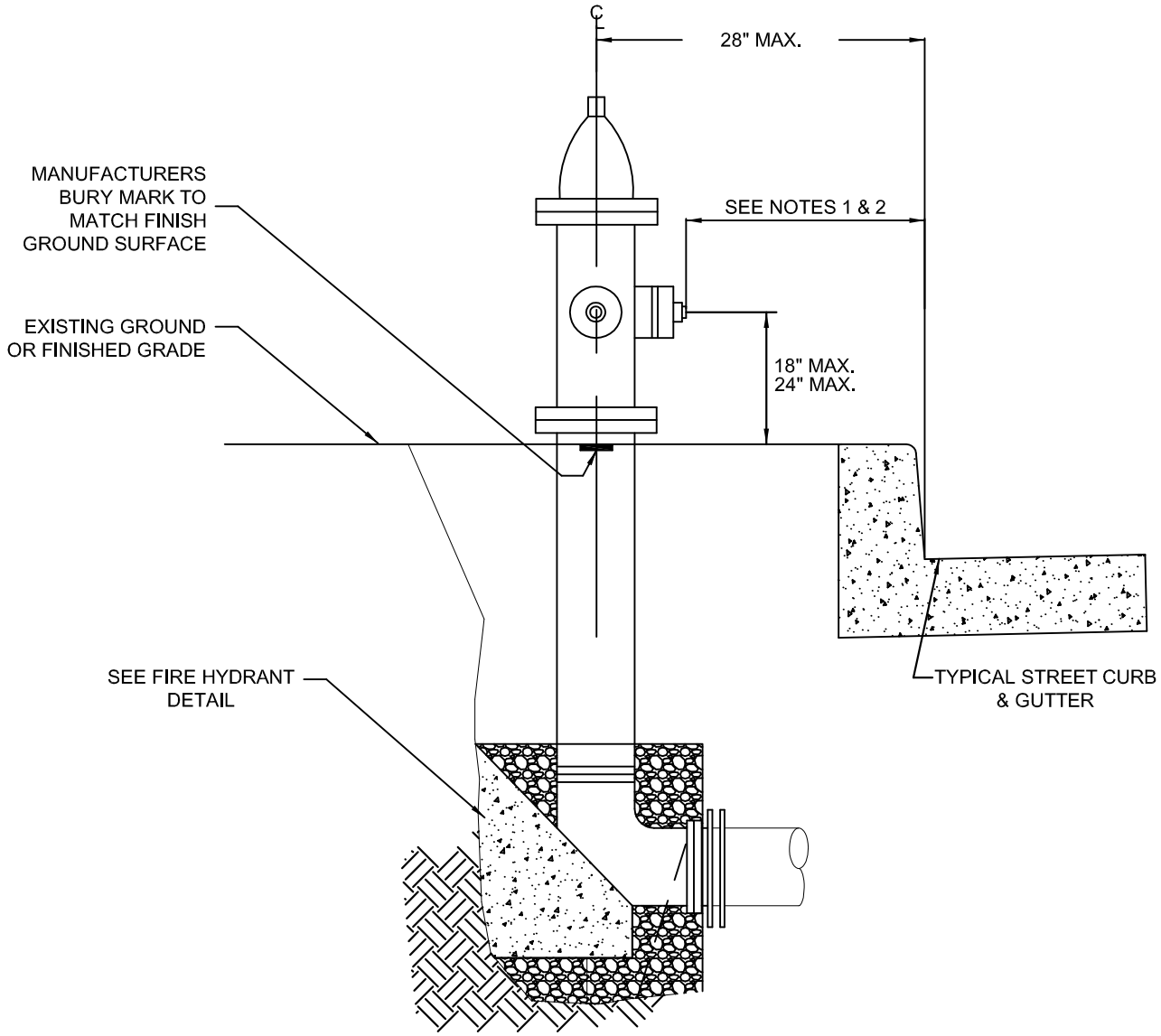

TYPICAL SECTION
STREET WITH CURB AND GUTTER

NOTES:
1) THE CLOSEST PART OF THE HYDRANT SHALL BE A MINIMUM OF 14" FROM THE FLOW LINE OF THE CURB.

2) DO NOT EXCEED 18" IF HYDRANT BARREL IS WITHIN SIDEWALK THAT DIRECTLY ADJOINS THE CURB.

NOT TO SCALE

NO.	DATE	DESCRIPTION	INIT.
1.	7/01/04	2004 D&CSM UPDATE	SDC

LOCATION OF FIRE HYDRANTS

DWG. NO 7

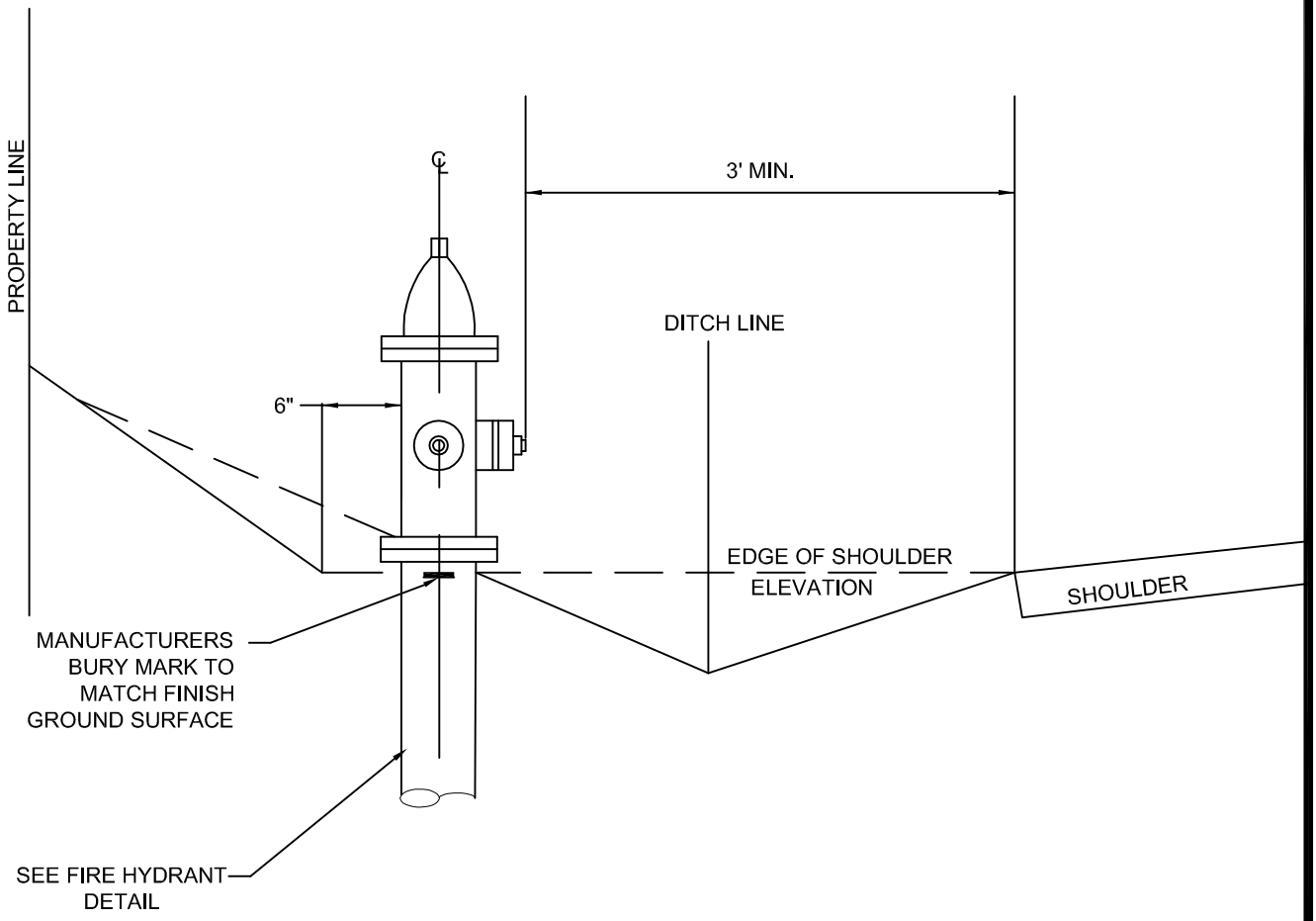

TYPICAL SECTION STREET WITHOUT CURB AND GUTTER

NOT TO SCALE

NO.	DATE	DESCRIPTION	INIT.
1.	7/01/04	2004 D&CSM UPDATE	SDC

LOCATION OF FIRE HYDRANTS

DWG. NO 8

PAGE 22

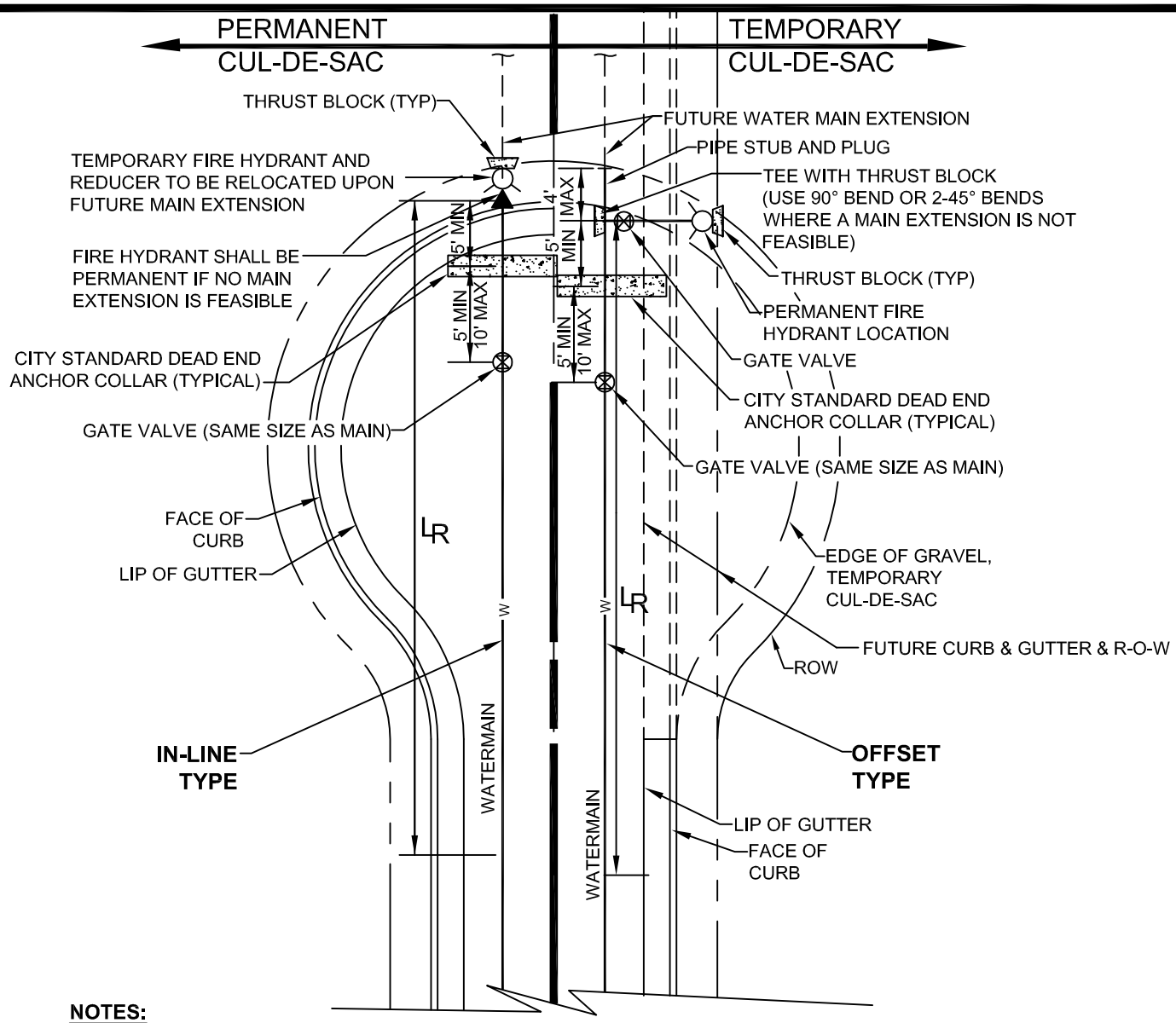

NOTES:

1. DESIGNER TO SPECIFY TYPE OF CONSTRUCTION ON PLANS. SPECIFICATION TO INCLUDE TYPE OF LAYOUT AND METHOD OF RESTRAINT.
2. METHODS OF RESTRAINT (USE EITHER A OR B)
   A. DEAD END ANCHOR WITH RESTRAINED JOINTS FROM THE ANCHOR TO THE FIRE HYDRANT
   B. RESTRAINED JOINT DESIGN OF LENGTH, L_R

   L_R = 50' FOR 8" MAINS

   CALCULATIONS ARE BASED ON A TEST PRESSURE OF 150 PSI WHEN INSTALLED IN ACCORDANCE WITH CITY STANDARD PIPE TRENCH DETAIL. DESIGNER SHALL SUBMIT CALCULATIONS FOR OTHER SIZES OR APPLICATIONS TO THE DIRECTOR FOR REVIEW AND APPROVAL
3. IF FIELD CONDITIONS DICTATE RELOCATION OF ANCHOR COLLAR, REFER TO ANCHOR BLOCK WITH RODDING ON "WATER MAIN TIE-IN" DRAWING

NOT TO SCALE

NO.	DATE	DESCRIPTION	INIT.
1.	7/01/04	2004 D&CSM UPDATE	DHG

FIRE HYDRANT LAYOUT

DWG. NO 9

PAGE 23

MINIMUM CONCRETE ANCHOR BLOCK DIMENSIONS - FEET

PIPE SIZE INCHES	DEGREE OF BEND	100 PSI WORKING PRESSURE L	100 PSI WORKING PRESSURE H	150 PSI WORKING PRESSURE L	150 PSI WORKING PRESSURE H	VOLUME OF CONCRETE CU. YD. (1)
6"	90°	2.5	1.5	2.5	2.0	0.24
	45°	2.0	1.0	2.5	1.0	0.13
	22 1/2°	1.0	1.0	1.5	1.0	0.06
	11 1/4°	1.0	1.0	1.5	1.0	0.06
	TEE/PLUG	2.5	1.5	2.5	2.0	0.24
8"	90°	2.5	2.5	4.0	2.0	0.40
	45°	2.0	1.5	2.5	2.0	0.19
	22 1/2°	1.5	1.0	2.5	1.0	0.10
	11 1/4°	1.5	1.0	2.0	1.0	0.09
	TEE/PLUG	2.5	2.5	4.0	2.0	0.40
12"	90°	4.0	3.0	5.0	4.0	0.76
	45°	3.5	2.0	4.0	2.5	0.46
	22 1/2°	2.5	1.5	2.5	1.0	0.24
	11 1/4°	2.5	1.5	2.0	1.5	0.16
	TEE/PLUG	4.0	3.0	5.0	4.0	0.76
16"	90°	5.5	4.0	7.5	4.5	1.43
	45°	4.0	3.0	5.0	3.5	0.76
	22 1/2°	3.0	2.0	3.0	3.0	0.30
	11 1/4°	3.0	2.0	4.5	3.0	0.20
	TEE/PLUG	5.5	4.0	7.5	4.5	1.43
20"	90°	6.5	5.5	8.5	6.0	1.99
	45°	5.0	4.0	6.0	4.5	1.11
	22 1/2°	3.5	3.0	4.5	3.0	0.58
	11 1/4°	3.5	3.0	4.5	3.0	0.58
	TEE/PLUG	6.5	5.5	8.5	6.0	1.99
24"	90°	8.0	6.0	11.0	6.5	2.37
	45°	5.5	5.0	7.0	5.5	1.36
	22 1/2°	4.0	3.5	5.0	4.0	0.50
	11 1/4°	4.0	3.5	5.0	4.0	0.50
	TEE/PLUG	8.0	6.0	11.0	6.5	2.37

(1) APPROXIMATE VOLUME OF CONCRETE BASED ON 100 PSI WORKING PRESSURE

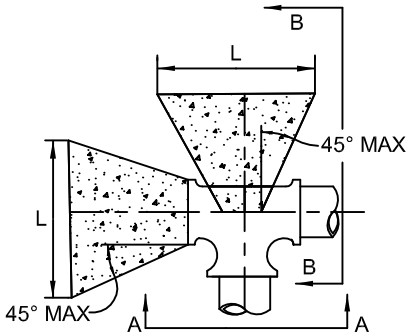

PLAN VIEW

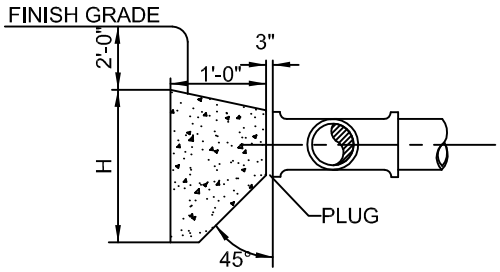

SECTION A-A

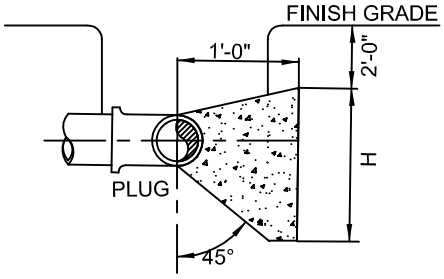

SECTION B-B

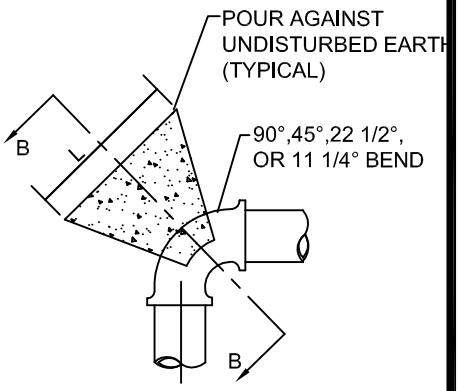

PLAN

NOTES:

1. CONCRETE SHALL HAVE 3,000 PSI STRENGTH AT 28 DAYS.
2. THE ABOVE TABLE IS BASED ON 2,000 PSF SOIL BEARING CAPACITY AND WORKING PRESSURE AS INDICATED.
3. ANCHOR BLOCK DESIGN FOR OTHER DESIGN CIRCUMSTANCES OR PIPE LARGER THAN 24" SHALL BE REVIEWED ON AN INDIVIDUAL BASIS BY THE DIRECTOR.
4. HEIGHT OF CONCRETE ANCHOR BLOCK ABOVE PIPE CENTERLINE IS 1/3 THE H DIMENSION.
5. PROVIDE A 10 MIL PLASTIC BARRIER BETWEEN CONCRETE AND PIPE. OBTAIN INSPECTOR'S APPROVAL PRIOR TO PLACEMENT OF CONCRETE.

NOT TO SCALE

NO.	DATE	DESCRIPTION	INIT.
1.	7/01/04	2004 D&CSM UPDATE	DHG

THRUST BLOCKS

DWG. NO 10

PAGE 24

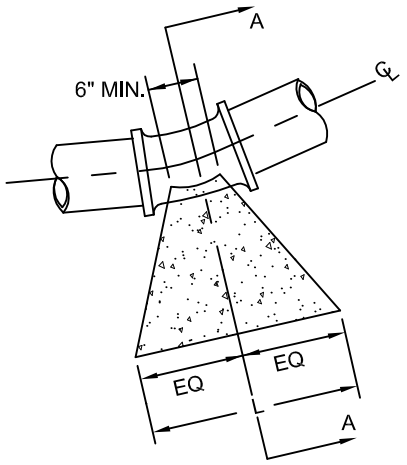

ELEVATION

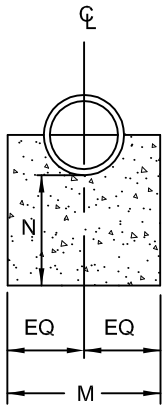

SECTION A-A

BUTTRESS FOR LOWER VERTICAL BENDS											
DEGREE OF BEND		SIZE									
		3"	4"	6"	8"	10"	12"	16"	20"	24"	30"
11 1/4°	L	6"	6"	6"	8"	8'	8"	1'-1"	1'-5"	1'-10"	2'-8"
	M	1'-0"	1'-0"	1'-2"	1'-4"	1'-6"	2'-0"	2'-4"	2'-8"	3'-0"	3'-4"
	N	8"	8"	8"	8"	8"	8"	9"	10"	12"	1'-2"
22 1/2°	L	6"	8"	10"	11"	1'-3"	1'-4"	2'-1"	2'-9"	3'-7"	5'-3"
	M	1'-0"	1'-0"	1'-2"	1'-2"	1'-4"	1'-6"	2'-0"	2'-4"	2'-8"	3'-2"
	N	8"	8"	8"	8"	9"	9"	12"	1'-2"	1'-4"	1'-6"
45°	L	10"	1'-0"	1'-2"	1'-9"	2'-5"	2'-8"	4'-0"	5'-6"	6'-0"	8'-2"
	M	1'-0"	1'-0"	1'-2"	1'-4"	1'-6"	2'-0"	2'-4"	2'-8"	3'-6"	4'-0"
	N	8"	8"	8"	8"	12"	1'-2"	1'-6"	2'-0"	2'-6"	3'-0"

NOTES:

1. CONCRETE SHALL HAVE 3,000 PSI STRENGTH AT 28 DAYS.
2. CARRY ALL BEARING SURFACES TO UNDISTURBED EARTH OR FIRM SUBGRADE.
3. THE ABOVE TABLE IS BASED ON 2,000 PSF SOIL BEARING CAPACITY AND 150 PSI WORKING PRESSURE.
4. ANCHOR BLOCK DESIGN FOR OTHER DESIGN CIRCUMSTANCES OR PIPE LARGER THAN 30" SHALL BE REVIEWED ON AN INDIVIDUAL BASIS BY THE DIRECTOR.
5. PROVIDE A 10 MIL PLASTIC BARRIER BETWEEN CONCRETE AND PIPE. OBTAIN INSPECTOR'S APPROVAL PRIOR TO PLACEMENT OF CONCRETE.

NOT TO SCALE

REVISIONS			
NO.	DATE	DESCRIPTION	INIT.
1.	7/01/04	2004 D&CSM UPDATE	DHG

BUTTRESSES FOR 11 1/4°, 22 1/2°, AND 45° LOWER VERTICAL BENDS

DWG. NO. 11

WHERE FOUR REINFORCING BARS ARE USED SYMETRICALLY PLACE TWO BARS AT THE BEND AND OTHERS AS DEPICTED IN THE ELEVATION VIEW

EMBED REINFORCING BARS A MINIMUM OF 36 DIAMETERS INCLUDING THE HOOK. PAINT THE EXPOSED BARS WITH TWO COATS OF BITUMINOUS PAINT.

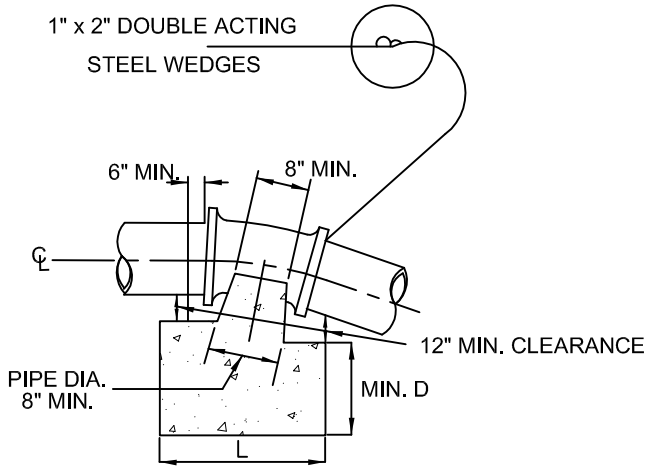

ELEVATION

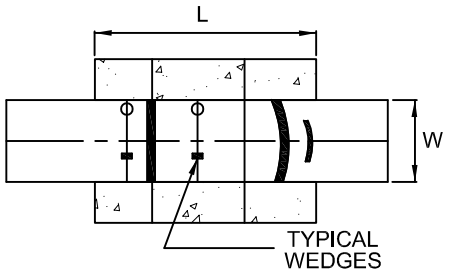

PLAN

BUTTRESS FOR LOWER VERTICAL BENDS											
DEGREE OF BEND		SIZE									
		3"	4"	6"	8"	10"	12"	16"	20"	24"	30"
11 1/4°	L	1'-6"	1'-6"	2'-0"	2'-0"	2'-3"	2'-6"	3'-3"	4'-0"	4'-6"	5'-0"
	W	1'-6"	1'-6"	2'-0"	2'-0"	2'-3"	2'-6"	3'-3"	4'-0"	4'-6"	5'-0"
	D	1'-6"	1'-6"	1'-6"	2'-0"	2'-0"	2'-3"	2'-6"	2'-6"	3'-0"	3'-0"
REINF. BARS		3#7	3#7	3#7	3#8	3#8	3#8	3#8	3#10	3#10	3#10
22 1/2°	L	1'-6"	2'-0"	2'-6"	2'-9"	3'-6"	4'-0"	4'-6"	5'-6"	6'-0"	7'-0"
	W	1'-6"	2'-0"	2'-6"	2'-9"	3'-6"	4'-0"	4'-6"	5'-6"	6'-0"	7'-0"
	D	1'-6"	1'-6"	2'-6"	2'-3"	2'-3"	2'-6"	3'-0"	3'-6"	4'-0"	4'-6"
REINF. BARS		3#7	3#7	3#7	3#8	3#8	4#8	4#8	3#10	4#10	4#10
45°	L	2'-0"	2'-6"	3'-0"	3'-6"	4'-0"	4'-6"	6'-0"	7'-6"	8'-6"	10'-0"
	W	2'-0"	2'-6"	3'-0"	3'-6"	4'-0"	4'-6"	6'-0"	7'-6"	8'-6"	10'-0"
	D	1'-6"	2'-0"	2'-0"	2'-6"	2'-9"	3'-0"	3'-6"	4'-0"	4'-6"	5'-0"
REINF. BARS		3#7	3#7	3#7	3#8	4#8	4#8	4#10	4#10	4#10	4#11

NOTES:

1. CONCRETE SHALL HAVE 3,000 PSI STRENGTH AT 28 DAYS.
2. CARRY ALL BEARING SURFACES TO UNDISTURBED EARTH OR FIRM SUBGRADE.
3. THE ABOVE TABLE IS BASED ON 2,000 PSF SOIL BEARING CAPACITY AND 150 PSI WORKING PRESSURE.
4. ANCHOR BLOCK DESIGN FOR OTHER DESIGN CIRCUMSTANCES OR PIPE LARGER THAN 30" SHALL BE REVIEWED ON AN INDIVIDUAL BASIS BY THE DIRECTOR.
5. PROVIDE A 10 MIL PLASTIC BARRIER BETWEEN CONCRETE AND PIPE. OBTAIN INSPECTOR'S APPROVAL PRIOR TO PLACEMENT OF CONCRETE.

NOT TO SCALE

REVISIONS			
NO.	DATE	DESCRIPTION	INIT.
1.	7/01/04	2004 D&CSM UPDATE	DHG

ANCHORAGE FOR 11 1/4°, 22 1/2°, AND 45° UPPER VERTICAL BENDS

DWG. NO. 12

PAGE 26

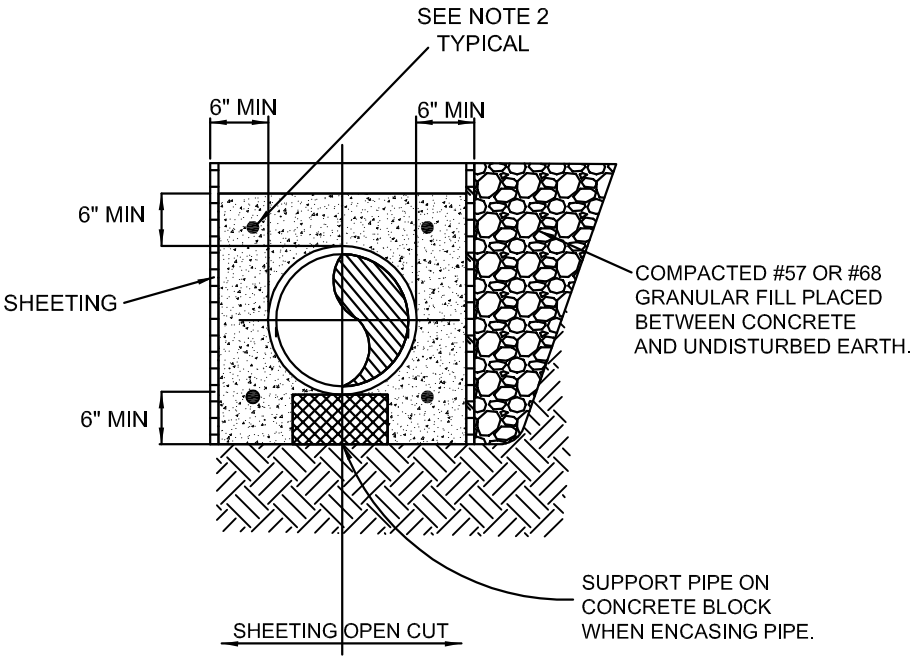

SECTION VIEW

NOTES:

1. CONTROL JOINTS AND PIPE JOINTS FOR ENCASEMENTS SHALL COINCIDE FOR SPACING. THE MAXIMUM DISTANCE BETWEEN CONTROL JOINTS SHALL BE 24 FEET.
2. FOUR #4 STEEL REINFORCING BARS 4' LONG SHALL BE PROVIDED ACROSS CONTROL JOINTS FOR ENCASEMENTS.
3. DURING INSTALLATION PROTECT PIPE AGAINST FLOTATION.
4. AT UTILITY CROSSINGS, THE CONCRETE ENCASEMENT SHALL EXTEND TEN FEET MINIMUM ON EACH SIDE OF THE LINE AT THE POINT OF CROSSING.
5. REFER TO PIPE TRENCH DETAIL FOR ADDITIONAL INFORMATION.
6. ENCASEMENT GENERALLY APPLICABLE WHERE TRENCH BOTTOM IS UNSTABLE, IN DRAINAGE SWALES OR STREAM CROSSINGS.

NOT TO SCALE

REVISIONS			
NO.	DATE	DESCRIPTION	INIT.
1.	7/01/04	2004 D&CSM UPDATE	SDC

CONCRETE ENCASEMENT DETAIL

DWG. NO. 13

THIS PAGE INTENTIONALLY LEFT BLANK

NOT TO SCALE

REVISIONS			
NO.	DATE	DESCRIPTION	INIT.
1.	7/01/04	2004 D&CSM UPDATE	DHG
2.	05/15/09	DELETED	SDC

ANCHOR COLLAR

DWG. NO. 14

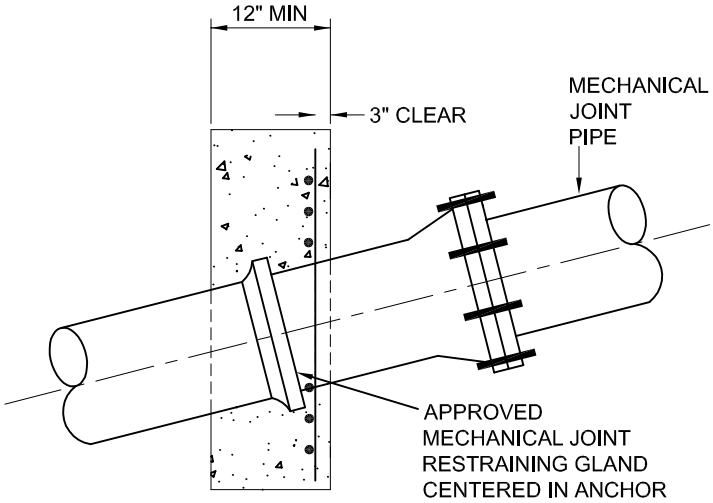

PLAN VIEW

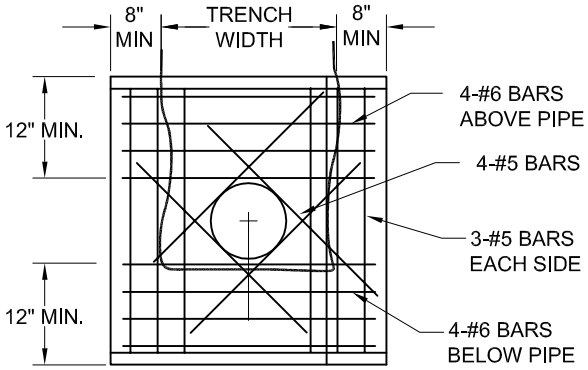

ELEVATION VIEW
(PIPE NOT SHOWN)

NOTE:
1. CONCRETE STRENGTH (F'c) = 3,000 PSI @ 28 DAYS.
2. ALL REINFORCING STEEL TO BE ASTM A-615, GRADE 60
3. CARRY ALL BEARING SURFACES TO FIRM SUBGRADE.
4. SLOPE ANCHORS APPLICABLE FOR WATER, SANITARY SEWER, AND STORM SEWER INSTALLATION ON GRADES EXCEEDING 20% SLOPE.
5. REQUIRED SPACING SHALL BE AS FOLLOWS:
   A) NOT OVER 36' C-C ON GRADES 20% AND UP TO 35%
   B) PIPES GREATER THAN 8" DIA. OR SLOPES OVER 35% WILL REQUIRE SPECIAL DESIGN AND DIRECTOR APPROVAL.
6. WRAP THE PIPE WITH POLYETHYLENE BAGS TO 6" OUTSIDE THE CONCRETE ENCASEMENT.
7. ALL BACKFILL MATERIAL WITHIN 10' OF A CONCRETE ANCHOR TO BE COMPACTED TO 95% THEORETICAL DENSITY AS DETERMINED BY ASTM D 698, WITH 6" MAXIMUM LIFTS.
8. BEARING AREA IS BASED ON 150 PSI TEST PRESSURE AND A SOIL BEARING PRESSURE OF 2000 PSF.

NOT TO SCALE

REVISIONS

NO.	DATE	DESCRIPTION	INIT.
1.	7/01/04	2004 D&CSM UPDATE	DHG
2.	5/8/09	2009 D&CSM UPDATE	JHF

CONCRETE SLOPE ANCHOR

DWG. NO. 15

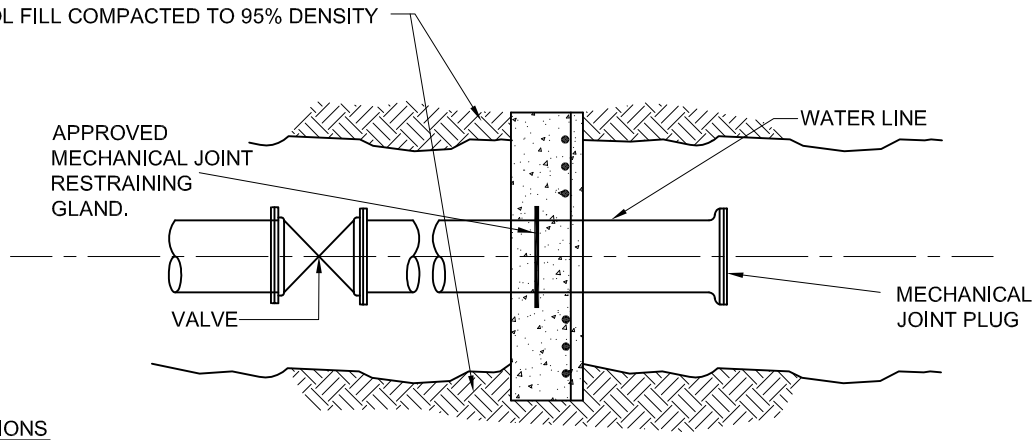

PLAN VIEW

DEAD END ANCHOR DIMENSIONS

LINE SIZE	"A"	"B"	"C"	"D"
6"	2'-0"	1'-0"	1'-6"	1'-0"
8"	2'-0"	1'-3"	1'-6"	1'-0"
10"	2'-3"	1'-6"	1'-6"	1'-6"
12"	2'-6"	2'-0"	1'-6"	1'-6"
16"	2'-9"	3'-0"	2'-0"	1'-6"
24"	3'-6"	4'-0"	2'-6"	2'-0"

"A" = TRENCH WIDTH
"B" = SIDE DEPTH BEYOND TRENCH
"C" = DEPTH TO CENTER OF PIPE
"D" = DEPTH BEYOND TRENCH BOTTOM

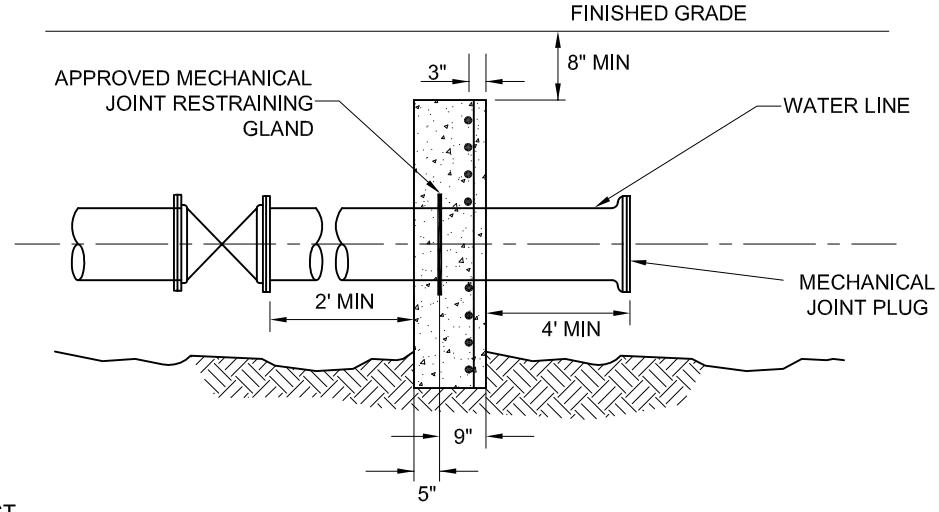

ELEVATION VIEW

NOTES:

1. BEARING AREA IS BASED ON 150 PSI TEST PRESSURE AND A SOIL BEARING PRESSURE OF 2000 PSF.
2. INCREASE BLOCK DIMENSIONS AS REQUIRED ON SOILS WITH LOWER BEARING VALUES
3. CONCRETE ANCHOR MAY BE INSTALLED ON OPPOSITE SIDE OF VALVE PROVIDED THAT THE VALVE & PLUG ARE RESTRAINED TO THE ANCHOR BLOCK.
4. ALL REINFORCING STEEL TO BE ASTM A-615, GRADE 60.
5. CONCRETE STRENGTH (f'c) SHALL BE 3,000 PSI.
6. DEAD END ANCHOR DESIGN FOR PIPES LARGER THAN 24" SHALL BE REVIEWED ON AN INDIVIDUAL BASIS.
7. ALL BACKFILL MATERIAL WITHIN 10' OF A CONCRETE ANCHOR TO BE COMPACTED TO 95% THEORETICAL DENSITY AS DETERMINED BY ASTM D 698, WITH 6" MAXIMUM LIFTS.
8. WRAP THE PIPE WITH POLYETHYLENE BAGS TO 6" OUTSIDE THE CONCRETE ENCASEMENT.

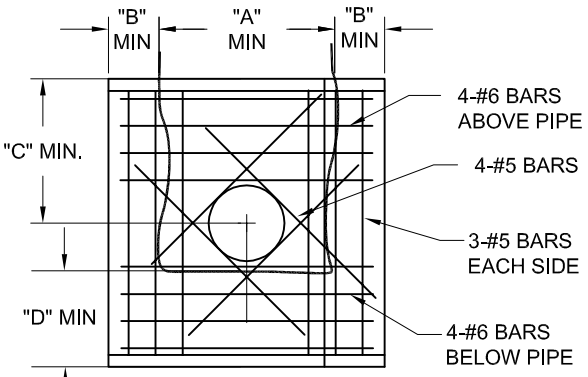

SECTION VIEW

NOT TO SCALE

REVISIONS			
NO.	DATE	DESCRIPTION	INIT.
1.	9/21/04	2004 D&CSM UPDATE	SDC
2.	02/10/09	REVISE DEPTH BELOW GRADE	SDC

DEAD END ANCHOR FOR MAIN EXTENSION

DWG. NO. 16

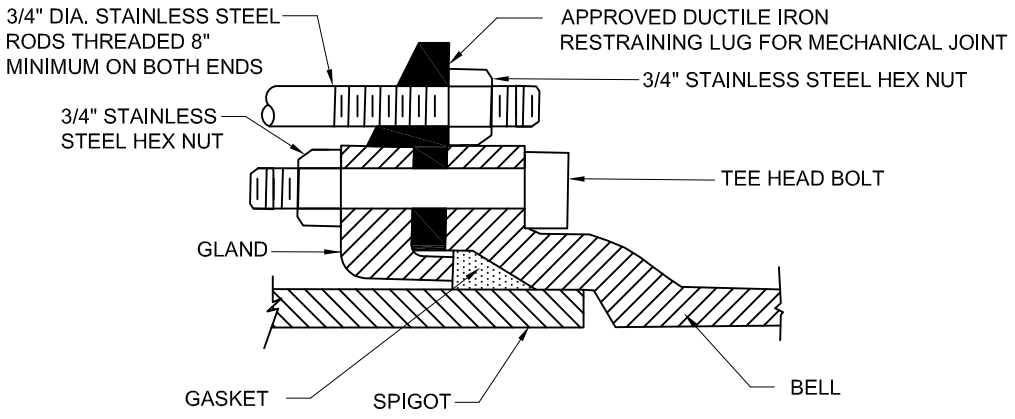

STANDARD CONNECTION

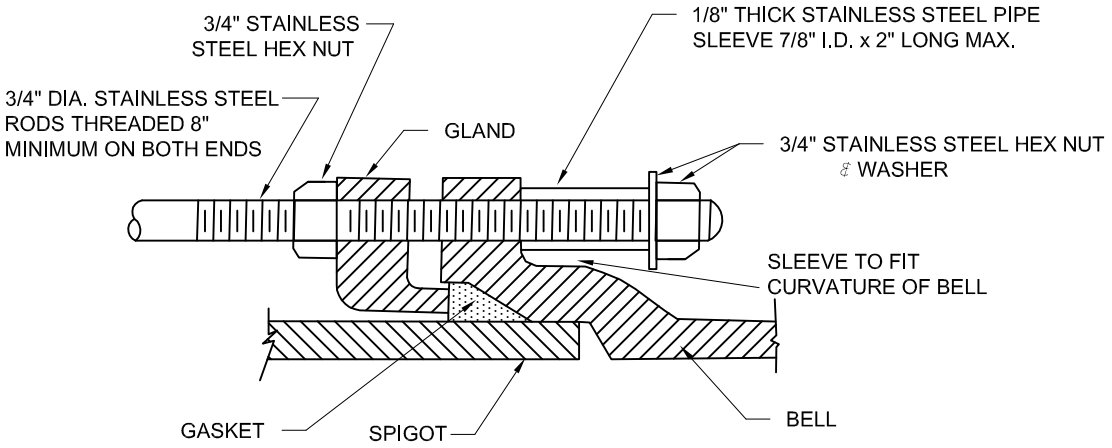

ALTERNATE CONNECTION

NOT TO SCALE

NOTES

1. ALL RODS, NUTS, WASHERS & SLEEVES TO BE 304 STAINLESS STEEL.
2. OTHER DESIGNS FOR CONNECTIONS MUST BE SUBMITTED FOR REVIEW & APPROVAL AND EQUAL OR EXCEED THIS STANDARD FOR STRUCTURAL AND CORROSION CHARACTERISTICS.
3. USE RODDING OR OTHER RESTRAINT DEVICE ONLY WHERE SPECIFICALLY APPROVED BY THE DIRECTOR OF PUBLIC UTILITIES.

VALVE SIZE	NUMBER OF 3/4" DIA RODS REQUIRED
3"	2
4"	2
6"	2
8"	2
10"	4
12"	6
16"	8
20"	12
24"	16
30"	20

REVISIONS

NO.	DATE	DESCRIPTION	INIT.
1.	7/01/04	2004 D&CSM UPDATE	SDC

RODDING

DWG. NO. 17

PAGE 31

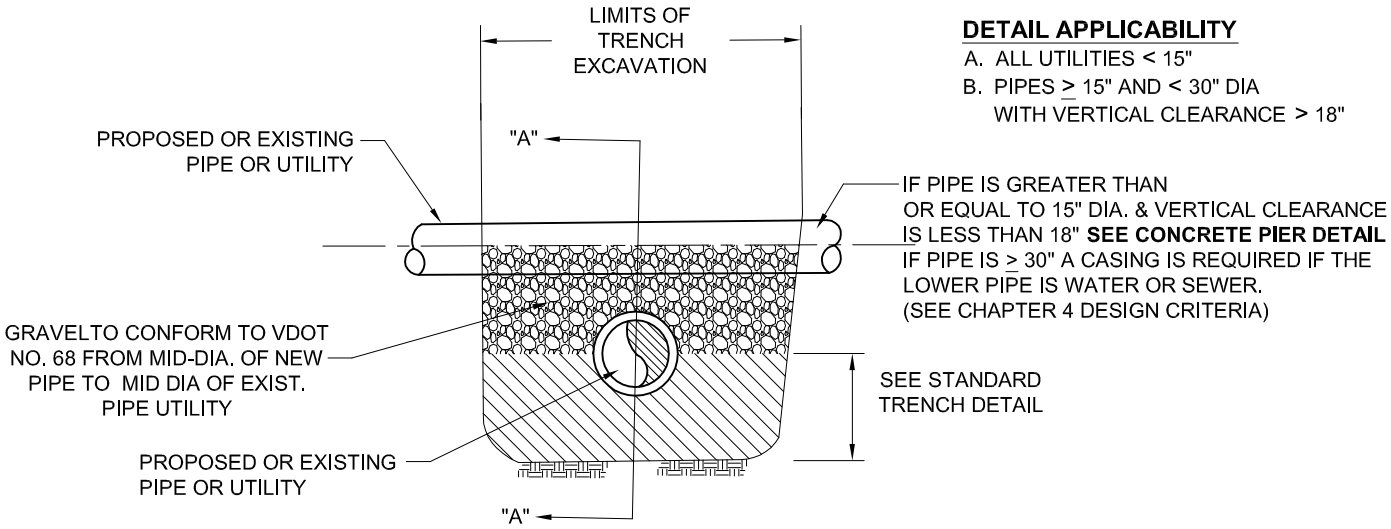

DETAIL APPLICABILITY

A. ALL UTILITIES < 15"
B. PIPES ≥ 15" AND < 30" DIA
WITH VERTICAL CLEARANCE > 18"

LONGITUDINAL SECTION

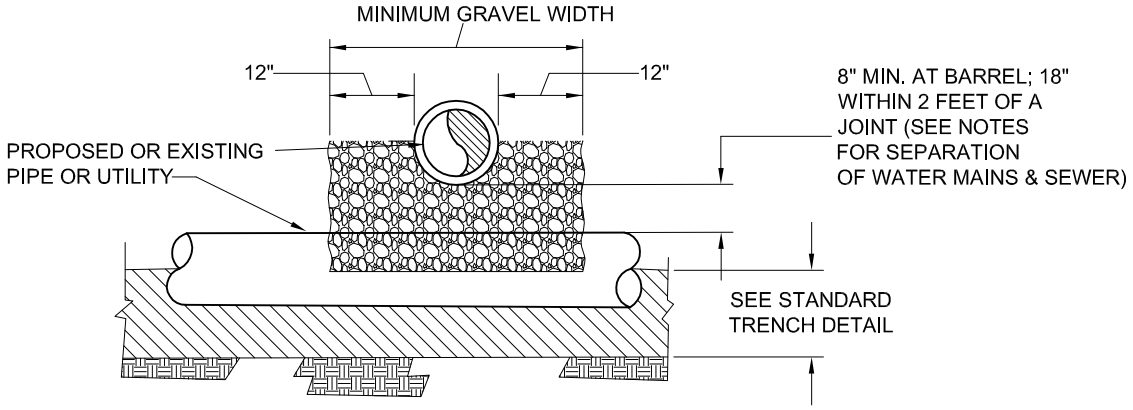

CROSS SECTION
"A-A"

NOTES

1. SEPARATION OF WATER MAINS AND SEWERS AS FOLLOWS:
   A. UNDER NORMAL CONDITIONS WATER LINES CROSSING SEWERS SHALL BE LAID TO PROVIDE A SEPARATION OF AT LEAST 18 INCHES BETWEEN THE BOTOM OF THE WATER LINE AND THE TOP OF THE SEWER WHENEVER POSSIBLE.
   B. UNDER UNUSUAL CONDITIONS WHEN LOCAL CONDITIONS PREVENT A VERTICAL SEPARATION DESCRIBED IN A. (ABOVE) THE FOLLOWING CONSTRUCTION SHALL BE USED:
      1. SEWERS PASSING OVER OR UNDER WATER MAINS SHALL BE CONSTRUCTED OF THE MATERIALS REQUIRED FOR WATER MAIN CONSTRUCTION AND PRESSURE TESTED IN PLACE TO 30 PSI WITHOUT LEAKAGE.
      2. WATER LINES PASSING UNDER SEWERS SHALL, IN ADDITION, BE PROTECTED BY PROVIDING:
         A. A VERTICAL SEPARATION OF AT LEAST 18 INCHES BETWEEN THE BOTTOM OF THE SEWER AND THE TOP OF THE WATER LINE:
         B. ADEQUATE STRUCTURAL SUPPORT FOR THE SEWERS TO TO PROTECT EXCESSIVE DEFLECTION OF THE JOINTS AND THE SETTLING ON AND BREAKING OF THE WATER LINE; AND
         C. THAT THE LENGTH OF THE WATER AND SEWER LINE BE CENTERED AT THE POINT OF CROSSING SO THAT THE JOINTS SHALL BE EQUIDISTANT AND SEPARATED AS FAR AS POSSIBLE.

NOT TO SCALE

REVISIONS

NO.	DATE	DESCRIPTION	INIT.
1.	7/01/04	2004 D&CSM UPDATE	SDC
2.	2/22/06	VDEQ REVIEW COMMENTS	DHG

UTILITY AND PIPE CROSSINGS

DWG. NO. 18

PAGE 32

L=D+4'-0"
WHERE D = PIPE DIAMETER

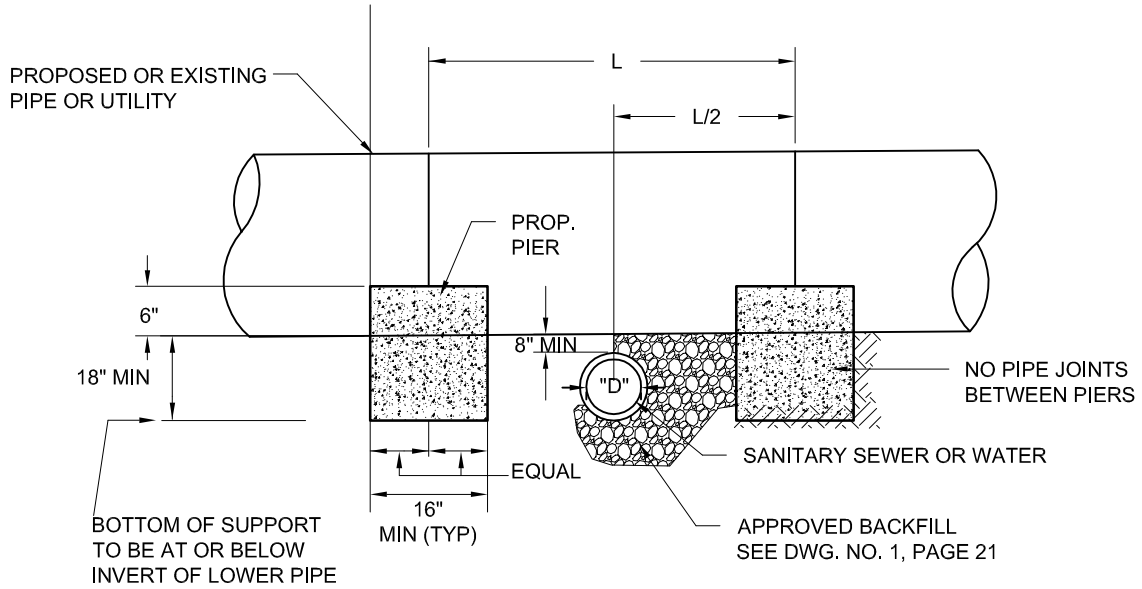

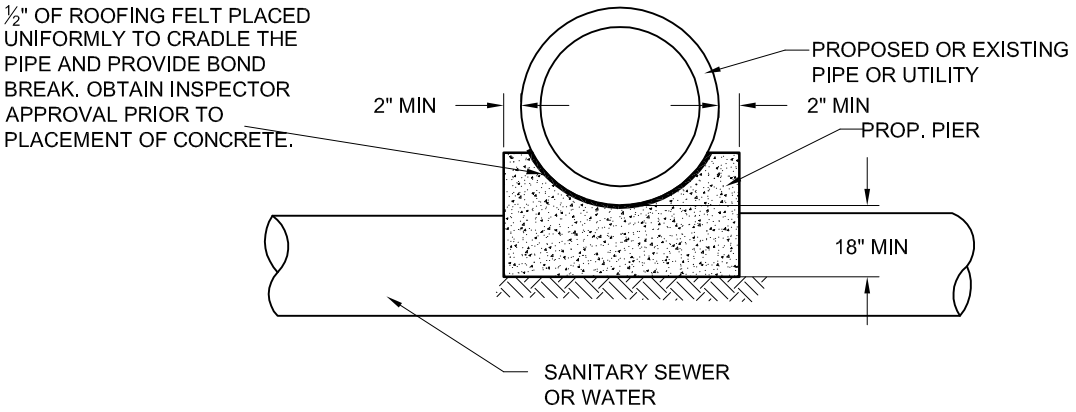

NOTE:

1. PIER ONLY WHEN LARGE DIAMETER PIPE (15" OR LARGER) CROSSES OVER SANITARY SEWER OR WATER, WITH VERTICAL CLEARANCE OF LESS THAN 18". IF UPPER PIPE IS 30" OR LARGER A CASING DESIGN IS REQUIRED FOR WATER OR SANITARY SEWER PIPE BELOW; AS VERTICAL CLEARANCE FOR A CASING SHOULD BE DETERMINED BASED ON STRUCTURAL REQUIREMENTS FOR DEFLECTION.
2. PIER TO BE BUILT ON UNDISTURBED EARTH. CONCRETE TO BE CLASS "A3"
3. REFER TO NOTES FOR SEPARATION OF WATER MAINS AND SEWERS ON STANDARD DRAWING NO. 18

NOT TO SCALE

REVISIONS

NO.	DATE	DESCRIPTION	INIT.
1.	7/01/04	2004 D&CSM UPDATE	ELR

CONCRETE PIER FOR UTILITY AND PIPE CROSSINGS

DWG. NO. 19

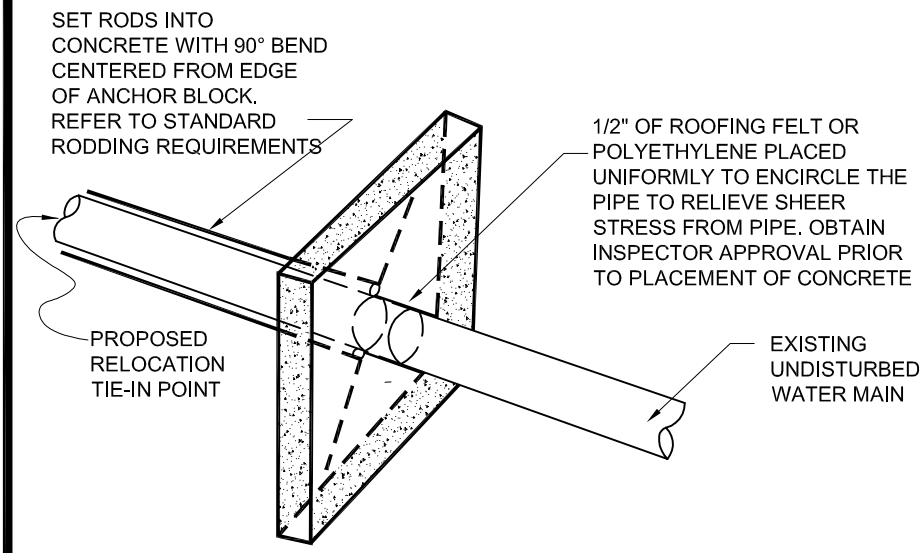

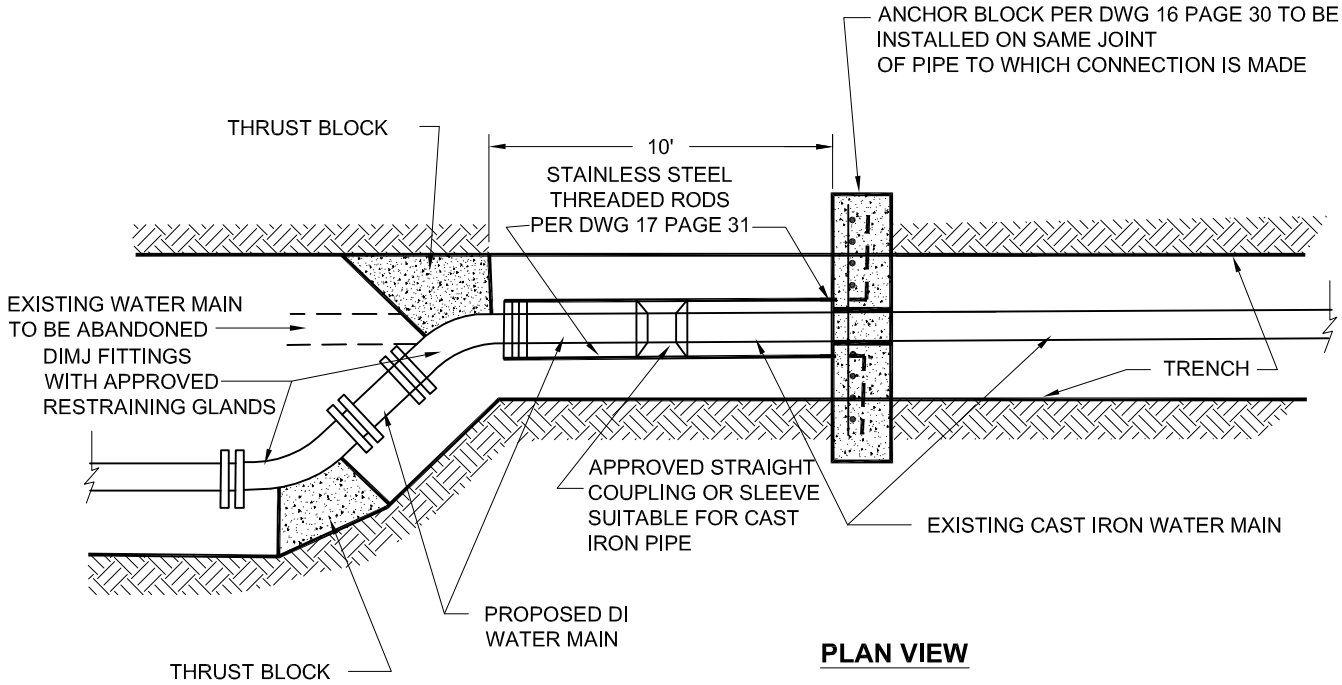

PLAN VIEW

PROCEDURE:

1. CONSTRUCT ANCHOR BLOCK AT LEAST **SEVEN (7) DAYS** PRIOR TO WATER TIE-IN. (3 DAYS USING HIGH EARLY STRENGTH CONCRETE)
2. OBTAIN CITY APPROVAL OF ANCHOR BLOCK AND SCHEDULE DATE OF TIE-IN.
3. EXCAVATE AND ASSEMBLE ALL FITTINGS PRIOR TO WATER SHUTDOWN.
4. OBTAIN CITY APPROVAL OF PREARRANGED FITTINGS.
5. **CITY** SHALL TURN OFF THE WATER; CONTRACTOR SHALL DISINFECT PIPE PER REPAIR PROCEDURES.
6. CONNECT AND INSTALL PRE-ASSEMBLED ARRANGEMENT WITH ALL JOINTS RESTRAINED.
7. POUR CONCRETE AND REACTION BLOCKS. ALLOW **FOUR HOUR** SETTING TIME BEFORE BACKFILLING.
8. CITY RESTORES WATER SERVICE AND CHECKS FOR LEAKS BEFORE BACKFILLING IS COMPLETED BY THE CONTRACTOR.
9. ALL BACKFILL MATERIAL WITHIN 10' OF A CONCRETE ANCHOR TO BE COMPACTED TO 95% THEORETICAL DENSITY AS DETERMINED BY ASTM D 698, WITH 6" MAXIMUM LIFTS.

NOT TO SCALE

REVISIONS			
NO.	DATE	DESCRIPTION	INIT.
1.	7/01/04	2004 D&CSM UPDATE	SDC
2.	01/30/09	MODIFY TEXT	SDC

WATER MAIN TIE-IN TO EXISTING CAST IRON

DWG. NO. 20

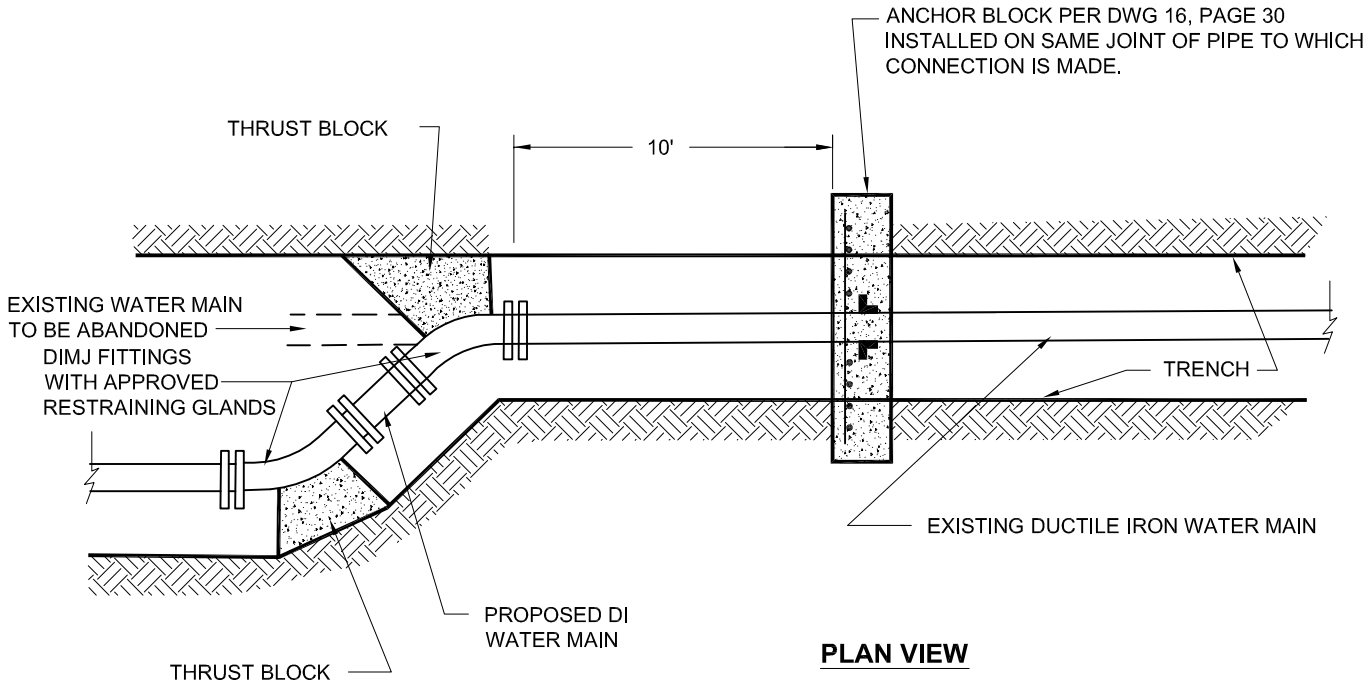

PLAN VIEW

PROCEDURE:

1. CONSTRUCT ANCHOR BLOCK AT LEAST **SEVEN (7) DAYS** PRIOR TO WATER TIE-IN. (3 DAYS USING HIGH EARLY STRENGTH CONCRETE)
2. OBTAIN CITY APPROVAL OF ANCHOR BLOCK AND SCHEDULE DATE OF TIE-IN.
3. EXCAVATE AND ASSEMBLE ALL FITTINGS PRIOR TO WATER SHUTDOWN.
4. OBTAIN CITY APPROVAL OF PREARRANGED FITTINGS.
5. **CITY** SHALL TURN OFF THE WATER; CONTRACTOR SHALL DISINFECT PIPE PER REPAIR PROCEDURES.
6. CONNECT AND INSTALL PRE-ASSEMBLED ARRANGEMENT WITH ALL JOINTS RESTRAINED.
7. POUR CONCRETE AND REACTION BLOCKS. ALLOW **FOUR HOUR** SETTING TIME BEFORE BACKFILLING.
8. CITY RESTORES WATER SERVICE AND CHECKS FOR LEAKS BEFORE BACKFILLING IS COMPLETED BY THE CONTRACTOR.
9. ALL BACKFILL MATERIAL WITHIN 10' OF A CONCRETE ANCHOR TO BE COMPACTED TO 95% THEORETICAL DENSITY AS DETERMINED BY ASTM D 698, WITH 6" MAXIMUM LIFTS.

NOT TO SCALE

REVISIONS			
NO.	DATE	DESCRIPTION	INIT.
1.	02/09/09	NEW DETAIL	SDC

WATER MAIN TIE-IN TO EXISTING DUCTILE IRON

DWG. NO. 20A

PAGE 34A

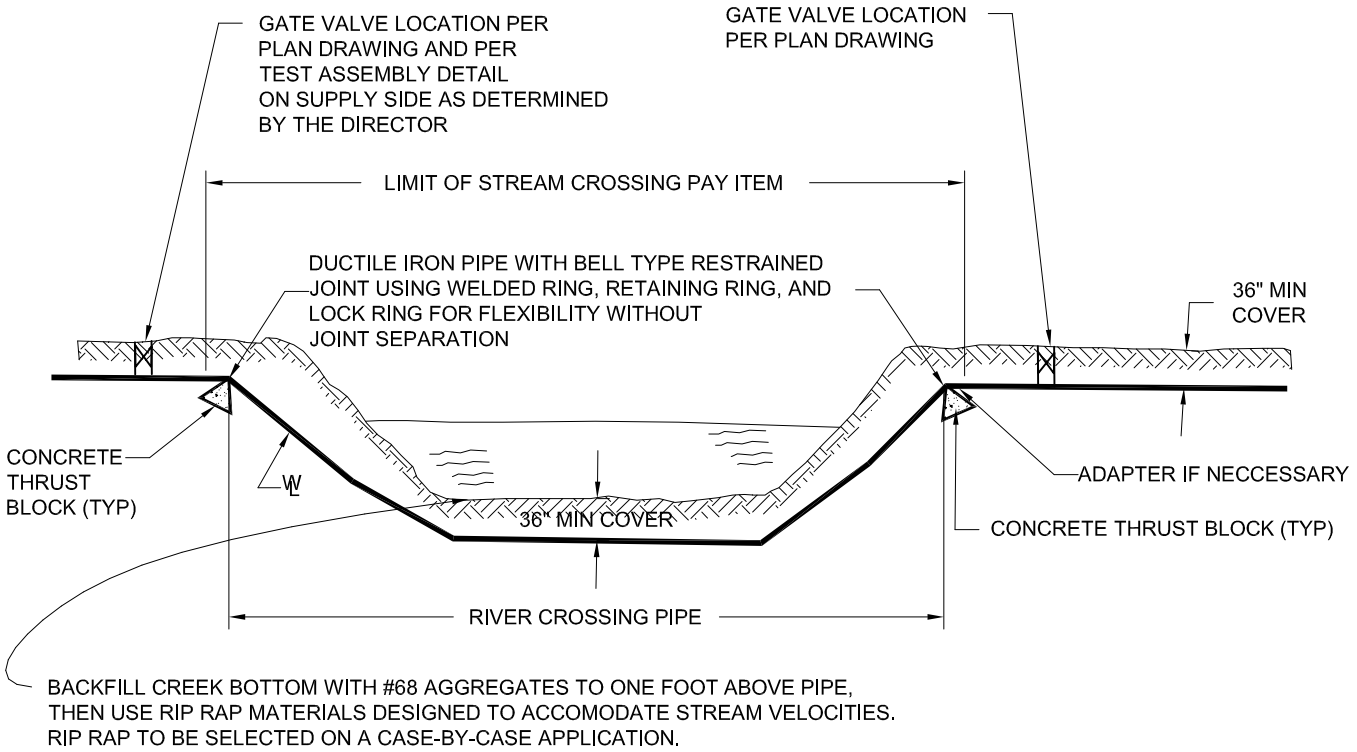

NOTES

1. ALTERNATIVE OF MECHANICAL JOINT DUCTILE IRON PIPE WITH APPROVED MECHANICAL JOINT RESTRAINING GLANDS AND / OR CONCRETE ENCASEMENT SHALL BE APPROVED ON A CASE BY CASE REVIEW BY THE DIRECTOR.

2. THIS DETAIL REFERS TO INSTALLATION OF WATER SYSTEMS ONLY.

NOT TO SCALE

REVISIONS			
NO.	DATE	DESCRIPTION	INIT.
1.	7/01/04	2004 D&CSM UPDATE	SDC

RIVER CROSSING

DWG. NO. 21

PAGE 35

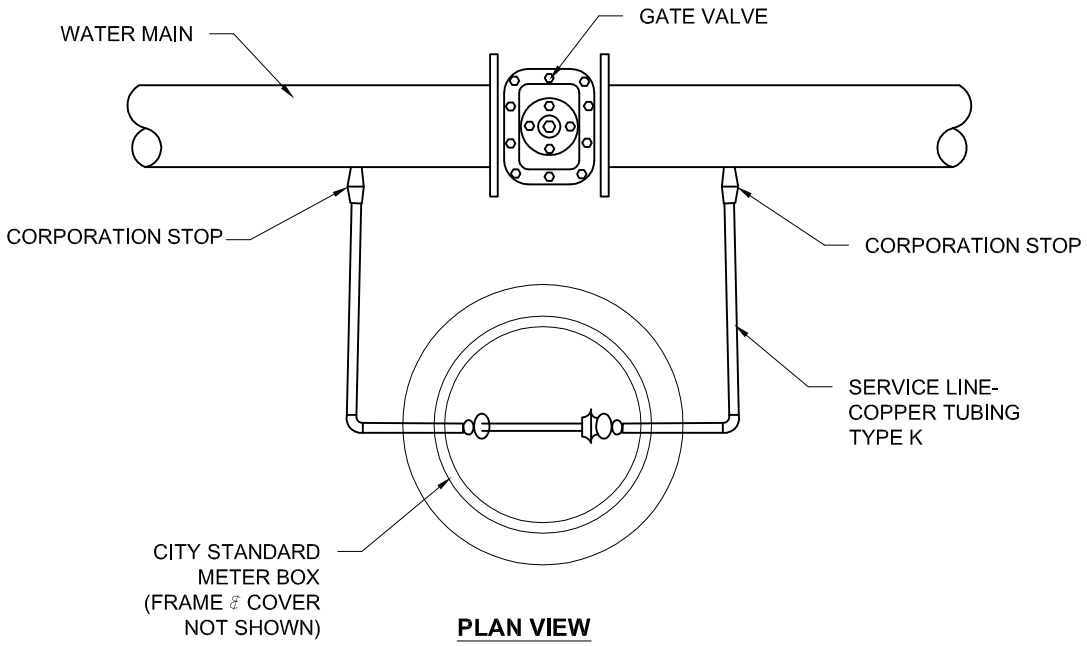

PLAN VIEW

NOTE: MINIMUM COVER OVER SERVICE LINE PER SPECIFICATIONS

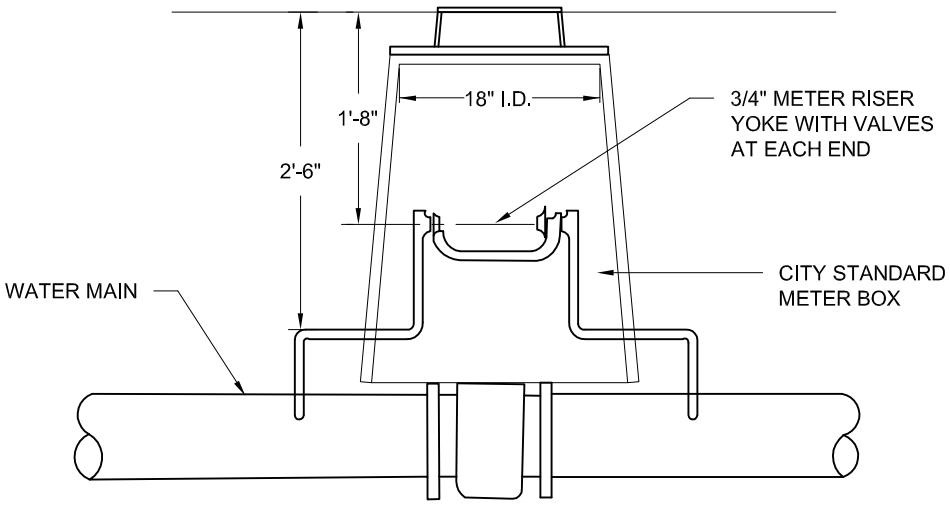

NOTE: MATERIALS SHALL CONFORM TO DETAIL SPECIFICATIONS FOR WATER SERVICE MATERIALS FOR BURIED SYSTEMS.

NOT TO SCALE

REVISIONS			
NO.	DATE	DESCRIPTION	INIT.
1.	7/01/04	2004 D&CSM UPDATE	SDC

TEST METER ASSEMBLY

DWG. NO. 22

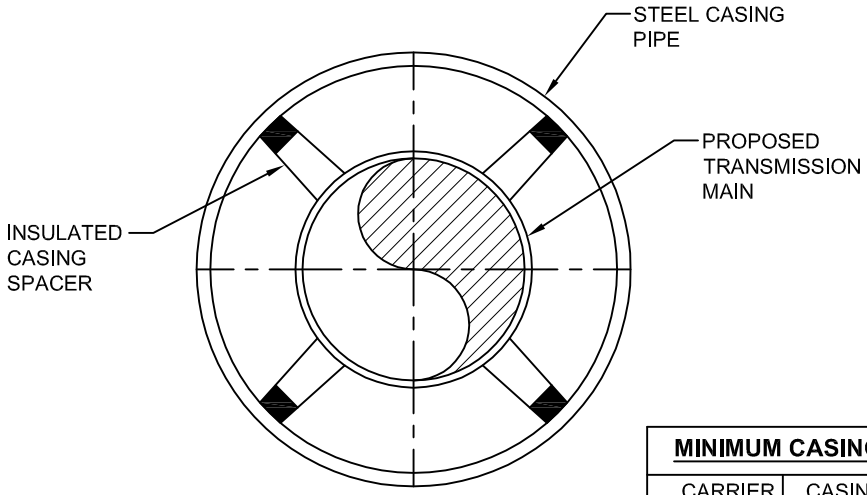

ELEVATION

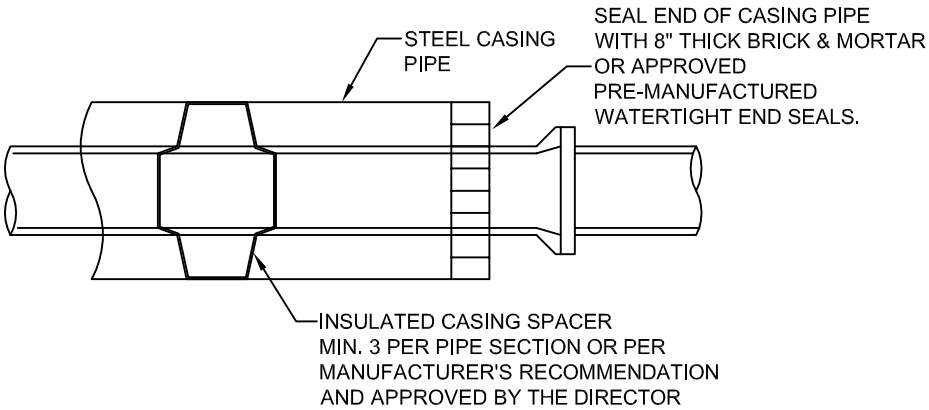

PLAN

MINIMUM CASING PIPE SIZES

CARRIER PIPE SIZE (INCHES)	CASING PIPE SIZE (INCHES)	CASING PIPE THICKNESS (INCHES)
6"	16"	3/8"
8"	20"	3/8"
10"	24"	3/8"
12"	24"	3/8"
14"	30"	3/8"
16"	30"	3/8"
18"	36"	3/8"
20"	36"	3/8"
24"	36"	3/8"

- SIZES AND THICKNESSES SHOWN ARE MINIMUMS. CASINGS 42" AND GREATER SHALL BE 1/2" THICK MINIMUM.
- FOR SIZES OTHER THAN SHOWN OR WHERE SITE CONDITIONS INDICATE A NEED FOR SPECIAL CONSIDERATIONS, DESIGNER SHALL SUBMIT SIZING CALCULATIONS INCLUDING CORROSION ALLOWANCE.

NOTES:

1. CONTRACTOR IS REQUIRED TO SUBMIT SHOP DRAWINGS FOR REVIEW AND APPROVAL PRIOR TO FABRICATION. REFER TO THE PUBLIC UTILITES PRODUCT MANUAL FOR APPROVED ITEMS.
2. CASINGS BENEATH RAILROADS SHALL CONFORM TO A.R.E.A STANDARDS. CASINGS BENEATH HIGHWAYS SHALL CONFORM TO VDOT STANDARDS.
3. THE CONTRACTOR SHALL WELD A RUNNER OF APPROPRIATE HEIGHT INTO THE BOTTOM OF THE CASING TO PREVENT THE CARRIER PIPE FROM SPINNING DURING INSTALLATION.
4. INSTALLATION OF CARRIER PIPE SHALL CONFORM TO THE MANUFACTURER'S RECOMMENDATIONS FOR THE TYPE OF JOINT EMPLOYED.
5. VENTING, DRAINING, AND/OR CATHODIC PROTECTION ON THE ENCASING CONDUIT MAY BE REQUIRED BY THE DIRECTOR ON A CASE-BY-CASE BASIS.
6. CASING DESIGNS SHALL PROVIDE A 20' CLEAR ACCESS AREA TO ALLOW PIPE REMOVAL.
7. DESIGNER TO SUBMIT STEEL CASING CALCULATIONS PER AWWA M11 UPON REQUEST

NOT TO SCALE

REVISIONS

NO.	DATE	DESCRIPTION	INIT.
1.	7/01/04	2004 D&CSM UPDATE	DHG
2.	02/22/06	ADDED NOTE 6 & 7	DHG
3.	05/15/09	ADDED BULLETS & TEXT	SDC

STANDARD CASING INSTALLATION

DWG. NO. 23

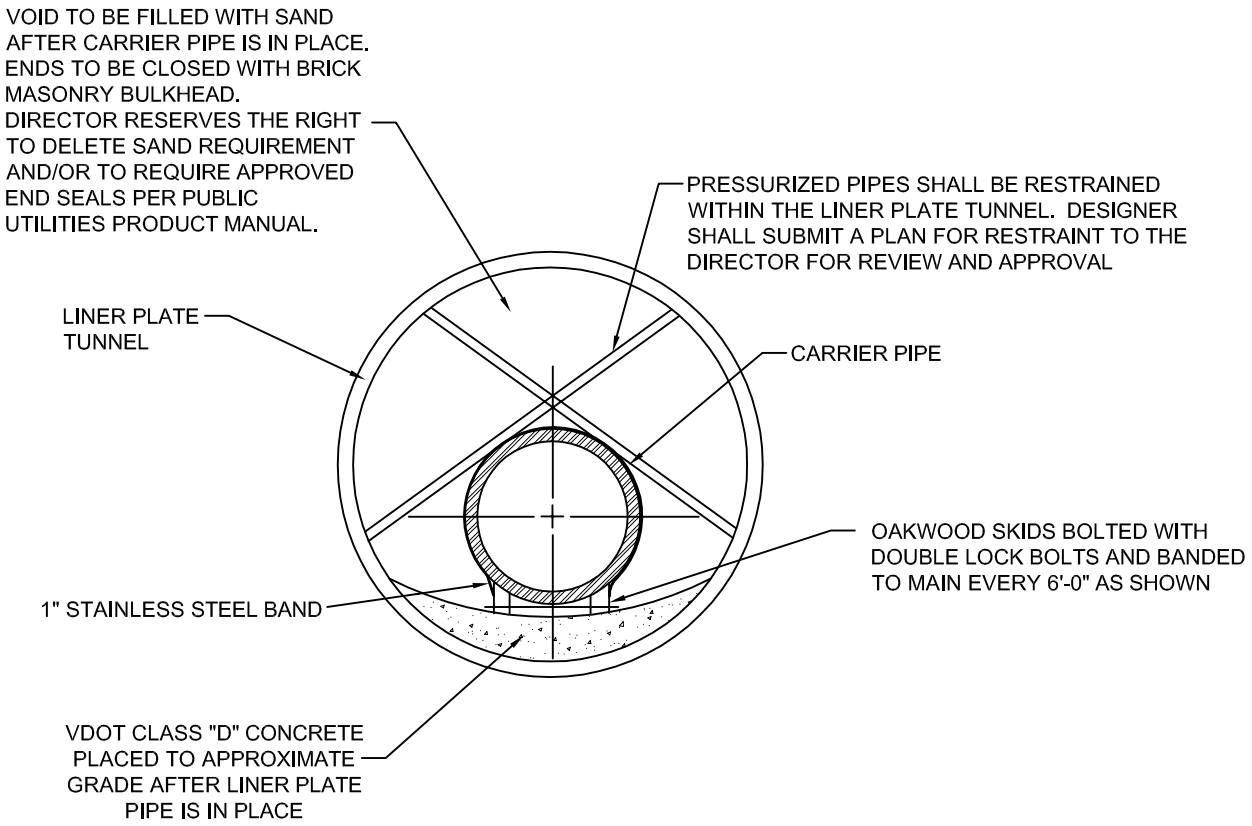

NOTE:

1. VENTING, DRAINING AND/OR CATHODIC PROTECTION OF THE ENCASING CONDUIT MAY BE REQUIRED BY THE DIRECTOR ON A CASE-BY-CASE BASIS.
2. CONTRACTOR IS REQUIRED TO SUBMIT SHOP DRAWINGS FOR REVIEW AND APPROVAL PRIOR TO FABRICATION.
3. TUNNEL DESIGNS SHALL PROVIDE A 20' CLEAR ACCESS AREA TO ALLOW PIPE REMOVAL.
4. TUNNEL LINE PLATE REQUIRES INDIVIDUAL CASE DESIGN AND SUBMITTAL BY A LICENSED STRUCTURAL ENGINEER.

NOT TO SCALE

REVISIONS

NO.	DATE	DESCRIPTION	INIT.
1.	7/01/04	2004 D&CSM UPDATE	DHG
2.	02/22/06	ADDED NOTE 3 & 4	DHG
3.	01/29/09	CORRECTED MISSPELLING	SDC

LINER PLATE TUNNEL

DWG. NO. 24

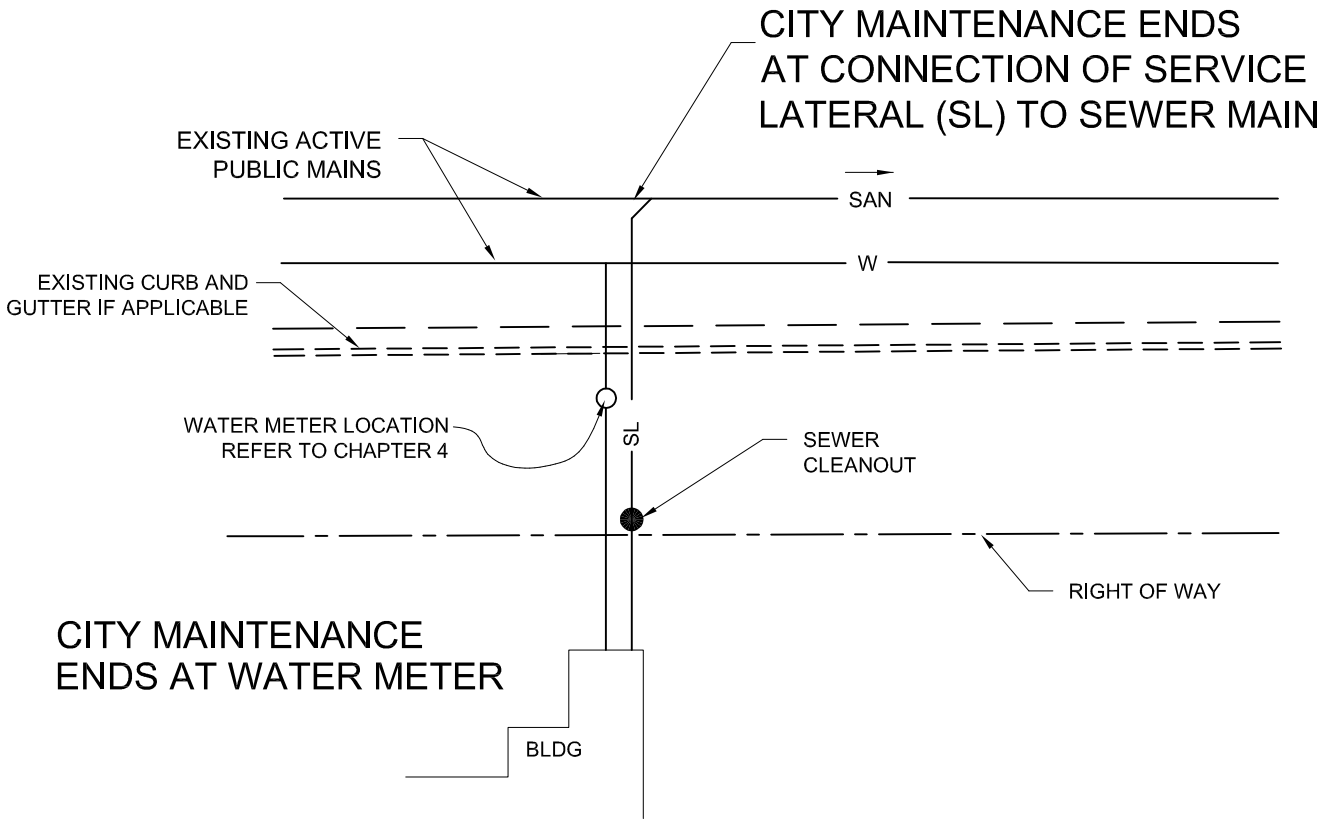

UTILITY SERVICES INSTALLATION NOTES

A. THE CITY OF HARRISONBURG SHALL CONSTRUCT WATER SERVICE LINES FROM **ACTIVE** PUBLIC OWNED MAINS TO THE ESTABLISHED LOCATION OF CITY MAINTENANCE. EXCEPTION TO CONSTRUCTION BY CITY FORCES SHALL BE MADE ONLY UPON APPROVAL OF THE DIRECTOR.

B. THE CITY OF HARRISONBURG SHALL CONSTRUCT SEWER LATERAL CONNECTIONS FROM THE ACTIVE MAIN TO THE RIGHT OF WAY. EXCEPTION TO THE CONSTRUCTION BY CITY FORCES SHALL BE MADE ONLY UPON APPROVAL OF THE DIRECTOR.

RULE EXCEPTION TO A AND B

SEE CITY STANDARDS APPLICABLE WHEN CONSTRUCTING **NEW** WATER AND SEWER MAINS. MATERIALS SPECIFICATIONS ARE PROVIDED IN THE PUBLIC UTILITIES PRODUCTS MANUAL. CONSTRUCTION AND INSTALLATION SPECIFICATIONS ARE PROVIDED IN THIS CHAPTER, PART 1.

C. WATER AND SEWER FEES FOR WORK COMPLETED BY THE CITY OF HARRISONBURG WILL BE AS ESTABLISHED IN THE **HARRISONBURG CITY CODE OF ORDINANCES**, LATEST EDITION, TITLE 7, CHAPTER 4. SCHEDULING OF WORK BY CITY FORCES SHALL BE MADE UPON PAYMENT OF FEES.

NOT TO SCALE

REVISIONS

NO.	DATE	DESCRIPTION	INIT.
1.	7/01/04	2004 D&CSM UPDATE	SDC
2.	02/22/06	P.U. MODIFICATIONS	DHG

TYPICAL WATER METER SETTING IN PUBLIC R.O.W.

DWG. NO. 25

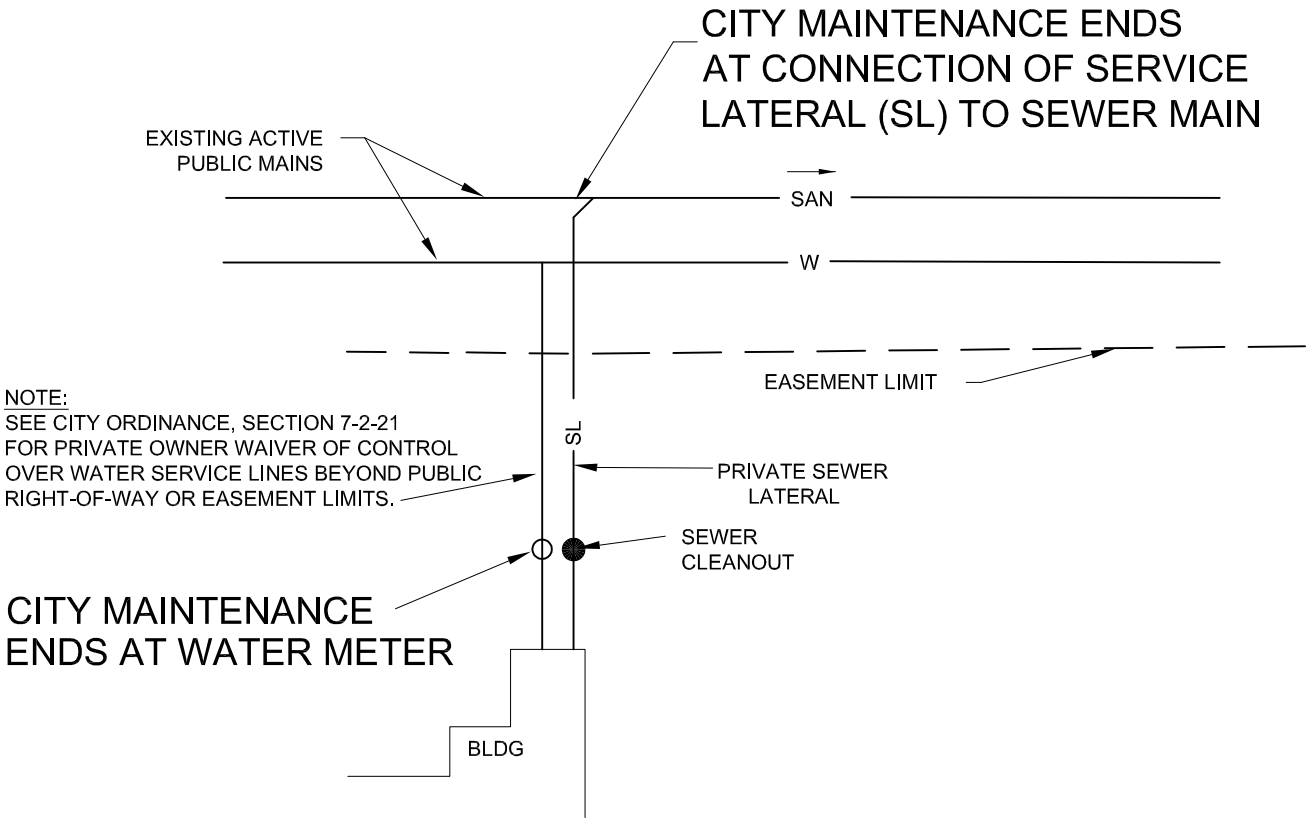

UTILITY SERVICES INSTALLATION NOTES

A. THE CITY OF HARRISONBURG SHALL CONSTRUCT WATER SERVICE LINES FROM **ACTIVE** PUBLIC OWNED MAINS TO THE ESTABLISHED LOCATION OF CITY MAINTENANCE. EXCEPTION TO CONSTRUCTION BY CITY FORCES SHALL BE MADE ONLY UPON APPROVAL OF THE DIRECTOR.

B. THE CITY OF HARRISONBURG SHALL CONSTRUCT SEWER LATERAL CONNECTIONS FROM THE ACTIVE MAIN TO THE RIGHT OF WAY. EXCEPTION TO THE CONSTRUCTION BY CITY FORCES SHALL BE MADE ONLY UPON APPROVAL OF THE DIRECTOR.

RULE EXCEPTION TO A AND B

SEE CITY STANDARDS APPLICABLE WHEN CONSTRUCTING **NEW** WATER AND SEWER MAINS. MATERIALS SPECIFICATIONS ARE PROVIDED IN THE PUBLIC UTILITIES PRODUCT MANUAL. CONSTRUCTION AND INSTALLATION SPECIFICATIONS ARE PROVIDED IN THIS CHAPTER, PART 1.

C. WATER AND SEWER FEES FOR WORK COMPLETED BY THE CITY OF HARRISONBURG WILL BE AS ESTABLISHED IN THE **HARRISONBURG CITY CODE OF ORDINANCES,** LATEST EDITION, TITLE 7, CHAPTER 4. SCHEDULING OF WORK BY CITY FORCES SHALL BE MADE UPON PAYMENT OF FEES.

NOT TO SCALE

REVISIONS

NO.	DATE	DESCRIPTION	INIT.
1.	7/01/04	2004 D&CSM UPDATE	SDC
2.	11/29/04	2004 D&CSM UPDATE	ELR
3.	02/22/05	P.U. UPDATE TO CODE	DHG

TYPICAL WATER METER SETTING BEYOND PUBLIC R-O-W OR EASMENT LIMITS

DWG. NO. 26

PAGE 40

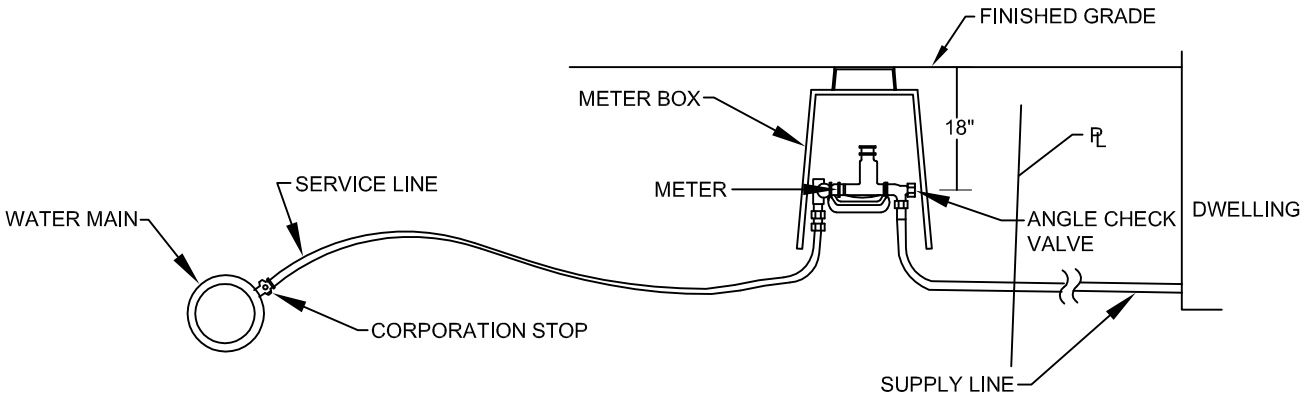

WATER METER ARRANGEMENTS

SERVICE LINE	WATER METER		SUPPLY LINE
3/4"	5/8" X 3/4"	3/4"	SEE NOTE 3 BELOW
1"	2 - 5/8" X 3/4"	2 - 3/4"	SEE NOTE 3 BELOW
1" (SEE NOTE 1)	5/8" X 3/4"	1"	SEE NOTE 3 BELOW
1"	1"	1"	SEE NOTE 3 BELOW
2"	1 1/2"		SEE NOTE 3 BELOW
2"	2"		SEE NOTE 3 BELOW
3"	3"		SEE NOTE 3 BELOW
4"	4"		SEE NOTE 3 BELOW
6"	6"		SEE NOTE 3 BELOW
8"	8"		SEE NOTE 3 BELOW

NOTES:

1. INCREASED SERVICE LINE SIZE MAY BE REQUIRED FOR RESIDENTIAL CUSTOMERS IN AREAS WHERE STATIC PRESSURE IS LOW.
2. WATER METER SIZE SHALL BE DETERMINED BASED ON FLOWRATE AS DETERMINED BY I.C.C OR AWWA APPROVED METHODS USING FIXTURE COUNT PROJECTIONS OR KNOWN DEMAND RATES.
3. CUSTOMERS SUPPLY LINE SHALL BE SIZED TO ADDRESS FRICTION LOSSES AND AVAILABLE PRESSURE.
4. MATERIAL SPECIFICATIONS PROVIDED IN THE PUBLIC UTILITIES PRODUCT MANUAL. CONSTRUCTION AND INSTALLATION SPECIFICATIONS PROVIDED IN THIS CHAPTER, PART 1.
5. SERVICES SHALL BE BACKFILLED WITH GOOD CLAY DIRT. STONE AGGREGATE MATERIALS AND BLASTED ROCK FRAGMENTS ARE NOT PERMITTED.

NOT TO SCALE

NO.	DATE	DESCRIPTION	INIT.
1.	7/01/04	2004 D&CSM UPDATE	DHG
2.	4/07/08	2005 D&CSM UPDATE	ELR

WATER SERVICE AND METER ARRANGEMENTS

DWG. NO 27

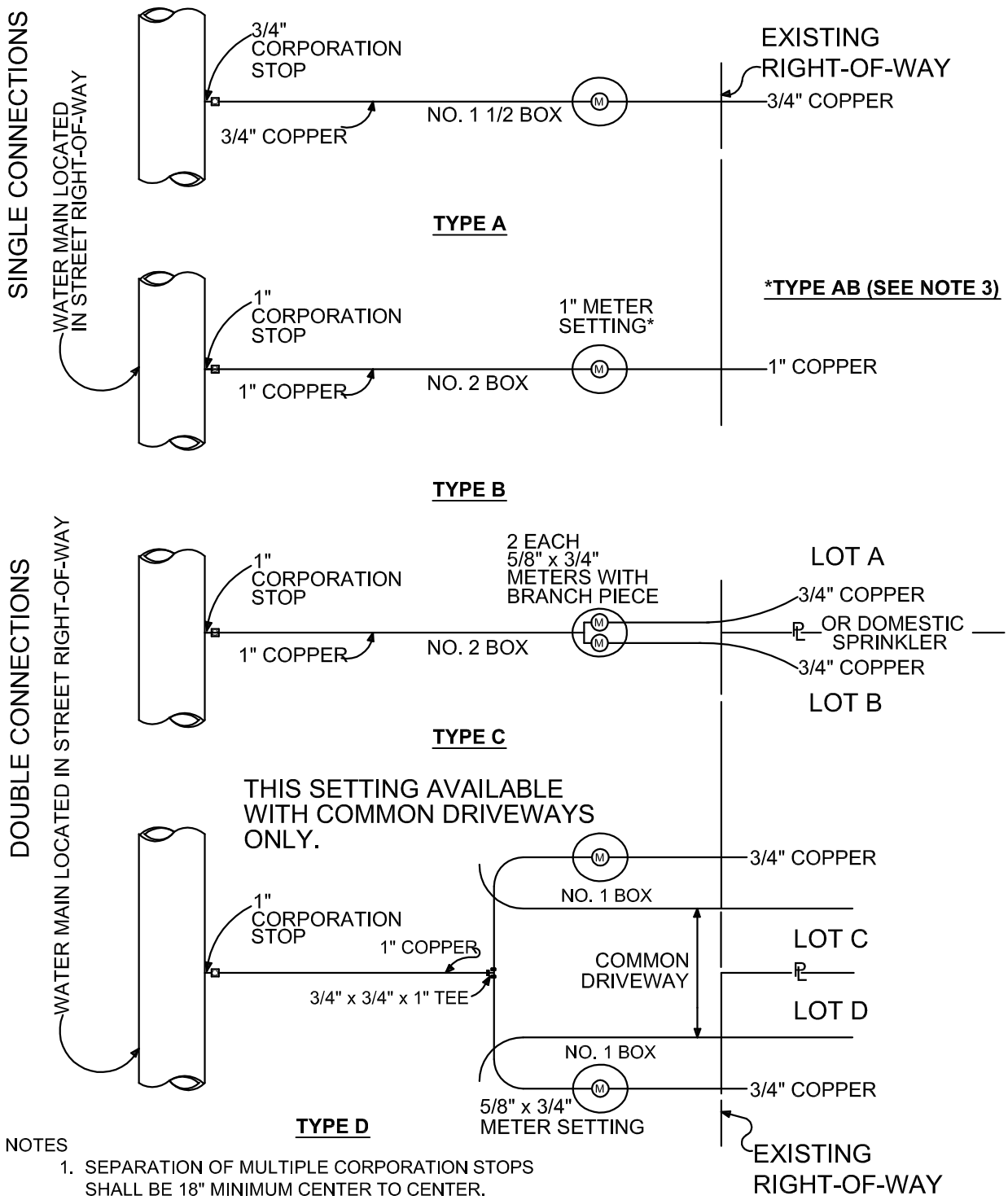

NOTES

1. SEPARATION OF MULTIPLE CORPORATION STOPS SHALL BE 18" MINIMUM CENTER TO CENTER.
2. SEPARATION OF MULTIPLE BOXES SHALL BE 3'-0" MINIMUM CENTER TO CENTER.
3. TO ADAPT 5/8" x 3/4" METER TO 1" YOKE SPECIFY **TYPE AB**

NOT TO SCALE

NO.		DESCRIPTION	INIT.
1.	7/01/04	2004 D&CSM UPDATE	SDC

5/8" x 3/4" AND 1" WATER SERVICE LAYOUTS

DWG. NO. 28

PAGE 42

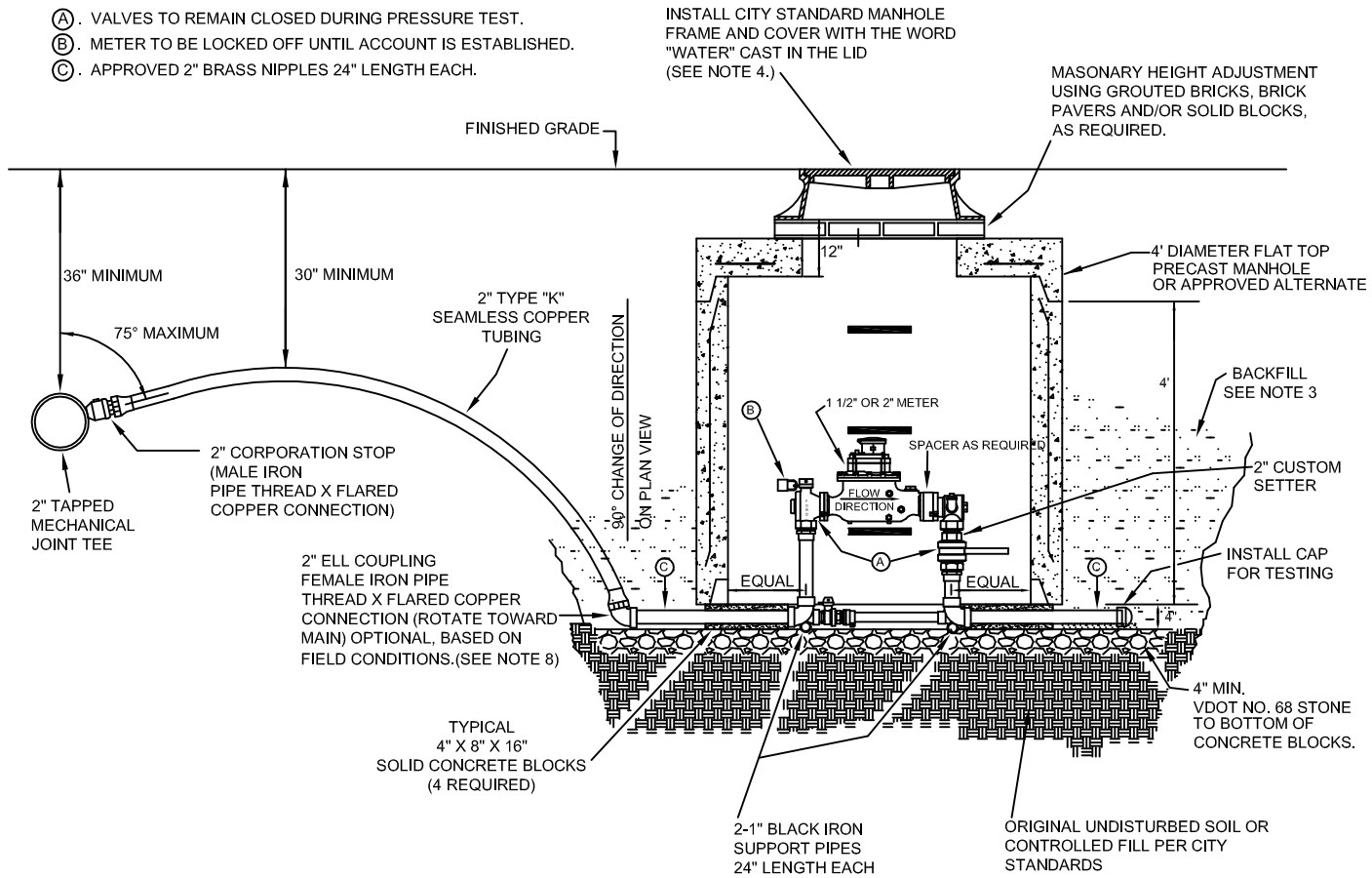

NOTES

1. ALL MATERIALS MUST BE APPROVED (SEE PUBLIC UTILITIES PRODUCT MANUAL)
2. FILLING, TESTING, & FLUSHING
   A. SERVICES SHALL BE PRESSURE TESTED FROM THE MAIN TO THE 2" TEST CAP, INCLUDING THE CUSTOM SETTER, IN ACCORDANCE WITH CITY STANDARDS, SIMULTANEOUSLY WITH THE MAIN.
   B. CUSTOM SETTER ANGLE VALVE AND 2" BALL VALVE SHALL REMAIN CLOSED DURING FILLING AND TESTING PROCEDURE. HIGHLY CHLORINATED TEST WATER SHALL NOT ENTER THE METER.
   C. UPON FLUSHING BY INSPECTOR, WATER SHALL BE INTRODUCED INTO THE METER THROUGH THE 2" BALL VALVE, FOR VISUAL INSPECTION FOR LEAKS UNDER WORKING PRESSURE.
   D. TEST PRESSURE SHALL BE PER CITY STANDARD, EXCEPT THAT IT MUST NOT EXCEED 150 PSI.
3. BACKFILL
   COPPER SERVICE LINES SHALL BE BACKFILLED TO A DEPTH OF 12" ABOVE THE PIPE WITH GOOD CLAY DIRT MEETING CITY STANDARD SPECIFICATION FOR SELECT LOCAL MATERIAL CHAPTER 7, DRAWING 1. (LAYING CONDITIONS 6 & 7 ARE APPLICABLE.)
   STONE AGGREGATE MATERIALS AND BLASTED ROCK FRAGMENTS ARE NOT PERMITTED.
4. FRAME & COVER INSTALLATION
   A. FLUSH TO MINUS 1/4 INCH WITH FINAL ASPHAULT PAVEMENT SURFACE
   B. FLUSH WITH CONCRETE SURFACES
   C. 2" ABOVE FINISHED GRADE PRIOR TO SODDING
   D. 1" AVOVE FINISHED GRADE PRIOR TO SEEDING
5. ADDITIONAL BRASS FLARE FITTINGS, IF REQUIRED DUE TO FIELD CONDITIONS, MUST BE APPROVED BY THE CITY UTILITY INSPECTOR.
6. COMPRESSION TYPE FITTINGS ARE NOT ALLOWED.
7. MANHOLE STRUCTURE TO BE LOAD RATED FOR HS-20 LIVE LOAD UNLESS OTHERWISE APPROVED BY THE DIRECTOR, CITY STANDARD VALVE BOX & STATIONARY ROD EXTENDING TO 8" MAX. BELOW TOP OF VALVE BOX
8. PARTIAL SERVICE BY CONTRACTOR TO TERMINATE WITH 2" BALL VALVE, CITY STANDARD VALVE BOX & STATIONARY ROD EXTENDING TO 8" MAX. BELOW TOP OF VALVE BOX, WHERE 2" ELL COUPLING IS SHOWN.

NOT TO SCALE

REVISIONS

NO.	DATE	DESCRIPTION	INIT.
1.	9/21/04	2004 D&CSM UPDATE	SDC

2" WATER SERVICE FOR 1 1/2" AND 2" METERS

DWG. NO. 29

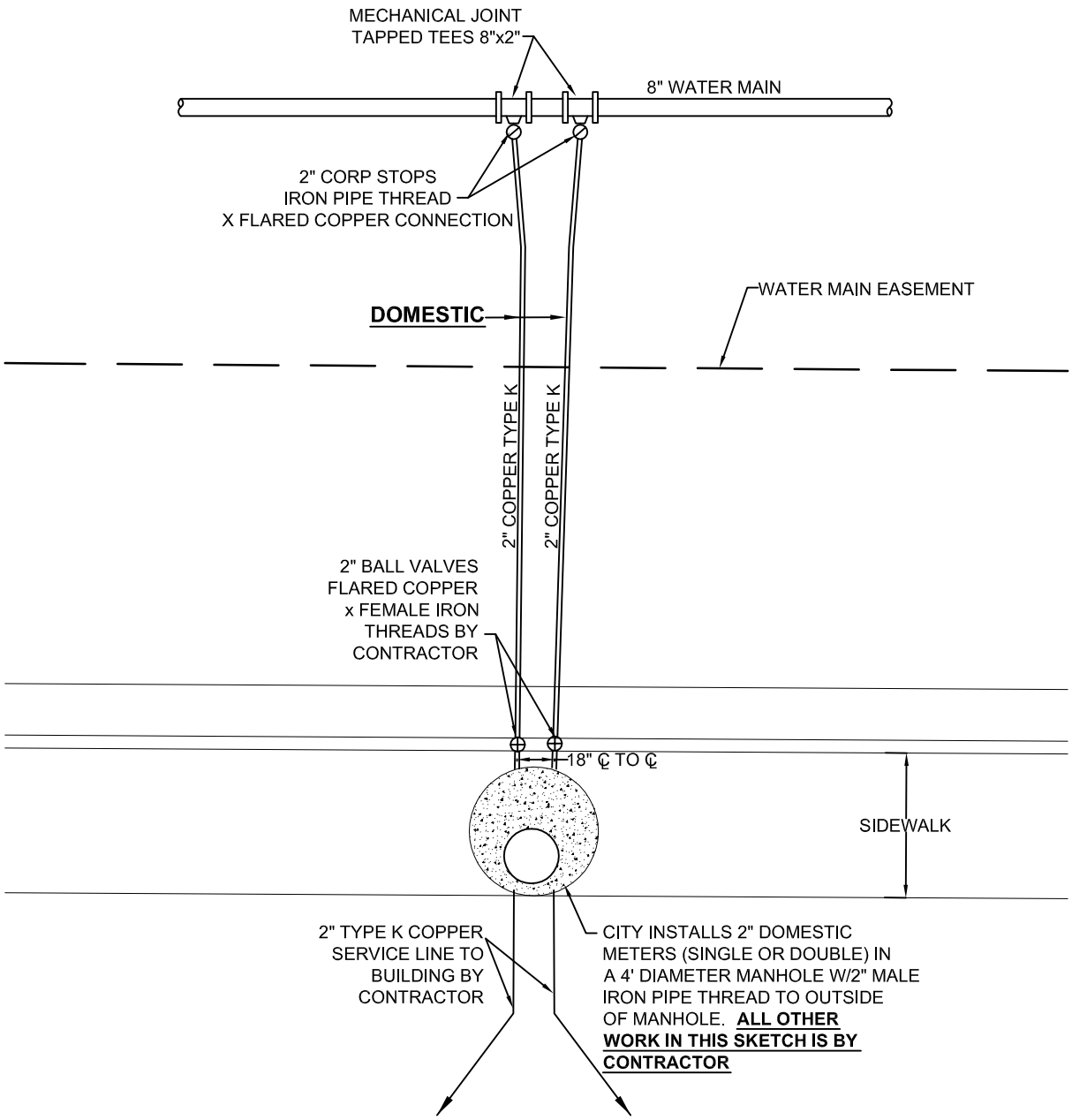

NOT TO SCALE

REVISIONS			
NO.	DATE	DESCRIPTION	INIT.
1.	7/01/04	2004 D&CSM UPDATE	ELR
2.	02/22/06	P.U. UPDATE TO CODE	DHG
3.	05/15/09	MODIFY TEXT & DELETE	SDC
		NOTE	

TYPICAL DUAL WATER SERVICE LAYOUT

DWG. NO. 29A

PAGE 43A

MINIMUM INSIDE BOX DIMENSIONS SENSUS SRH COMPOUND METER PRE-FAB PAK ONLY

METER SIZE	A	B	C	D
+ 2"	72"	48"	24"	24"
3"	96"	48"	24"	24"
4"	120"	54"	27"	27"
6"	126"	62"	24"	38"
* 8"	120"	96"	48"	48"
* 10"	126"	96"	48"	48"

\+ 6' DIAMETER FLATTOP MANHOLE WITH NO BOTTOM MAY BE SUBSTITUTED

* COMPACT FIRELINE METERS (SEE BELOW)

NOTES (APPLICABLE TO BOTH PLANS):

1. BLOCK OUT BOTTOMS LEAVING 6" FLANGE FOR BEARING.
2. FRAME AND COVER TO BE APPROVED ON A CASE-BY-CASE BASIS
3. ALL METERS MUST BE INSTALLED LEVEL
4. ALL STRUCTURES TO BE RATED FOR HS-20 LIVE LOAD.
5. SWING CHECK VALVES TO MEET OR EXCEED REQUIREMENTS OF ANSI/AWWA C508 (LATEST EDITION)
6. ALL MATERIALS TO BE APPROVED (SEE PUBLIC UTILITIES PRODUCT MANUAL)
7. DO NOT INSTALL ELBOWS, BENDS, NONCONCENTRIC REDUCERS, CHECK VALVES AND/OR PRESSURE DEVICES WITHIN TEN (10) PIPE DIAMETERS UPSTREAM OR FIVE (5) PIPE DIAMETERS DOWNSTREAM OF THE COMPOUND METER.

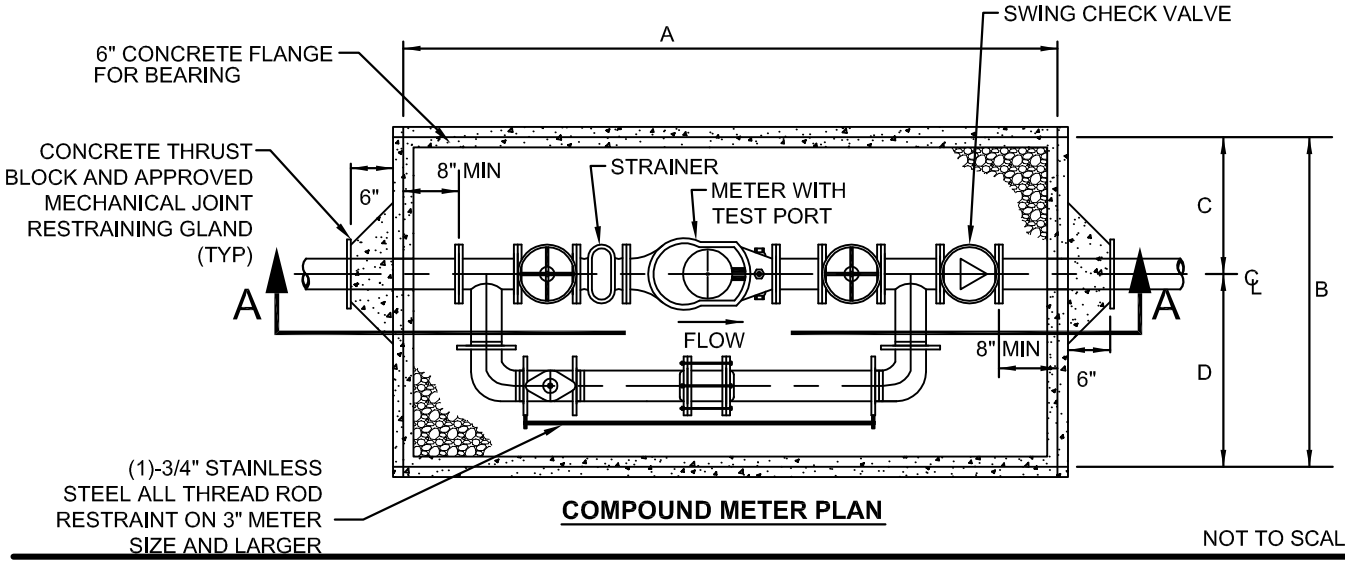

COMPOUND METER PLAN

NOT TO SCALE

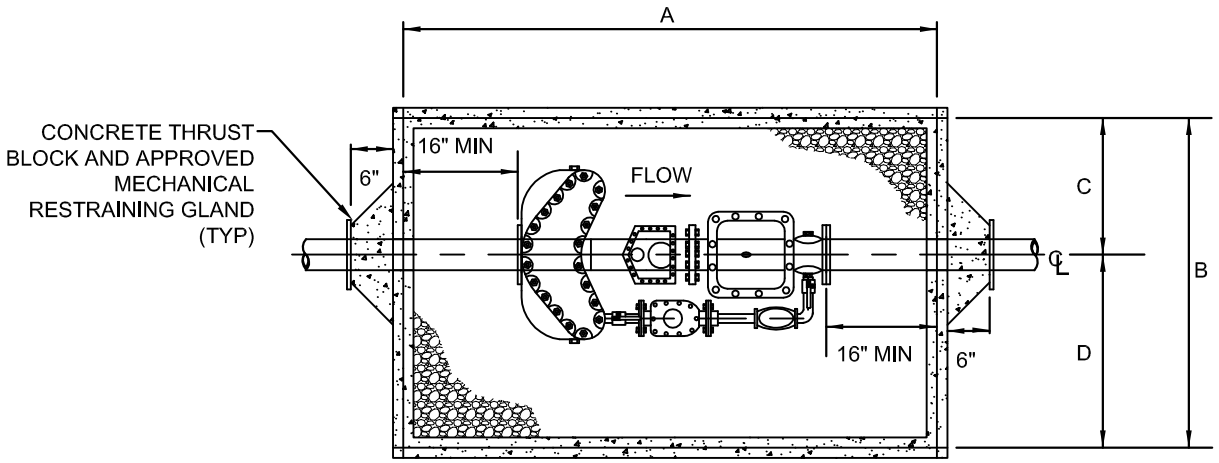

8" & 10" COMPACT FIRELINE METER PLAN

NOT TO SCALE

REVISIONS			
NO.	DATE	DESCRIPTION	INIT.
1.	7/01/04	2004 D&CSM UPDATE	DHG

COMPOUND AND FIRELINE METERS
WATER SERVICE CONNECTION

DWG. NO. 30

PAGE 44

MINIMUM HEIGHT DIMENSIONS SENSUS SRH COMPOUND METER PRE-FAB PAK ONLY

METER SIZE	A	B
2"	68"	30"
3"	68"	30"
4"	68"	30"
6"	72"	30"
* 8"	72"	30"
* 10"	72"	30"

* COMPACT FIRELINE METERS
** "B" DIMENSION IS MEASURED FROM THE TOP SURFACE OF THE 6" FLANGE LEFT AS DESCRIBED ON DRWG. 30, PAGE 44

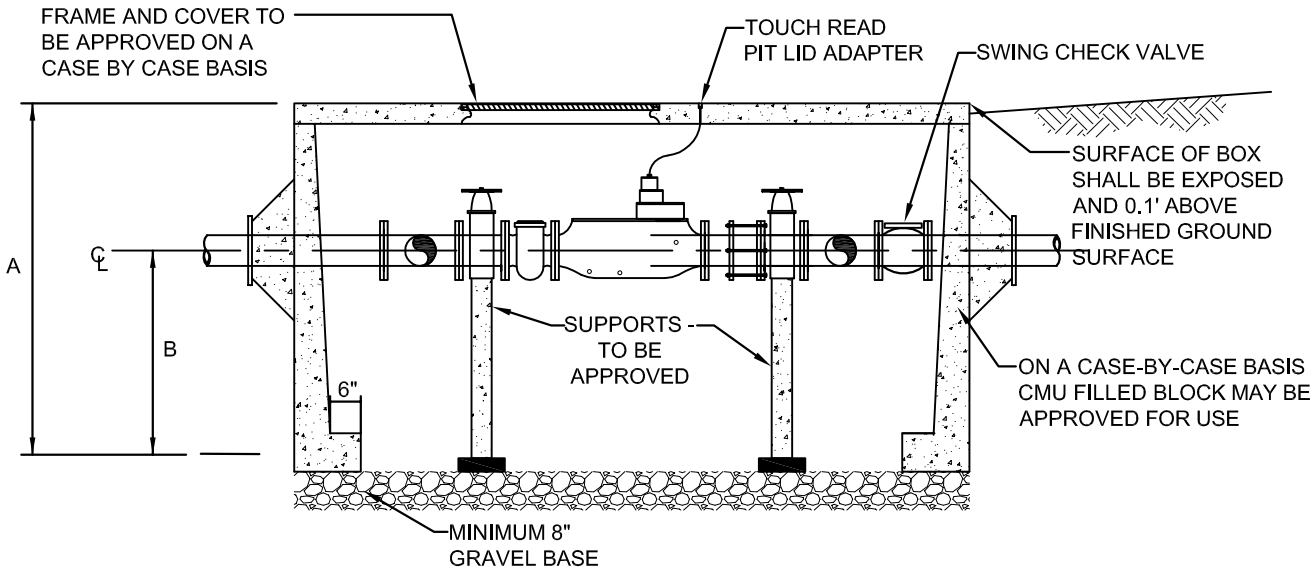

SECTION A-A
(COMPOUND SHOWN)

NOTE:
ALL NOTES ON STANDARD DRAWING 30 ARE APPLICABLE

NOT TO SCALE

REVISIONS			
NO.	DATE	DESCRIPTION	INIT.
1.	7/01/04	2004 D&CSM UPDATE	DHG
2.	05/15/09	MODIFY TEXT&ADD HATCH	SDC

COMPOUND METER WATER SERVICE CONNECTION

DWG. NO. 30A

PAGE 44A

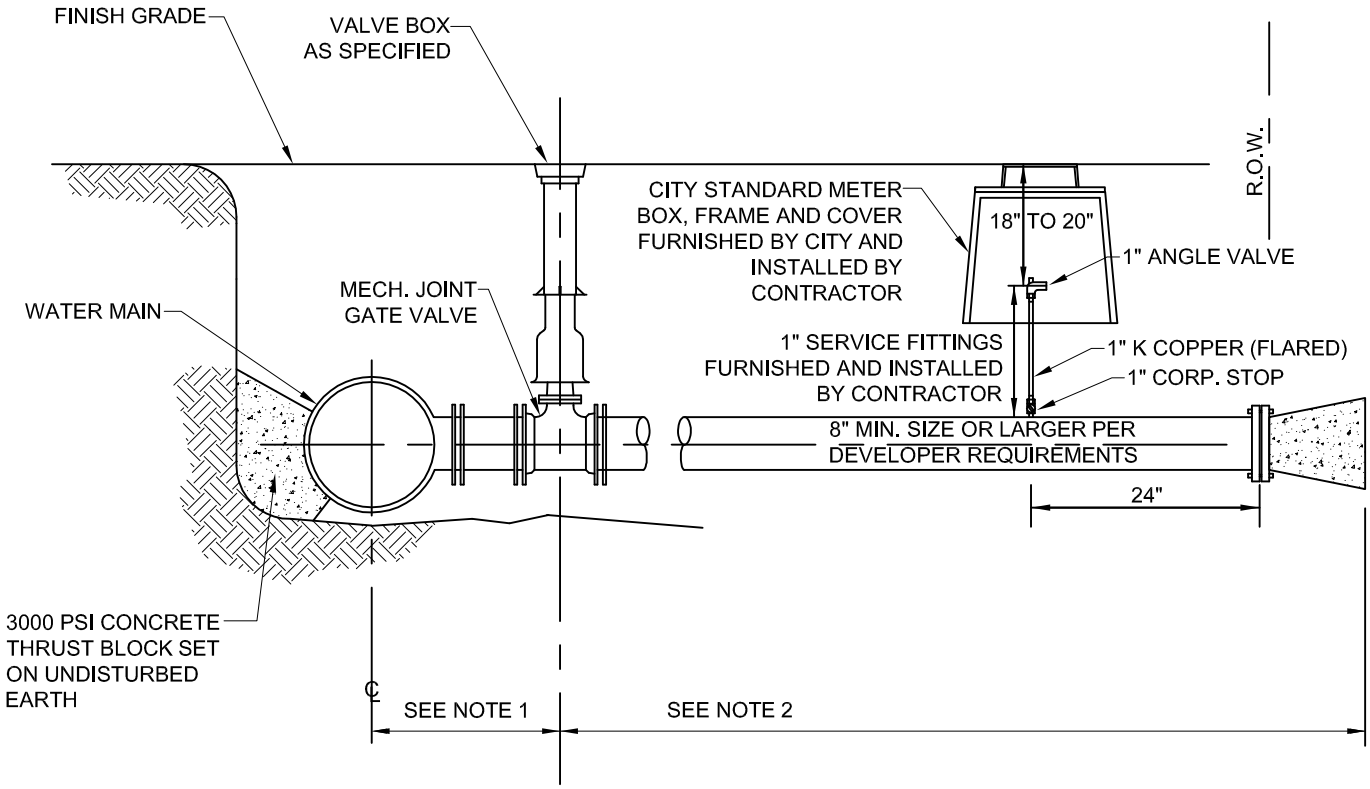

NOTES:

1. VALVE MUST BE ANCHORED TO THE MAIN TEE BY ONE OF THE FOLLOWING METHODS

   A. USE OF APPROVED SWIVEL TEE (WITH LOCKING SWIVEL FLANGE)
   B. USE OF APPROVED MECHANICAL JOINT RESTRAINING GLANDS ON EACH JOINT
   C. RODDING OR OTHER SPECIAL RESTRAINT DEVICE ONLY WHERE SPECIFICALLY APROVED BY DIRECTOR OF PUBLIC UTILITIES

2. WHERE REQUIRED BEARING SUPPORT FOR DEAD END THRUST BLOCK CANNOT BE OBTAINED, JOINTS FROM VALVE TO DEAD END SHALL BE RESTRAINED ACCORDING TO NOTE 1B.

3. THIS TYPE OF CONNECTION REQUIRED BY DEVELOPERS WHEN INSTALLING MAINS IN BLOCK AREAS OF UNDIVIDED BUSINESS AND COMMERCIAL AREAS.

4. SERVICE TO BE PRESSURE TESTED WITH THE MAIN.

NOT TO SCALE

NO.	DATE	DESCRIPTION	INIT.
1.	7/01/04	2004 D&CSM UPDATE	DHG

COMMERCIAL WATER LATERAL

DWG. NO 31

PAGE 45

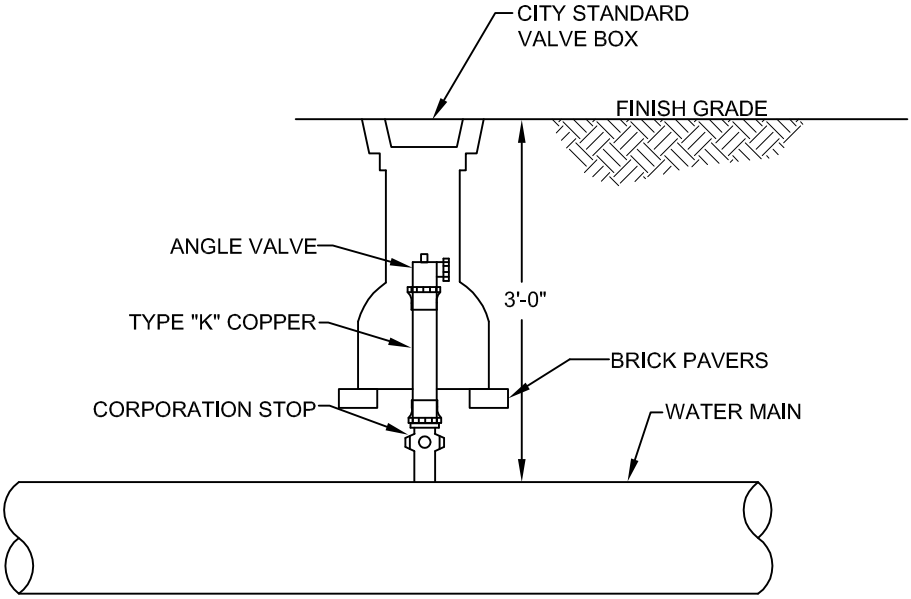

NOTE:

1. THIS ARRANGEMENT IS NOT TO BE SUBSTITUTED FOR COMBINATION AIR/VACUUM RELEASE VALVE EXCEPT WITH WRITTEN APPROVAL OF THE DIRECTOR OF WATER AND SEWER.

2. ALL COPPER JOINTS SHALL BE FLARED

NOT TO SCALE

NO.	DATE	DESCRIPTION	INIT.
1.	7/01/04	2004 D&CSM UPDATE	DHG

MANUAL
AIR RELEASE
VALVE

DWG. NO
32

PAGE
46

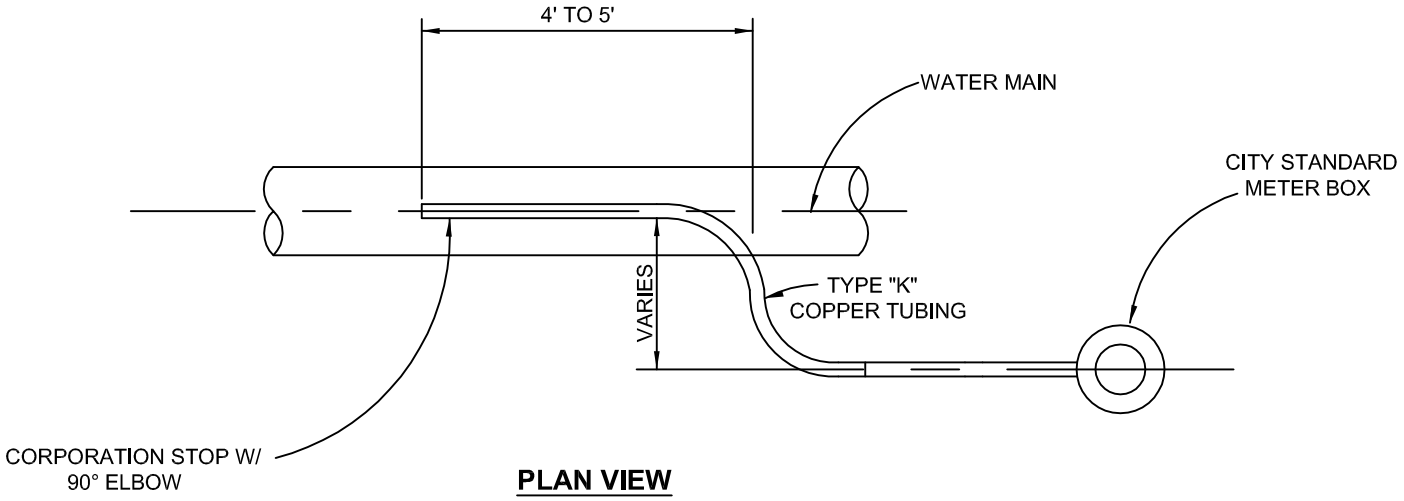

PLAN VIEW

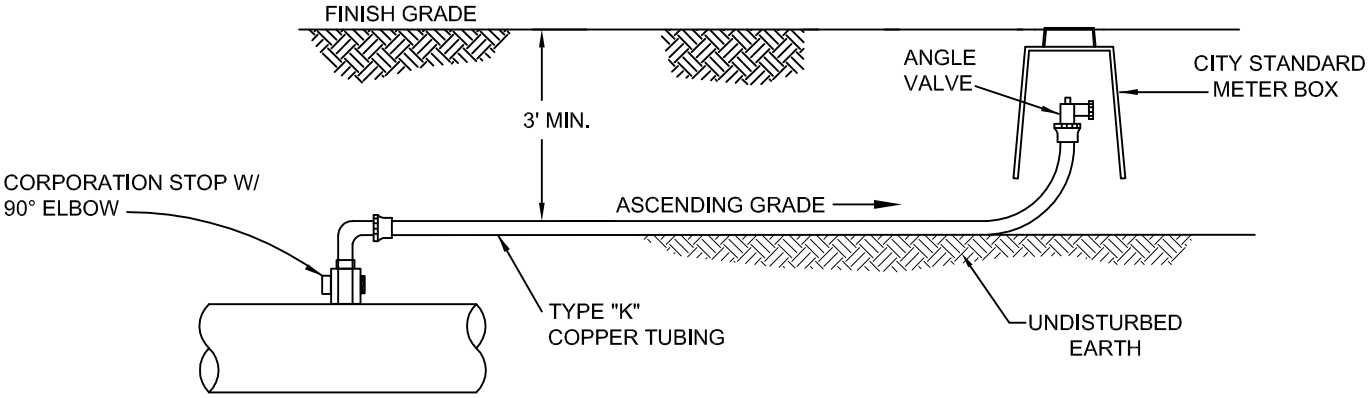

ELEVATION VIEW

NOTES:

1. EASEMENT MUST BE EXPANDED TO PROVIDE 5' OF CLEARANCE FROM AIR RELEASE.
2. THIS ARRANGEMENT IS NOT TO BE SUBSTITUTED FOR COMBINATION AIR/VACUUM RELEASE VALVE EXCEPT WITH WRITTEN APPROVAL OF THE DIRECTOR OF WATER AND SEWER.
3. ALL COPPER JOINTS SHALL BE FLARED.
4. SERVICES SHALL BE BACKFILLED WITH GOOD CLAY DIRT. STONE AGGREGATE MATERIALS AND BLASTED ROCK FRAGMENTS ARE NOT PERMITTED.

NOT TO SCALE

NO.	DATE	DESCRIPTION	INIT.
1.	7/01/04	2004 D&CSM UPDATE	DHG

MANUAL
AIR RELEASE VALVE
OFFSET

DWG. NO
33

PAGE
47

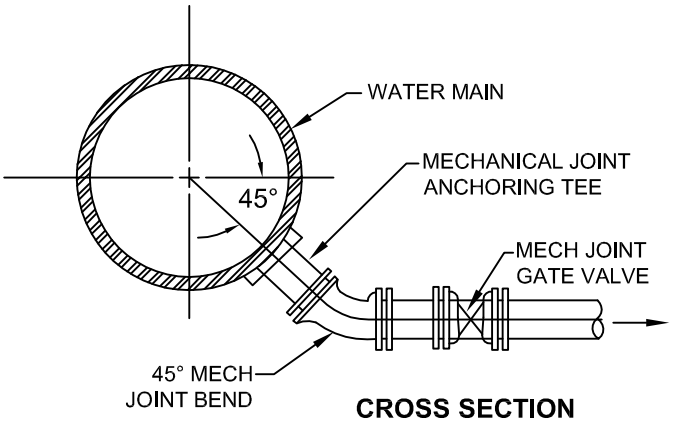

CROSS SECTION ELEVATION VIEW

BLOW-OFF SIZES	
MAINLINE	BLOW-OFF
UP TO 12"	6"
12"-30"	8"
> 30"	*

* - CASE-BY-CASE DESIGN

NOTE:

1. RESTRAIN ALL JOINTS FROM MAIN TO TERMINATION WITH APPROVED MECHANICAL JOINT RESTRAINING GLANDS.
2. ALL BLOW-OFFS SHALL BE PLACED IN A POSITION TO ASSURE NATURAL DRAINAGE AND PROVIDE MOST EFFECTIVE DEWATERING OF WATERMAIN. (EXACT LOCATION TO FIELD VERIFIED)
3. SPECIFY BLOW-OFF SIZE ON THE PLANS.

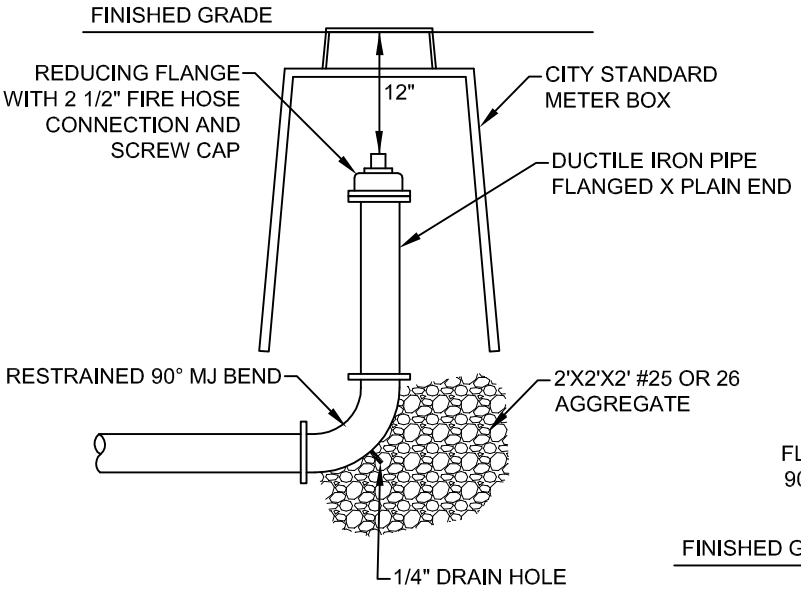

STANDARD BLOW-OFF RISER

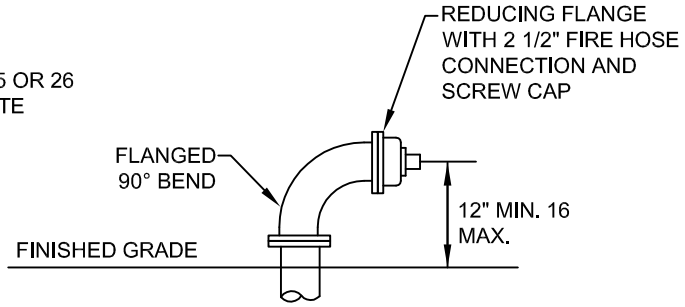

ALTERNATE RISER TERMINATION

NOT TO SCALE

REVISIONS			
NO.	DATE	DESCRIPTION	INIT.
1.	7/01/04	2004 D&CSM UPDATE	DHG

WATER MAIN BLOW-OFF CONNECTION

DWG. NO 34

PAGE 48

1. MANHOLE TO MEET CURRENT REQUIREMENTS OF ASTM C-478.
2. ALL REINFORCING TO MEET CURRENT REQUIREMENTS OF ASTM A-615.
3. CONCRETE TO BE CLASS A-4.
4. JOINT TO MEET CURRENT REQUIREMENTS OF ASTM C-443.
5. PIONEER 301 MASTIC OR APPROVED EQUAL SHALL BE USED IN ADDITON TO THE JOINT SPECIFIED.
6. INVERT SHAPING TO CONFORM TO CITY STANDARD DETAIL.
7. FLEXIBLE JOINTS, MEETING CURRENT REQUIREMENTS OF ASTM C-923, ARE REQUIRED ON ALL PIPE CONNECTIONS TO MANHOLES. WHERE FIELD CONDITIONS WILL NOT PERMIT THE USE OF A SLEEVE, A MAXIMUM 24" STUB MAY BE USED.
8. JOINT CONFIGURATION MAY BE CAST BELL-UP OR SPIGOT-UP.
9. MANUFACTURER'S NAME TO BE ON INSIDE FACE OF CONE.
10. EXTERIOR OF MANHOLE TO BE ASPHALT-COATED. TWO (2) COATS REQUIRED.

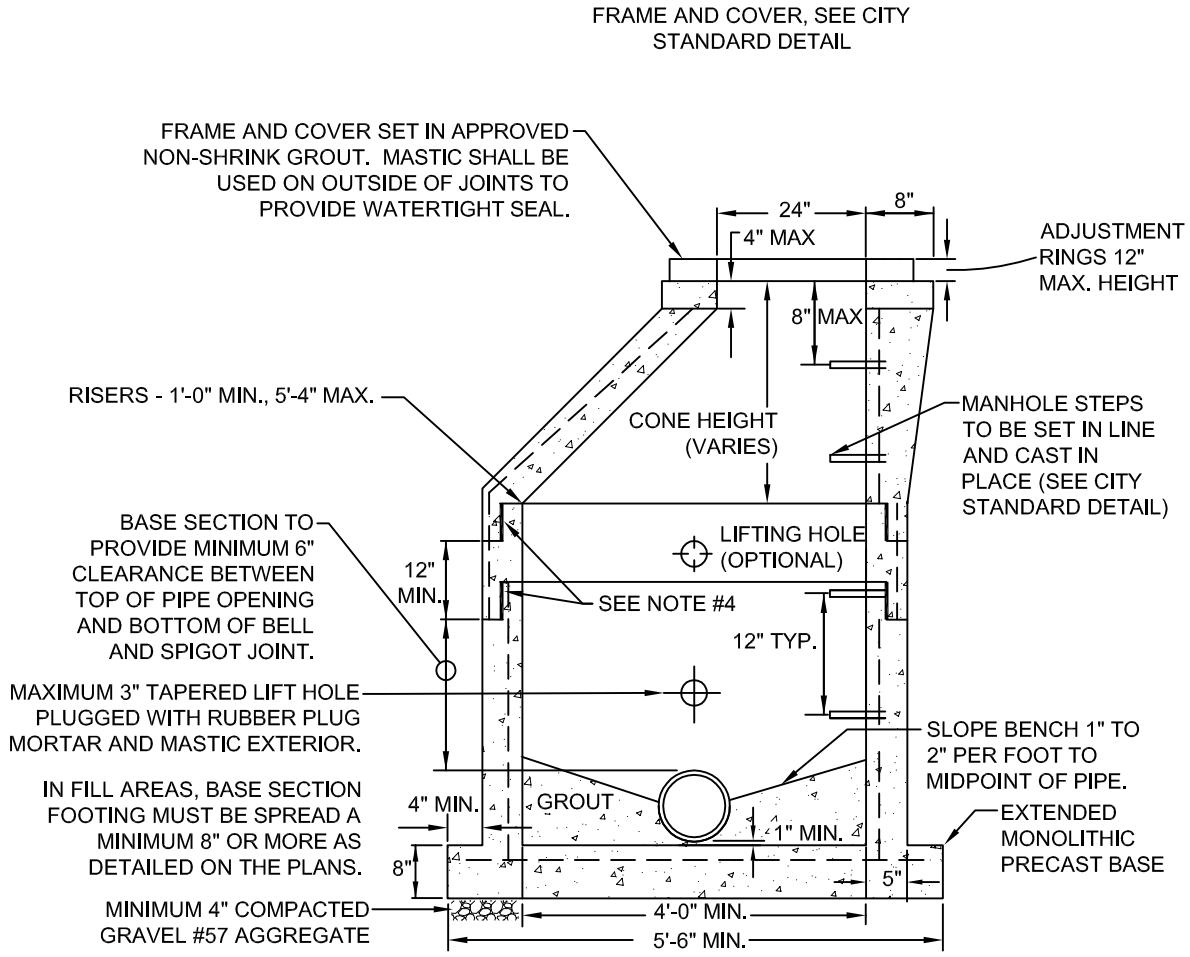

NOT TO SCALE

NO.	DATE	DESCRIPTION	INIT.
1.	7/01/04	2004 D&CSM UPDATE	DHG
2.	05/15/09	UPDATE ASTM REFERENCES	SDC

4'-0" I.D. SANITARY SEWER MANHOLE

DWG. NO 35

PAGE 49

1. MANHOLE TO MEET CURRENT REQUIREMENTS OF ASTM C-478.
2. ALL REINFORCING TO MEET CURRENT REQUIREMENTS OF ASTM A-615.
3. CONCRETE TO BE CLASS A-4.
4. JOINT TO MEET CURRENT REQUIREMENTS OF ASTM C-443.
5. PIONEER 301 MASTIC OR APPROVED EQUAL SHALL BE USED IN ADDITION TO THE JOINT SPECIFIED.
6. INVERT SHAPING TO CONFORM TO CITY STANDARD DETAIL.
7. FLEXIBLE JOINTS, MEETING CURRENT REQUIREMENTS OF ASTM C-923, ARE REQUIRED ON ALL PIPE CONNECTIONS TO MANHOLES. WHERE FIELD CONDITIONS WILL NOT PERMIT THE USE OF A SLEEVE, A MAXIMUM 24" STUB MAY BE USED.
8. JOINT CONFIGURATION MAY BE CAST BELL-UP OR SPIGOT-UP.
9. MANUFACTURER'S NAME TO BE ON INSIDE FACE OF CONE.
10. EXTERIOR OF MANHOLE TO BE ASPHALT-COATED. TWO (2) COATS REQUIRED.

MANHOLE DIMENSIONS

	MANHOLE DIAMETER IN FEET		
DIMENSIONS		5'0"	6'0"
	A	60"	72"
	B	84"	98"
	C	6"	7"
	D	8 MIN.	8 MIN.

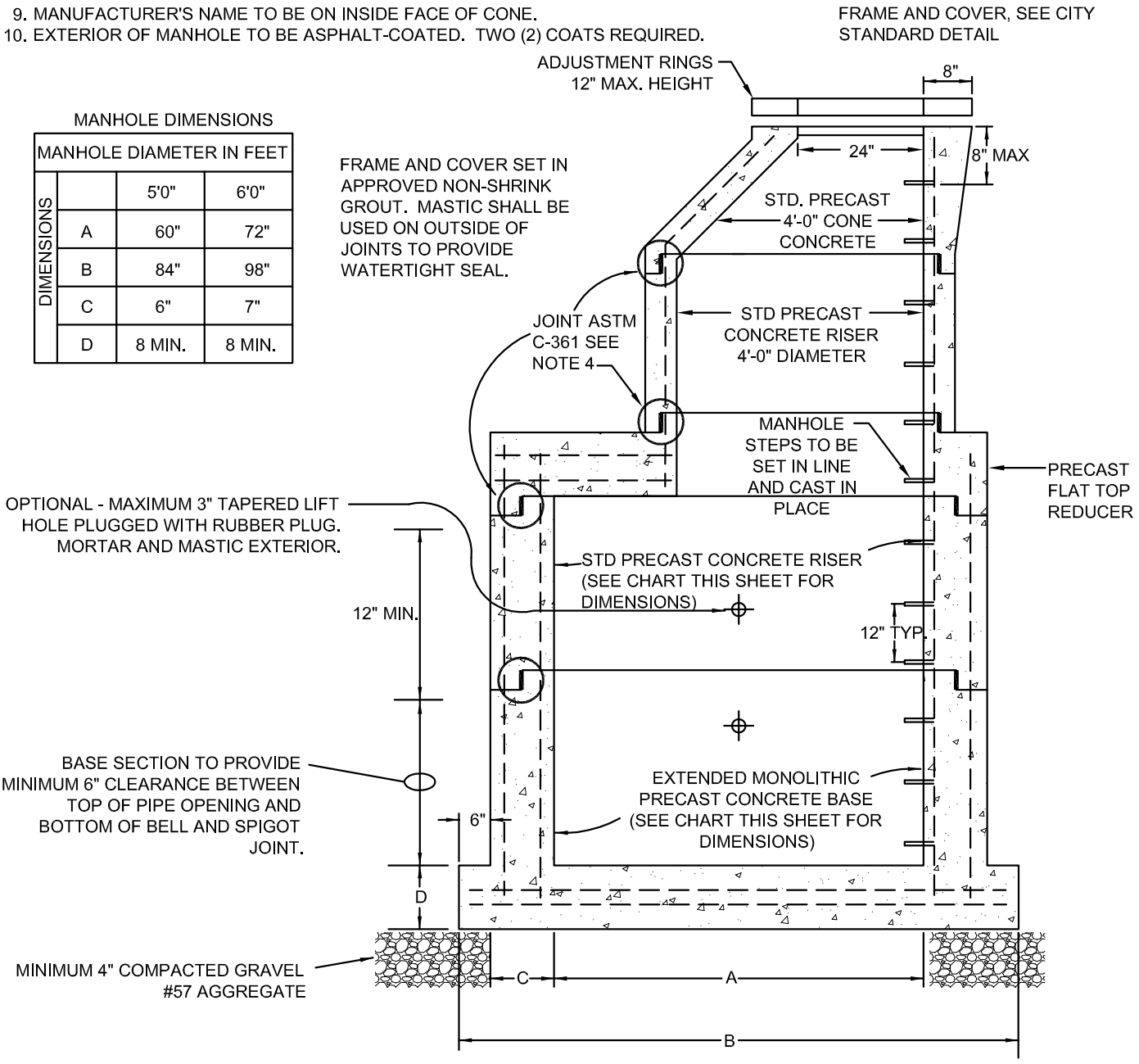

NOT TO SCALE

REVISIONS			
NO.	DATE	DESCRIPTION	INIT.
1.	7/01/04	2004 D&CSM UPDATE	DHG
2.	05/15/09	UPDATE ASTM REFERENCES	SDC

5'-0" AND 6'-0" I.D. SANITARY SEWER MANHOLES

DWG. NO. 36

PAGE 50

1. CONCRETE TO BE CLASS A-4.
2. ALL REINFORCING TO MEET CURRENT REQUIREMENTS OF ASTM A-615.
3. MANHOLE TO MEET CURRENT REQUIREMENTS OF ASTM C-478.
4. JOINT TO MEET CURRENT REQUIREMENTS OF ASTM C-443.
5. DOGHOUSE OPENING MAY ONLY BE USED WHEN PLACING A NEW MANHOLE OVER AN EXISTING LINE; OTHERWISE, THE OPENING MUST BE CAST. SIZE, LOCATION AND ANGLE OF ENTRY SHOULD BE AS REQUIRED BY THE PLANS.
6. MANHOLE SECTION TO BE CAST IN THE BASE A MINIMUM OF 2".
7. JOINT CONFIGURATION MAY BE CAST BELL-UP OR SPIGOT-UP.
8. HOLES IN PRECAST UNITS ARE TO BE 4" MINIMUM TO 8" MAXIMUM LARGER THAN THE OUTSIDE DIAMETER OF THE PROPOSED PIPE.
9. BASE SECTION TO PROVIDE MINIMUM 6" CLEARANCE BETWEEN TOP OF PIPE OPENING AND BOTTOM OF BELL AND SPIGOT JOINT.
10. INVERT SHAPING TO CONFORM TO CITY STANDARD DETAIL.
11. EXTERIOR OF MANHOLE TO BE ASPHALT-COATED. TWO (2) COATS REQUIRED.
12. PIONEER 301 MASTIC OR APPROVED EQUAL SHALL BE USED IN ADDITION TO THE JOINT SPECIFIED.

MIN. DIMENSIONS			
MH	4'0"	5'0"	6'0"
A	48"	60"	72"
B	58"	72"	86"
C	5"	6"	7"
D	6"	8"	10"

DIMENSIONS OF D SHALL BE TAKEN FROM BOTTOM OF KEY (SEE DRAWING)

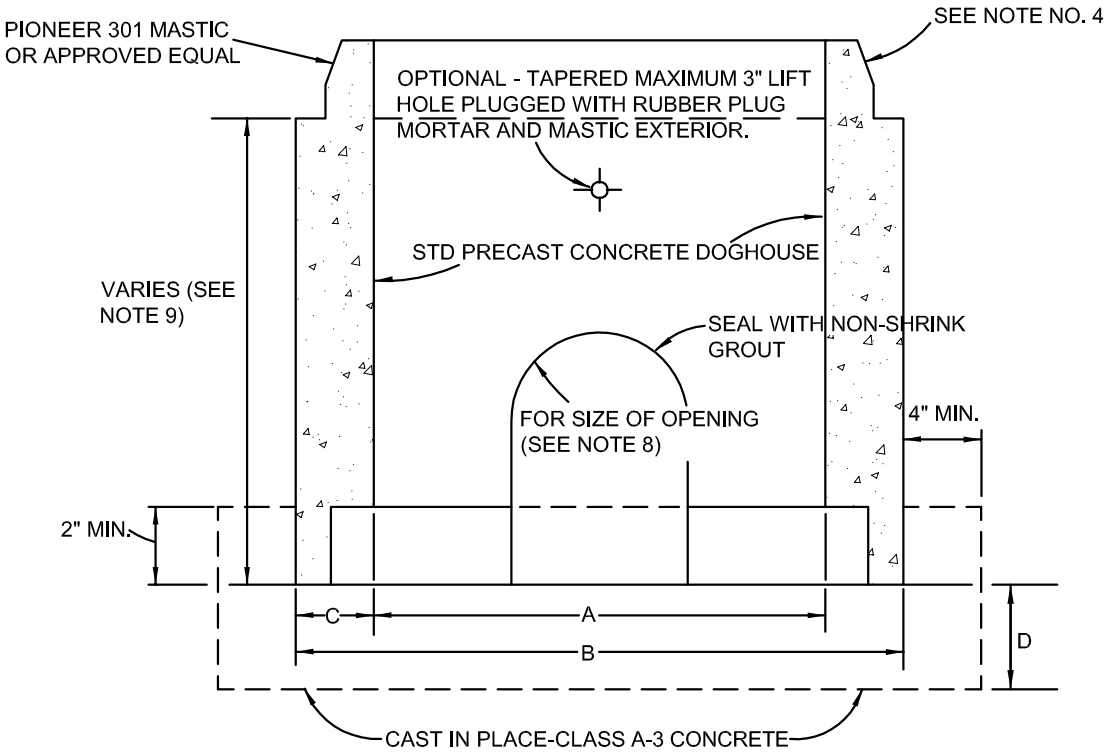

NOT TO SCALE

NO.	DATE	DESCRIPTION	INIT.
1.	7/01/04	2004 D&CSM UPDATE	DHG
2.	05/15/09	UPDATE ASTM REFERENCES	SDC

SANITARY SEWER MANHOLE DOGHOUSE BASE

DWG. NO 37

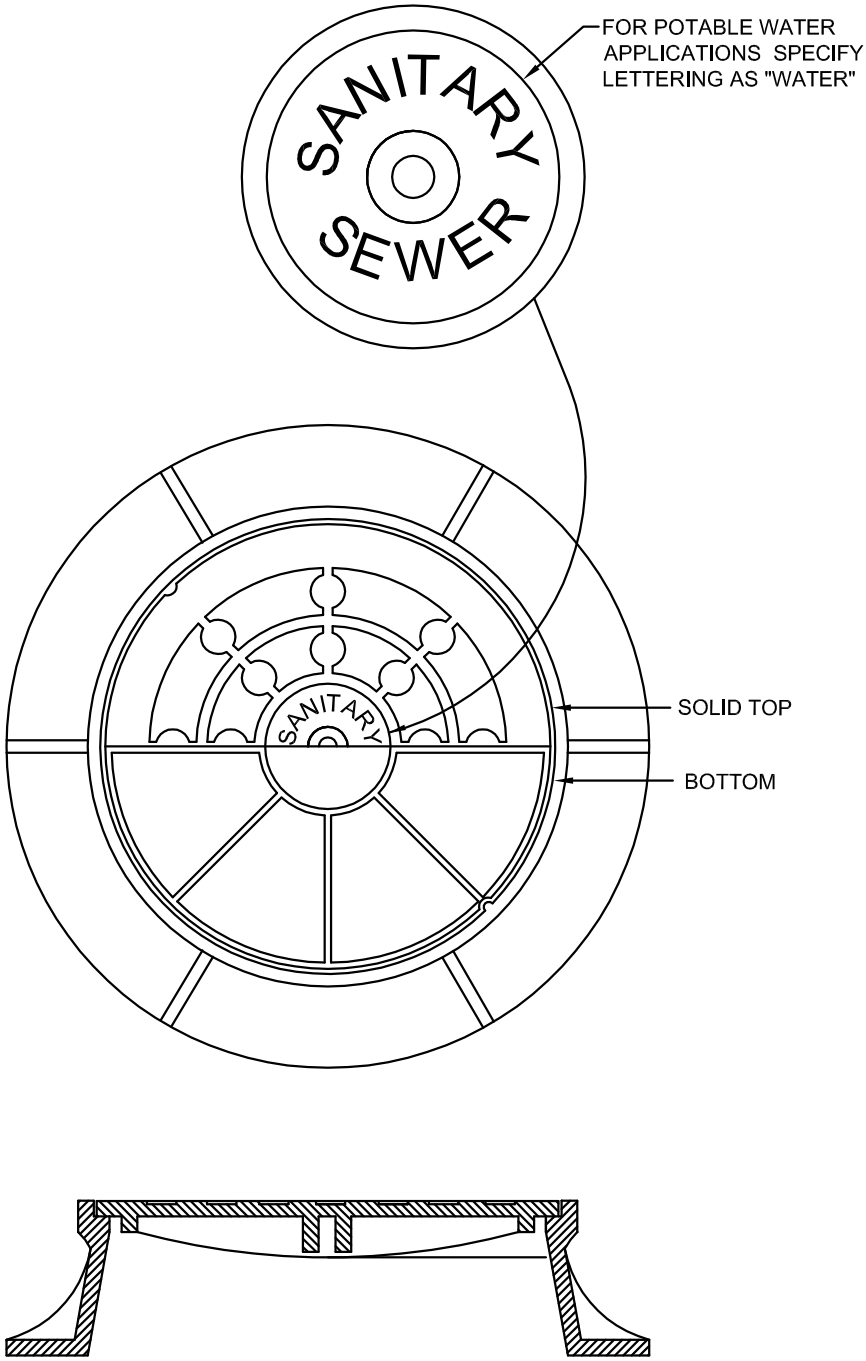

NOTES:

1. REFER TO PUBLIC UTILITIES PRODUCT MANUAL FOR APPROVED FRAME AND COVERS
2. FRAME AND COVER TO BE RATED FOR HIGHWAY TRAFFIC LOADS (HS-20)

NOT TO SCALE

REVISIONS			
NO.	DATE	DESCRIPTION	INIT.
1.	7/01/04	2004 D&CSM UPDATE	DHG
2.	2/22/06	VDEQ REVIEW COMMENTS	DHG

MANHOLE FRAME AND LID

DWG. NO. 38

PAGE 52

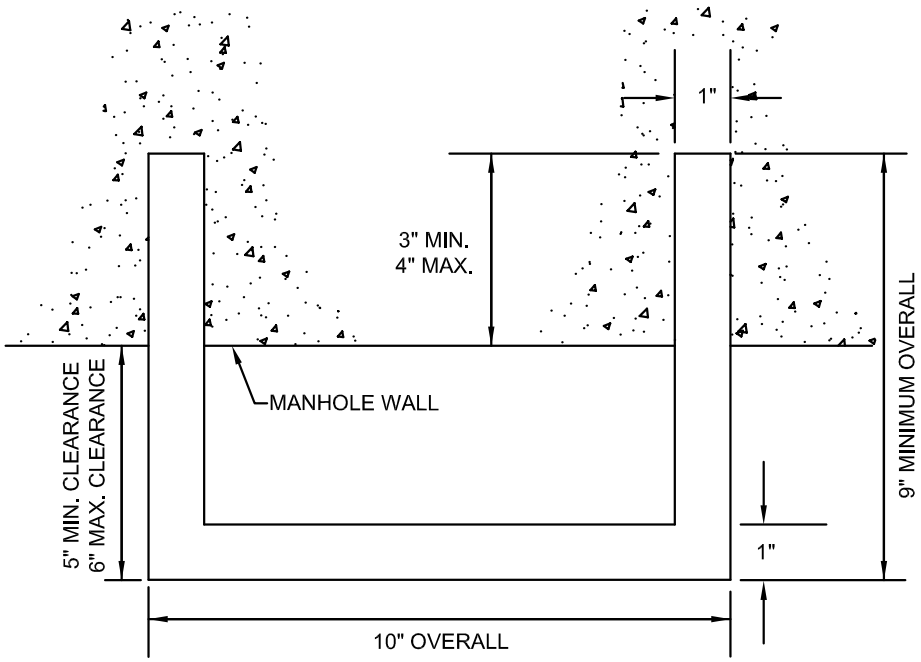

PLAN

NOTES:

1. APPROVED PLASTIC COATED STEEL REINFORCED MANHOLE SAFETY STEP (SEE PUBLIC UTILITIES PRODUCT MANUAL).

2. MANHOLE STEPS TO BE CAST IN PLACE AND ORIENTED IN A SINGLE VERTICAL LINE UNLESS OTHERWISE APPROVED.

NOT TO SCALE

REVISIONS			
NO.	DATE	DESCRIPTION	INIT.
1.	7/01/04	2004 D&CSM UPDATE	DHG

MANHOLE STEP DETAIL

DWG. NO. 39

PAGE 53

NOTES:

1. MANHOLE TO BE FORMED AND CONSTRUCTED IN ACCORDANCE WITH THE APPLICABLE STANDARD OR SPECIAL DRAWING. THE INVERT SHAPING AS DETAILED HEREON IS TO CONSIST OF PORTLAND CEMENT CONCRETE MIX CONFORMING TO CLASS A-3 OR CLASS C-1, EXCEPT THAT 25% OF COURSE AGGREGATE MAY BE UP TO 4" IN DIAMETER AND CONSIST OF STONE, BROKEN BRICK, BROKEN CONCRETE, OR BROKEN CONCRETE BLOCK. THE SURFACE SHALL BE LEFT SMOOTH BY MEANS OF HAND TROWELLING. NONE OF THE COARSE AGGREGATE SHALL REMAIN EXPOSED. BENCHES ARE TO HAVE A LIGHT BROOM FINISH.

2. DETAILS OF INVERT SHAPING AS SHOWN HEREON ARE FOR EXAMPLE PURPOSES ONLY. EACH MANHOLE IS TO BE SHAPED INDIVIDUALLY TO BEST FIT THE PARTICULAR INLET AND OUTLET CONFIGURATION AND FLOW LINES.

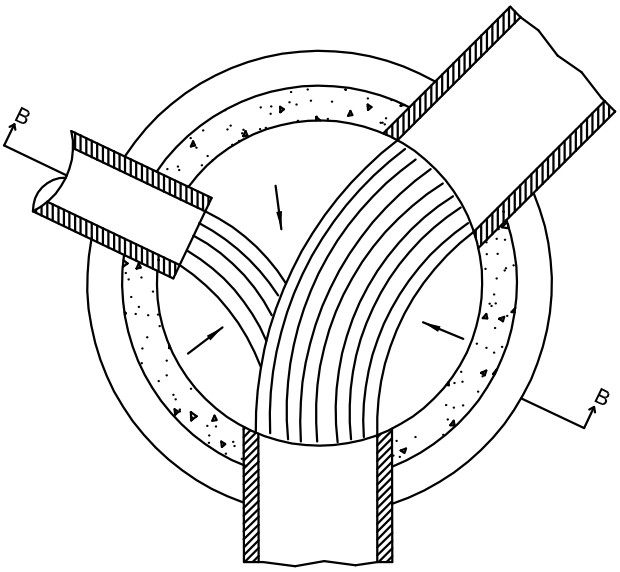

PLAN

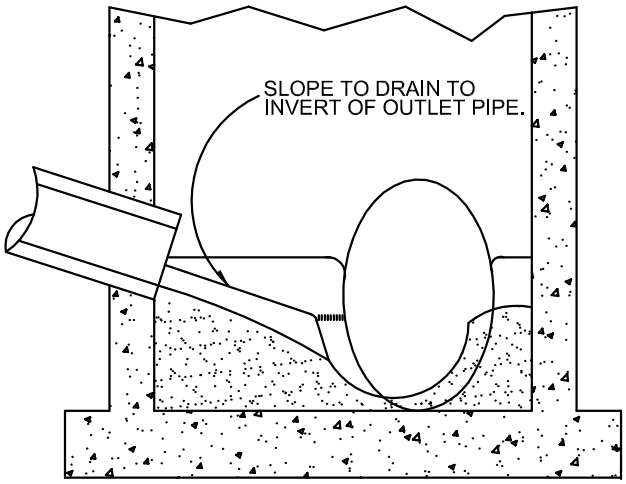

SECTION B-B

NOT TO SCALE

REVISIONS			
NO.	DATE	DESCRIPTION	INIT.
1.	7/01/04	2004 D&CSM UPDATE	SDC

SANITARY SEWER MANHOLE INVERT SHAPING

DWG. NO. 40

PAGE 54

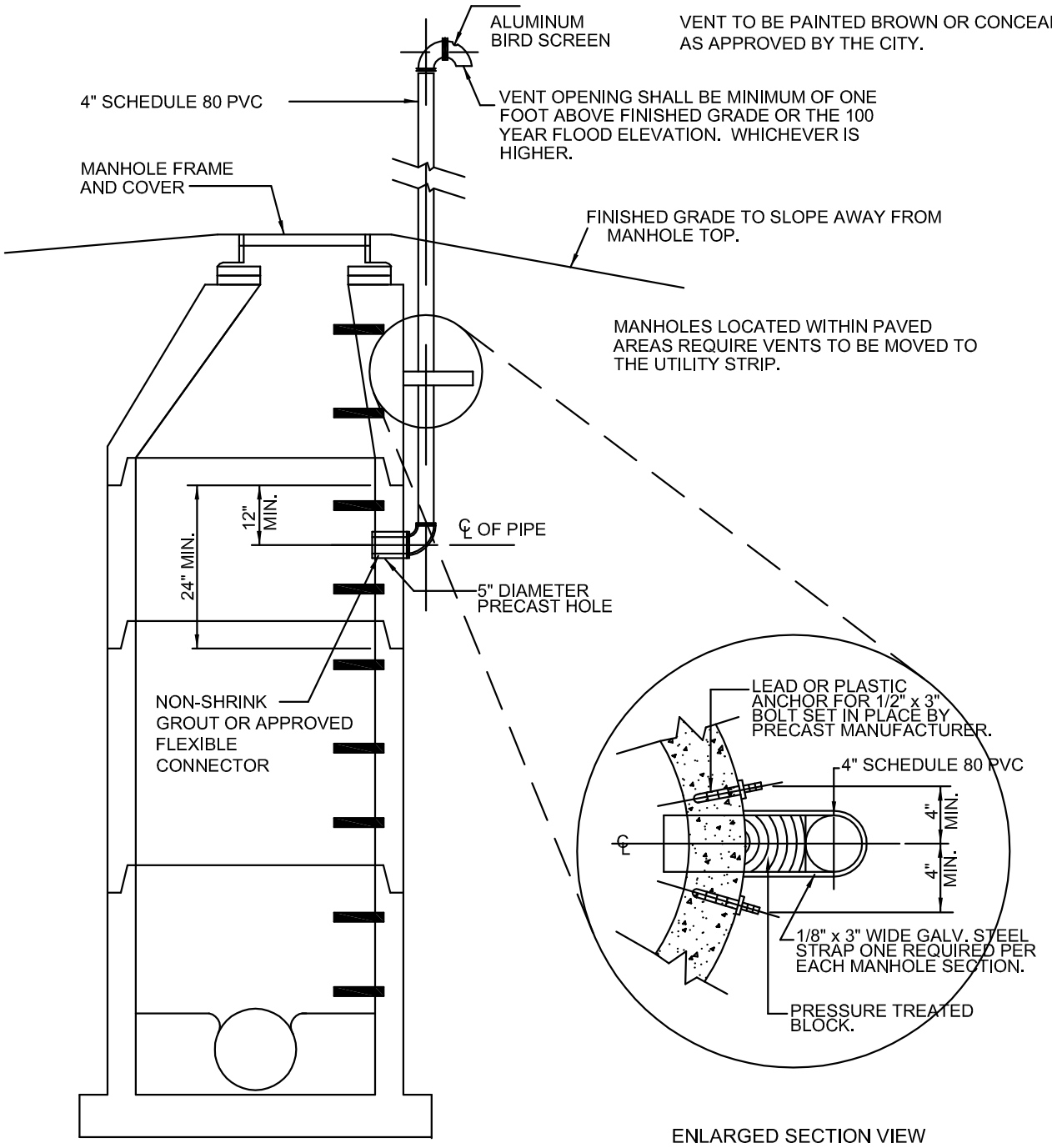

ENLARGED SECTION VIEW

NOTES:

1. VENT LOCATIONS SHALL BE INDICATED ON BOTH PLAN AND PROFILE
2. THE DESIGN ELEVATIONS OF THE VENT PIPE OPENING SHALL BE INDICATED ON BOTH PLAN AND PROFILE.
3. APPLICABLE WHERE CONTINIOUS WATERTIGHT SECTIONS GREATER THAN 1,000 FEET IN LENGTH ARE INCURRED.

NOT TO SCALE

REVISIONS			
NO.	DATE	DESCRIPTION	INIT.
1.	7/01/04	2004 D&CSM UPDATE	SDC

VENT FOR MANHOLES

DWG. NO. 41

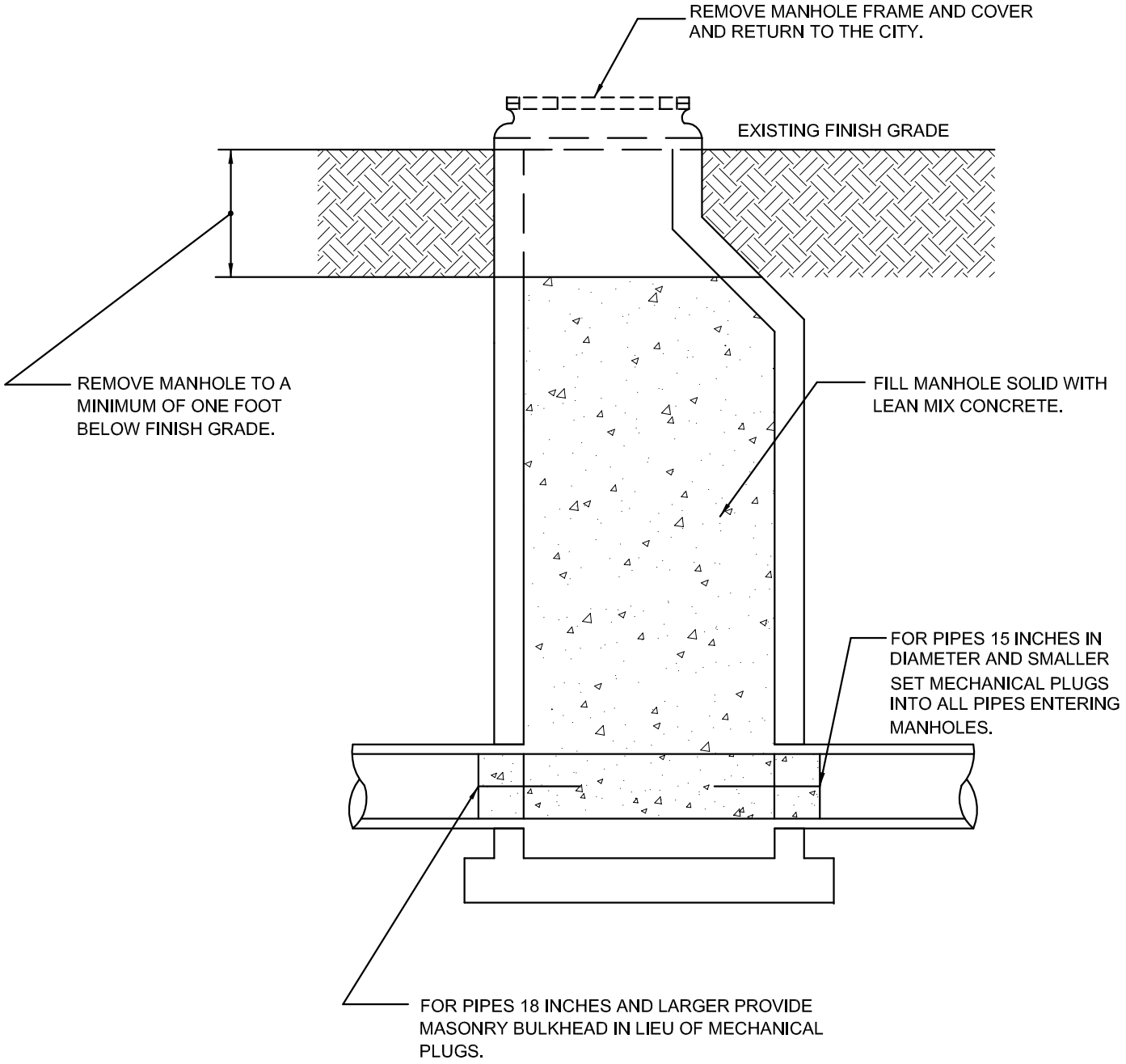

NOT TO SCALE

REVISIONS			
NO.	DATE	DESCRIPTION	INIT.
1.	7/01/04	2004 D&CSM UPDATE	SDC

SANITARY SEWER MANHOLE ABANDONMENT

DWG. NO. 42

PAGE 56

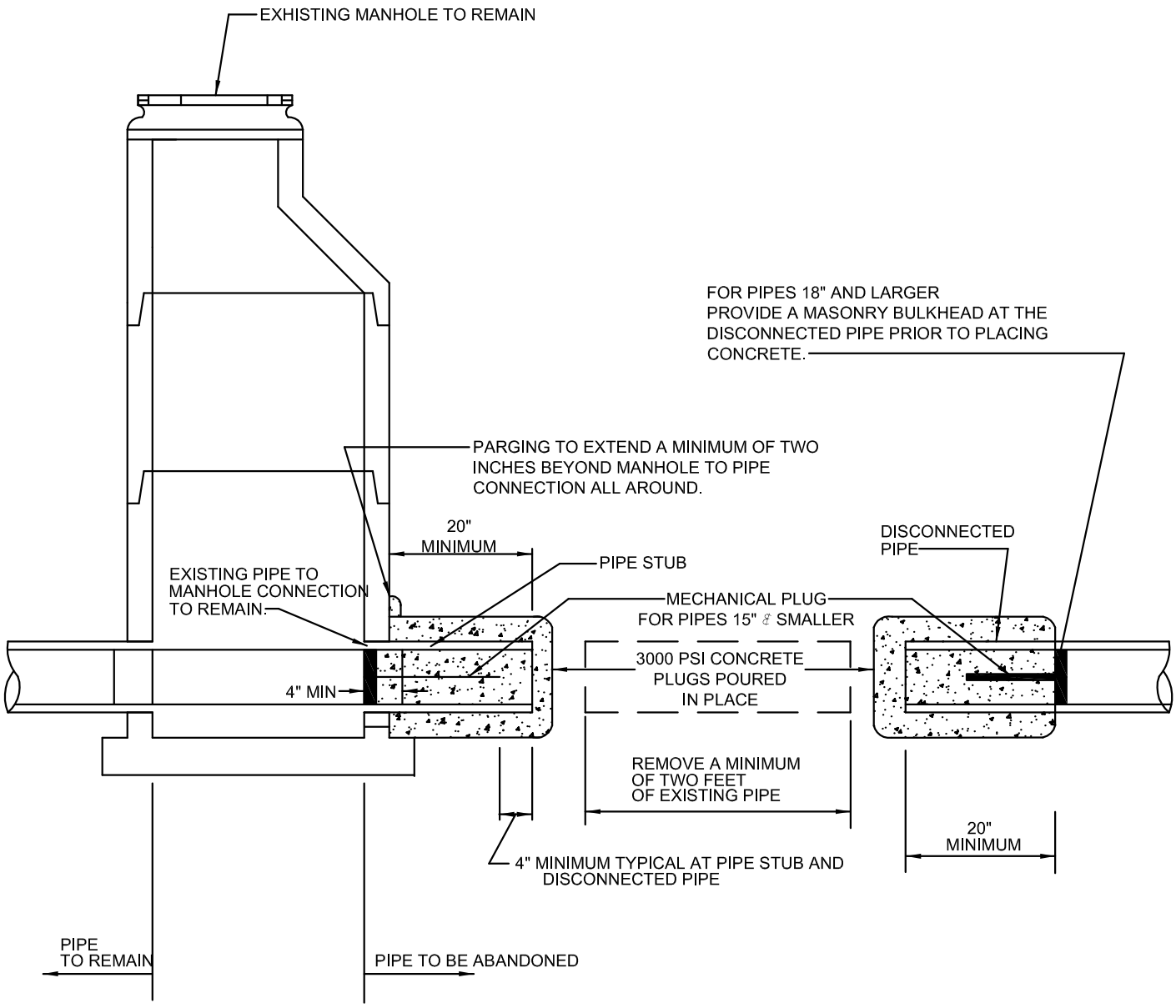

NOT TO SCALE

REVISIONS			
NO.	DATE	DESCRIPTION	INIT.
1.	9/21/04	2004 D&CSM UPDATE	SDC

SANITARY SEWER PIPE ABANDONMENT AT A MANHOLE

DWG. NO. 43

PAGE 57

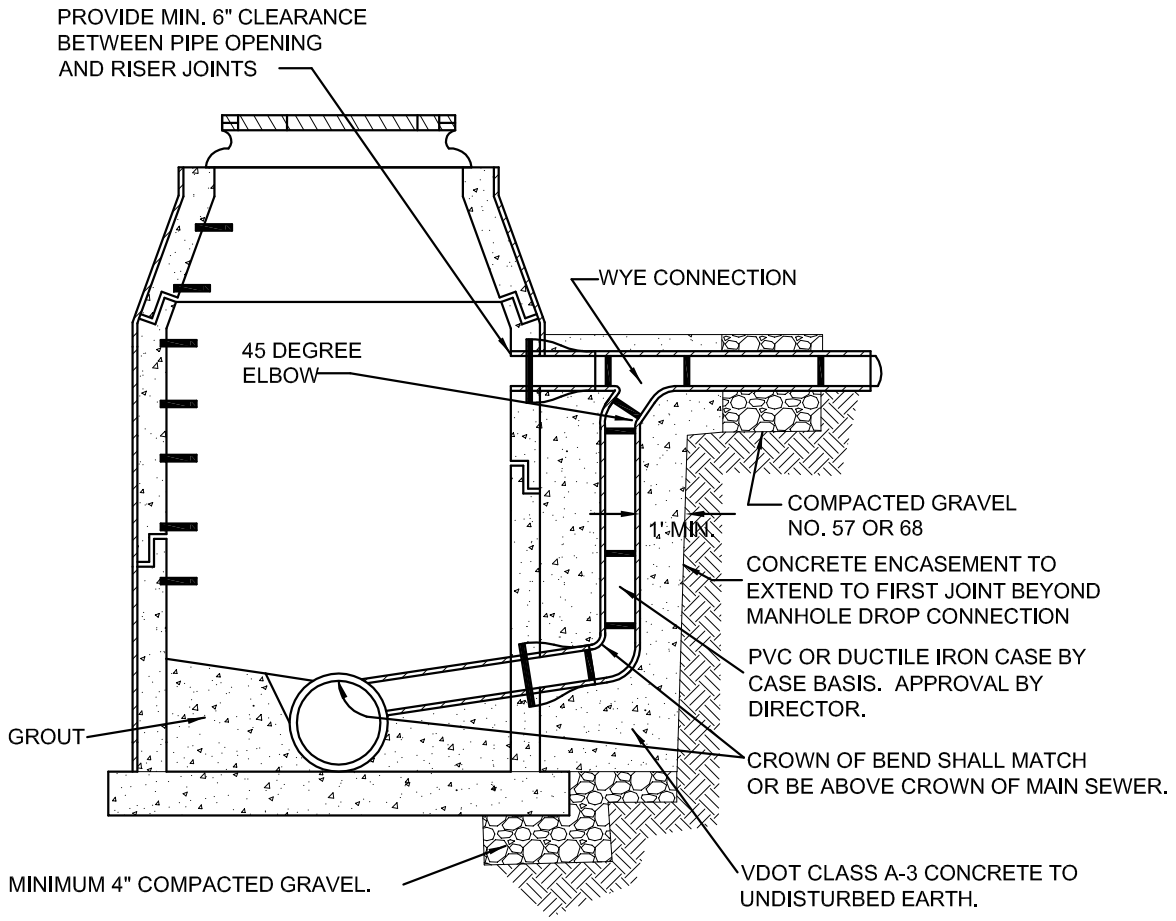

NOTES:

1. SEE APPLICABLE STANDARD DRAWINGS FOR ALL MANHOLE REQUIREMENTS.
2. USE DROP CONNECTION WHEN DROP EXCEEDS TWO FEET.
3. PIPE AND FITTINGS FOR DROP TO BE SAME SIZE AS INCOMING SEWER.
4. DROP CONNECTION MAY NOT INTERFERE WITH MANHOLE STEPS.
5. VDOT CLASS A-3 CONCRETE TO FILL DROP CONNECTION TRENCH TO LIMITS SHOWN. DROP CONNECTION CONCRETE WIDTH TO BE THE SAME AS APPROACH TRENCH.
6. MATERIAL SPECIFICATIONS SEE PUBLIC UTILITIES PRODUCT MANUAL.

NOT TO SCALE

REVISIONS					
NO.	DATE	DESCRIPTION	INIT.	ENCASED OUTSIDE DROP CONNECTION	DWG. NO. 44
1.	7/01/04	2004 D&CSM UPDATE	SDC		PAGE 58

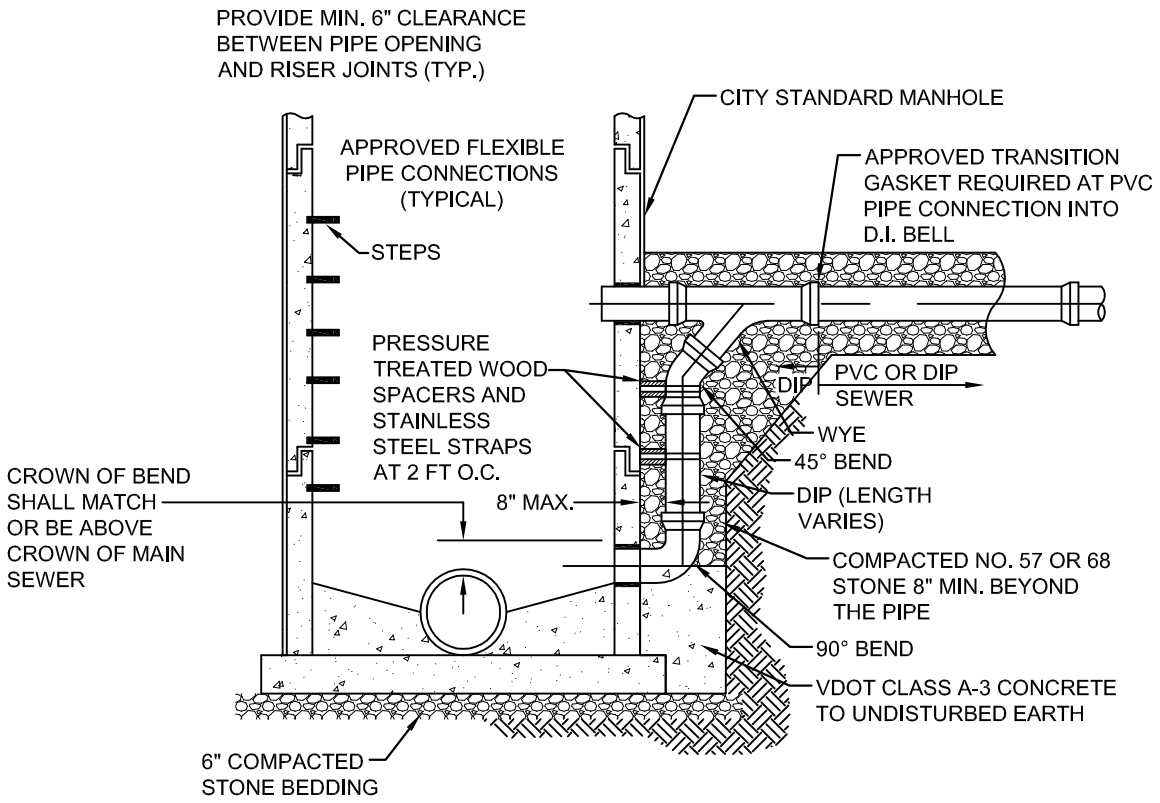

NOTES:

1. SEE APPLICABLE STANDARD DRAWINGS FOR ALL MANHOLE REQUIREMENTS.
2. USE DROP CONNECTION WHEN DROP EXCEEDS TWO FEET.
3. PIPE AND FITTINGS FOR DROP TO BE SAME SIZE AS INCOMING SEWER.
4. DROP CONNECTION MAY NOT INTERFERE WITH MANHOLE STEPS.
5. VDOT CLASS A-3 CONCRETE TO FILL DROP CONNECTION TRENCH TO LIMITS SHOWN. DROP CONNECTION CONCRETE WIDTH TO BE THE SAME AS APPROACH TRENCH.
6. MATERIAL SEE PUBLIC UTILITIES PRODUCT MANUAL.
7. STRAPS TO BE 2" WIDE X 1/8" THICK **STAINLESS STEEL**, ANCHORED TO MANHOLE WALL WITH 1/2" **STAINLESS STEEL** ANCHOR BOLTS, EMBEDDED 2 1/2" MINIMUM INTO THE WALL.
8. ALL DROP PIPE AND FITTINGS MUST BE DUCTILE IRON FOR THIS DESIGN.

NOT TO SCALE

REVISIONS				OUTSIDE DROP CONNECTION ALTERNATE A	DWG. NO. 44A
NO.	DATE	DESCRIPTION	INIT.		PAGE 58A
1.	7/01/04	2004 D&CSM UPDATE	DHG		

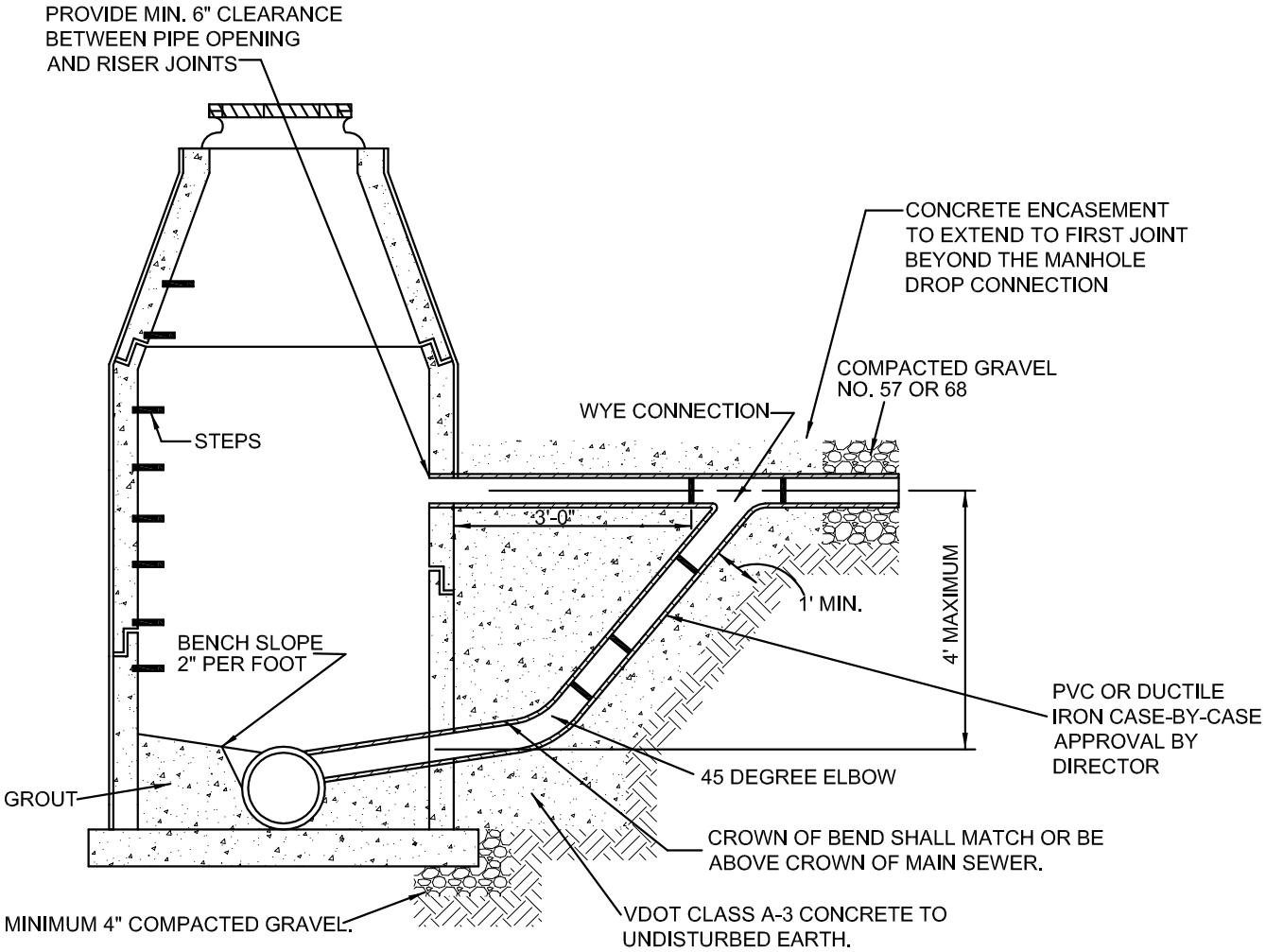

NOTES:

1. SEE APPLICABLE STANDARD DRAWINGS FOR ALL MANHOLE REQUIREMENTS.
2. USE DROP CONNECTION WHEN DROP EXCEEDS TWO FEET.
3. PIPE AND FITTINGS FOR DROP TO BE SAME SIZE AS INCOMING SEWER.
4. DROP CONNECTION MAY NOT INTERFERE WITH MANHOLE STEPS.
5. VDOT CLASS A-3 CONCRETE TO FILL DROP CONNECTION TRENCH TO LIMITS SHOWN. DROP CONNECTION CONCRETE WIDTH TO BE THE SAME AS APPROACH TRENCH.
6. MATERIAL SEE PUBLIC UTILITIES PRODUCT MANUAL.
7. THIS DRAWING MAY BE APPLICABLE WHEN LARGE PIPE FITTINGS WILL NOT FIT THE CONFIGURATION ON DRAWING 44.

NOT TO SCALE

REVISIONS			
NO.	DATE	DESCRIPTION	INIT.
1.	7/01/2004	2004 D&CSM UPDATE	SDC

OUTSIDE DROP CONNECTION ALTERNATE B

DWG. NO. 45

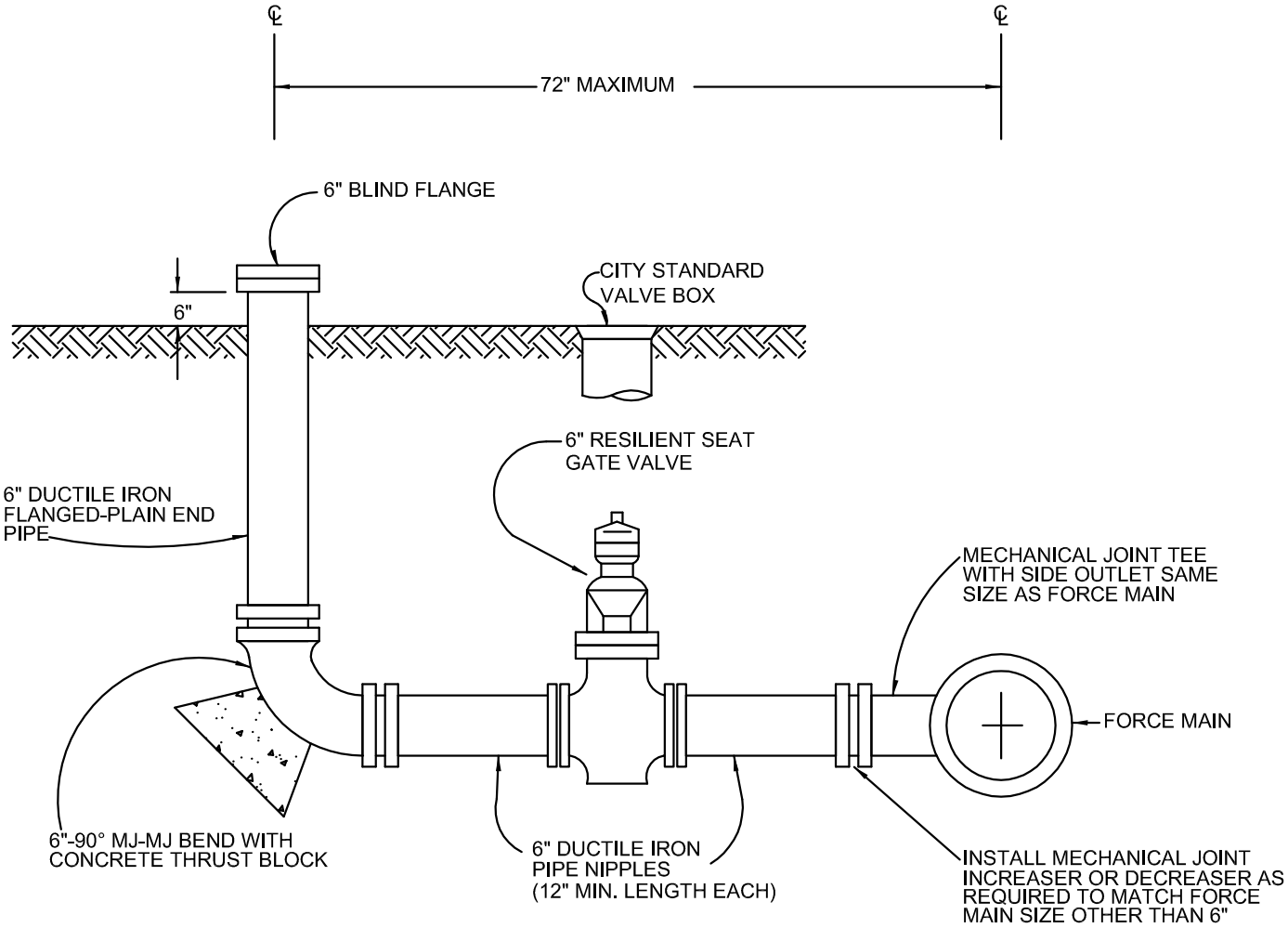

NOTES:

1. ALL MATERIALS, CONSTRUCTION AND TESTING TO CONFORM TO CITY STANDARD SPECIFICATIONS FOR SANITARY SEWER FORCE MAINS.
2. ALL JOINTS SHALL BE RESTRAINED WITH APPROVED MECHANICAL JOINT RESTRAINING GLANDS.
3. ALL FLANGES SHALL CONFORM TO ANSI B16.1 CLASS 125, DRILLED TO STANDARD 125 LB. TEMPLATE.

NOT TO SCALE

REVISIONS			
NO.	DATE	DESCRIPTION	INIT.
1.	7/01/04	2004 D&CSM UPDATE	SDC

EMERGENCY SEWER FORCE MAIN PUMP CONNECTION

DWG. NO. 46

PAGE 60

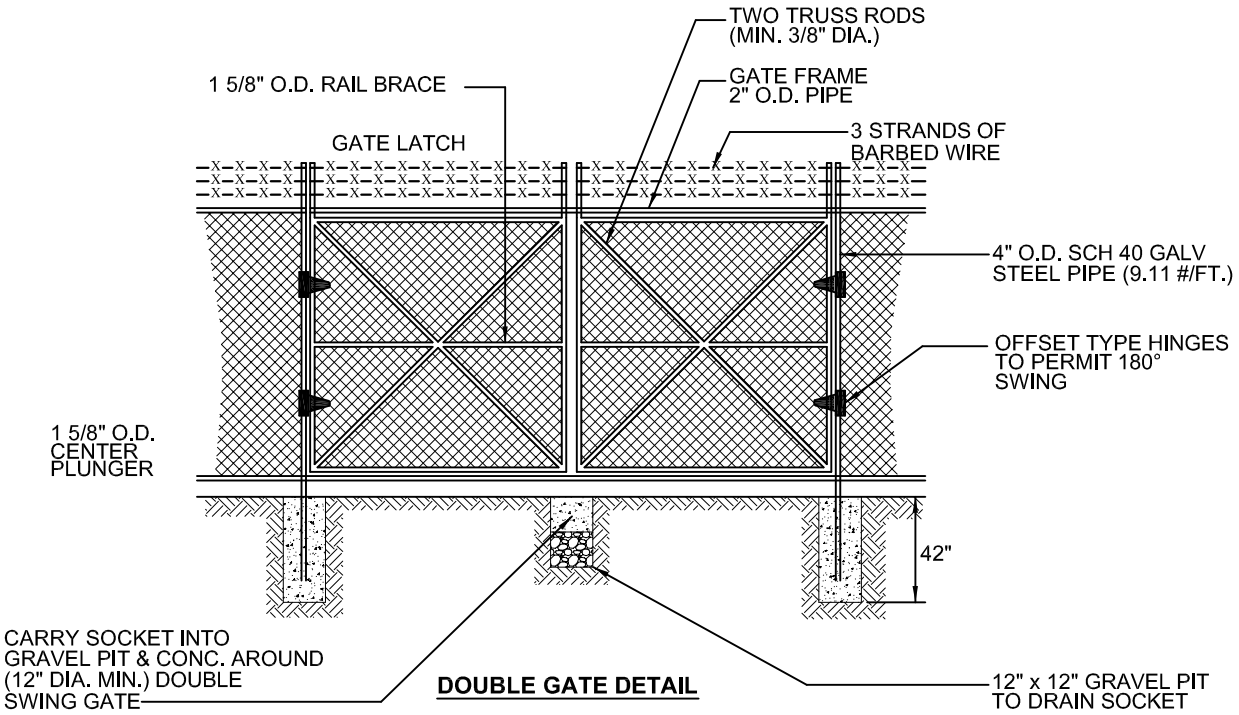

DOUBLE GATE DETAIL

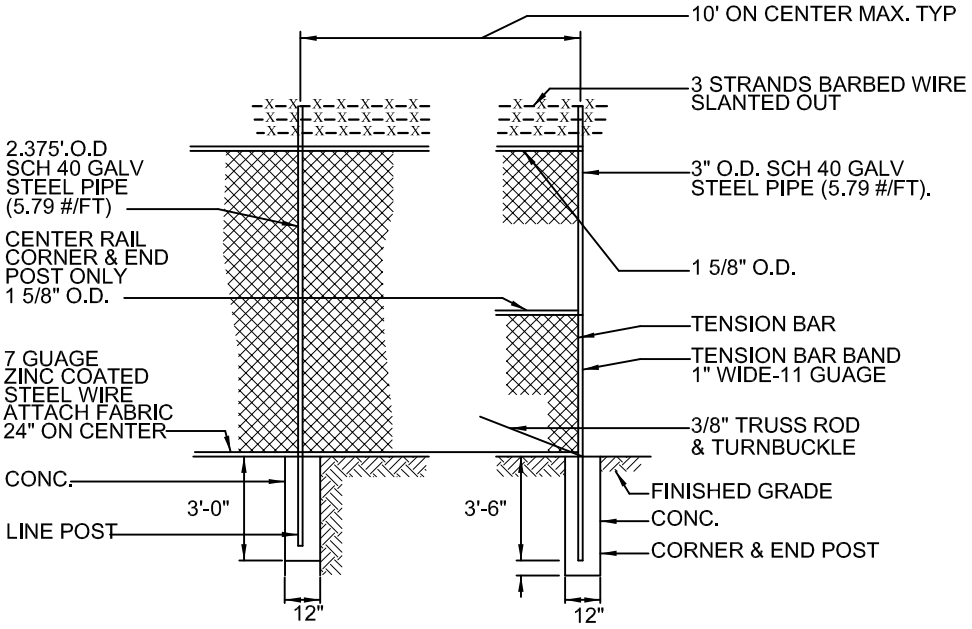

FENCE DETAIL

AS DESIGNATED BY DIRECTOR FOR SECURITY OF UTILITY INSTALLATIONS.

NOT TO SCALE

REVISIONS				CHAIN LINK FENCE	DWG. NO.
NO.	DATE	DESCRIPTION	INIT.		47
1.	7/01/04	2004 D&CSM UPDATE	SDC		PAGE
					61

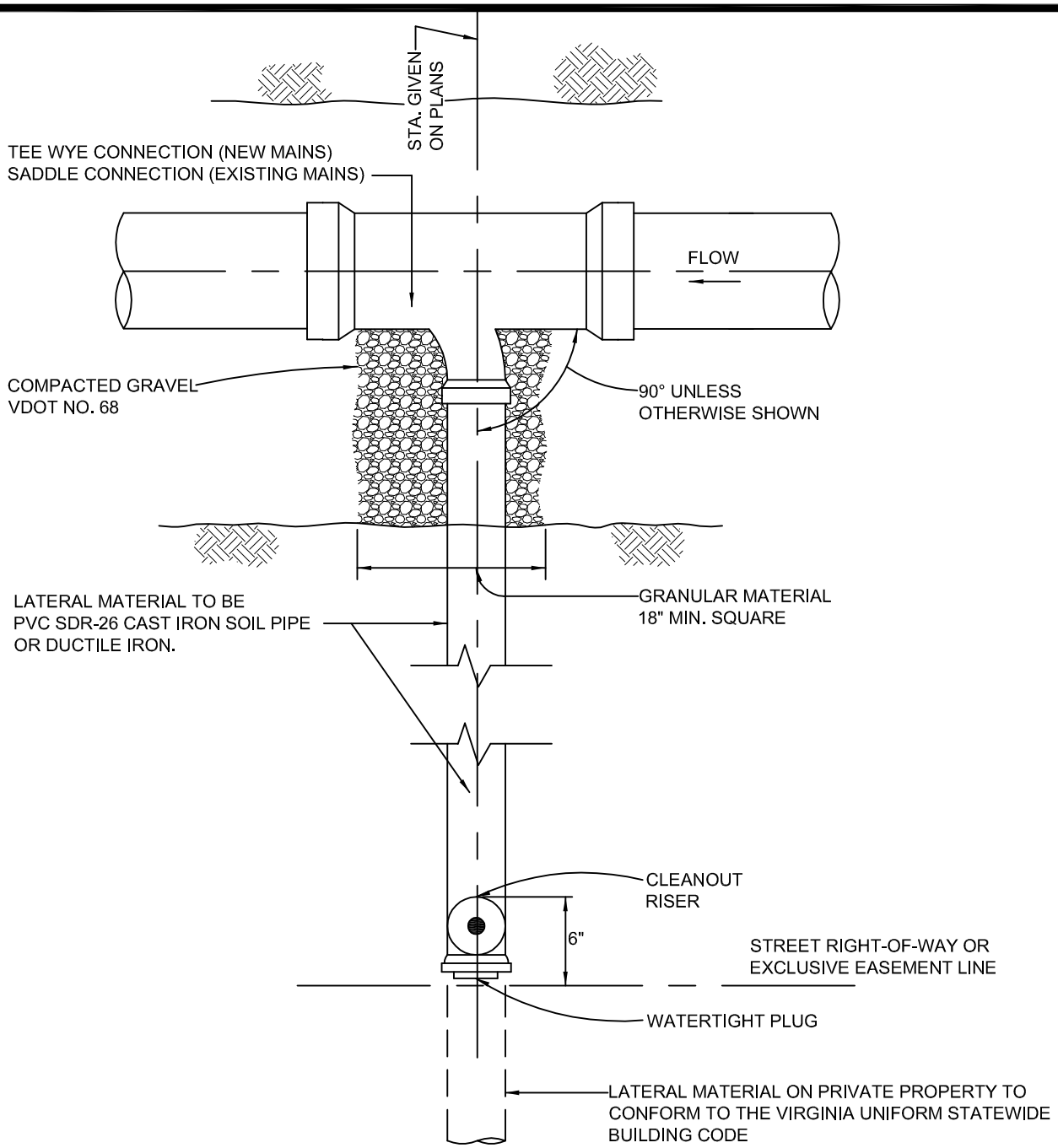

PLAN VIEW

(4" CONNECTION SHOWN)

NOTES:

1. UNLESS OTHERWISE APPROVED BY THE DIRECTOR, **NO** SIX INCH LATERALS WILL BE PERMITTED TO CONNECT TO SEWER MAINS, EXCEPT BY INSTALLATION OF A MANHOLE.
2. WHERE SIDEWALK IS TO BE CONSTRUCTED, THE CLEANOUT SHALL BE BETWEEN THE SIDEWALK AND RIGHT-OF-WAY LINE.
3. SEE CHAPTER 4 AND PUBLIC UTILITIES PRODUCT MANUAL.

NOT TO SCALE

REVISIONS			
NO.	DATE	DESCRIPTION	INIT.
1.	9/22/04	2004 D&CSM UPDATE	SDC

SANITARY SEWER LATERAL PLAN

DWG. NO. 48

PAGE 62

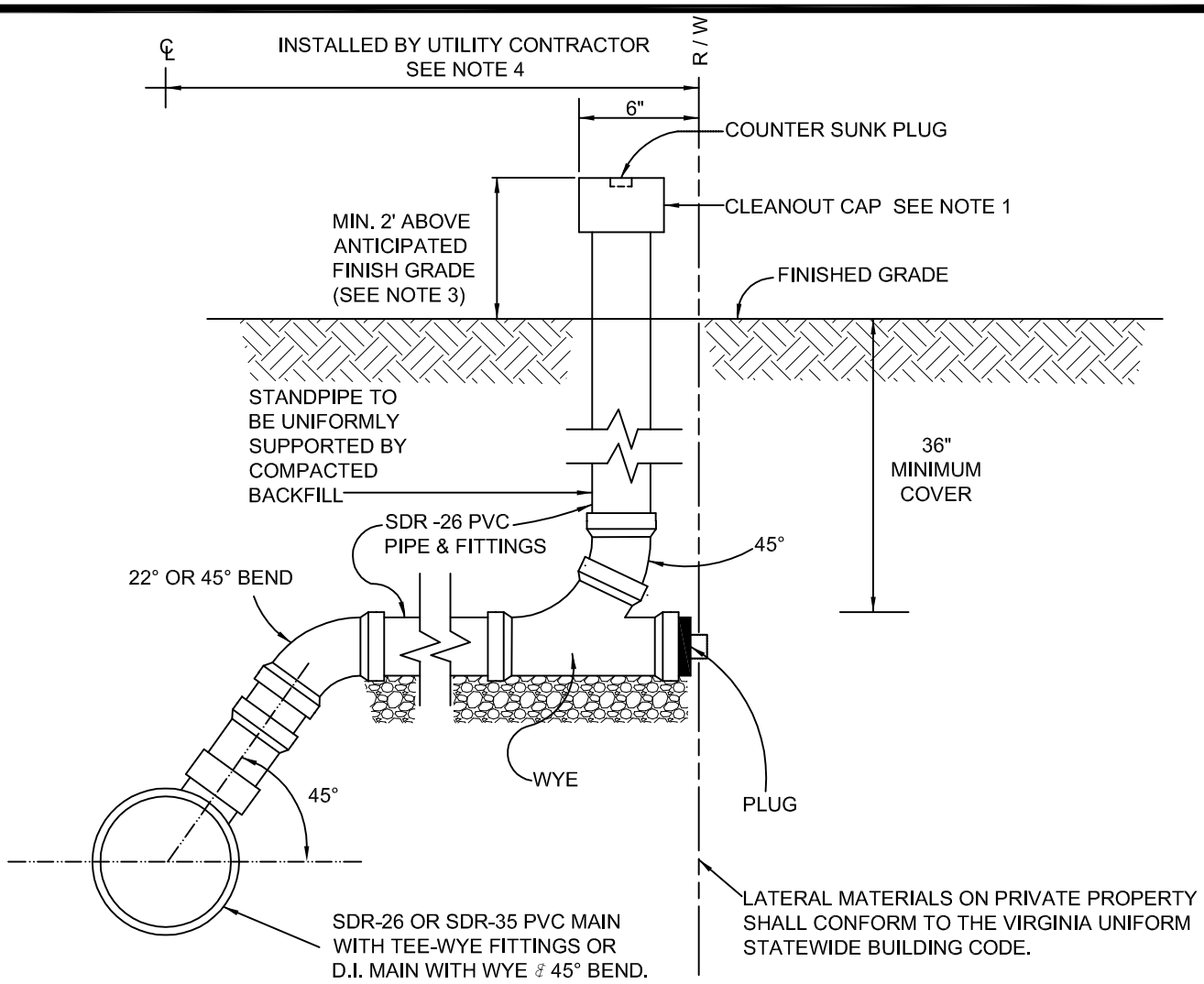

ELEVATION

(4" CONNECTION SHOWN)

NOTES:

1. CLEANOUT CAP SHALL BE AN APPROVED 4" CAST IRON CAP WITH A BRASS COUNTER-SUNK PLUG. PLASTIC PLUGS ARE NOT PERMITTED. (SEE PUBLIC UTILITIES PRODUCT MANUAL)
2. THIS DETAIL APPLIES TO CLEANOUTS NOT SUBJECT TO TRAFFIC LOADING. (SEE CITY STANDARD "HEAVY DUTY SEWER LATERAL CLEAN-OUT" FOR TRAFFIC LOCATIONS)
3. THE SEWER LATERAL AND CLEANOUT SHALL BE INSTALLED WITHIN THE RIGHT-OF-WAY OR EASEMENT AS SHOWN ABOVE BY UTILITY CONTRACTOR, PLUGGED AND STAKED. THE PLUMBER SHALL INSTALL THE SEWER LATERAL TO THE BUILDING AND SHALL ADJUST CLEANOUT TO FINISH GRADE.
4. CITY FORCES BECOME THE UTILITY CONTRACTOR WHEN TAPPING INTO AN EXISTING ACTIVE SEWER MAIN. WHERE TEE-WYE FITTINGS ARE NOT AVAILABLE FOR CONNECTION OF A PROPOSED 4" SEWER LATERAL, CITY FORCES SHALL MAKE THE TAP TO THE ACTIVE MAIN USING AN APPROVED SADDLE.
5. **4' DIAMETER PRECAST MANHOLE REQUIRED AT PUBLIC MAIN CONNECTION FOR 6" LATERALS.**

NOT TO SCALE

REVISIONS				SANITARY SEWER LATERAL (PROFILE)	DWG. NO. 49
NO.	DATE	DESCRIPTION	INIT.		PAGE 63
1.	9/22/04	2004 D&CSM UPDATE	SDC		
2.	02/22/06	P.U. MODIFICATIONS	DHG		

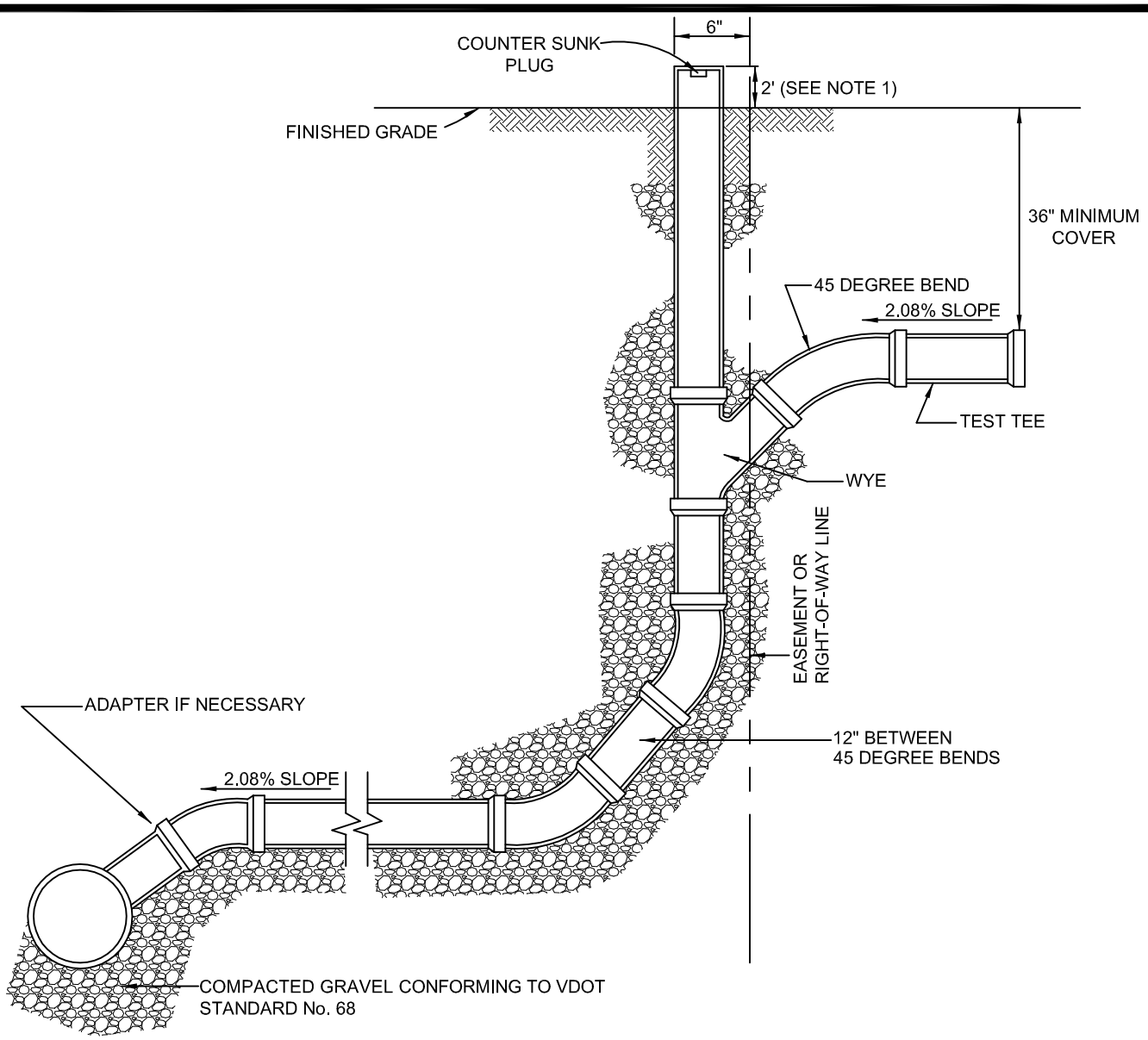

1. CONTRACTOR SHALL INSTALL A VERTICAL RISER TO AN ELEVATION TWO FEET ABOVE FINISHED GRADE TERMINATING WITH AN APPROVED CAP.
2. PLUMBER SHALL CUT THE VERTICAL RISER AT THE REQUIRED ELEVATION TO SERVICE THE BASEMENT AND INSTALL A WYE, A 45 DEGREE FITTING, AND TEST TEE. THE VERTICAL RISER SHALL THEN BE EXTENDED TO SURFACE GRADE AND PLUGGED TO SERVE AS A CLEANOUT.
3. THE LATERAL RISER PIPE AND FITTINGS SHALL MEET CITY DESIGN AND CONSTRUCTION STANDARDS FOR WATER AND SEWER UTILITIES.
4. THIS STANDARD FOR LATERAL FOR DEEP SEWER IS ONLY APPLICABLE WHERE THE MAIN SEWER IS AT A DEPTH GREATER THAN TEN FEET BELOW THE FINISHED GRADE.
5. THE VERTICAL SECTION SHALL BE PLACED ABOVE THE MAIN ONLY WHEN TAPPING AN EXISTING MAIN. A BELL SHALL BE PLACED AT THE TAPPING SADDLE TO PREVENT THE STACK FROM PUSHING INTO THE MAIN.
6. CITY FORCES BECOME THE UTILITY CONTRACTOR WHEN TAPPING INTO AN EXISTING SEWER MAIN.
7. FOR PIPE MATERIAL REQUIREMENTS, SEE CITY STANDARD DRAWINGS 48 & 49 AND PUBLIC UTILITIES PRODUCT MANUAL.

NOT TO SCALE

REVISIONS

NO.	DATE	DESCRIPTION	INIT.
1.	9/22/04	2004 D&CSM UPDATE	SDC
2.	02/22/06	P.U. MODIFICATIONS	DHG

4" LATERAL FOR DEEP SEWER

DWG. NO. 50

PAGE 64

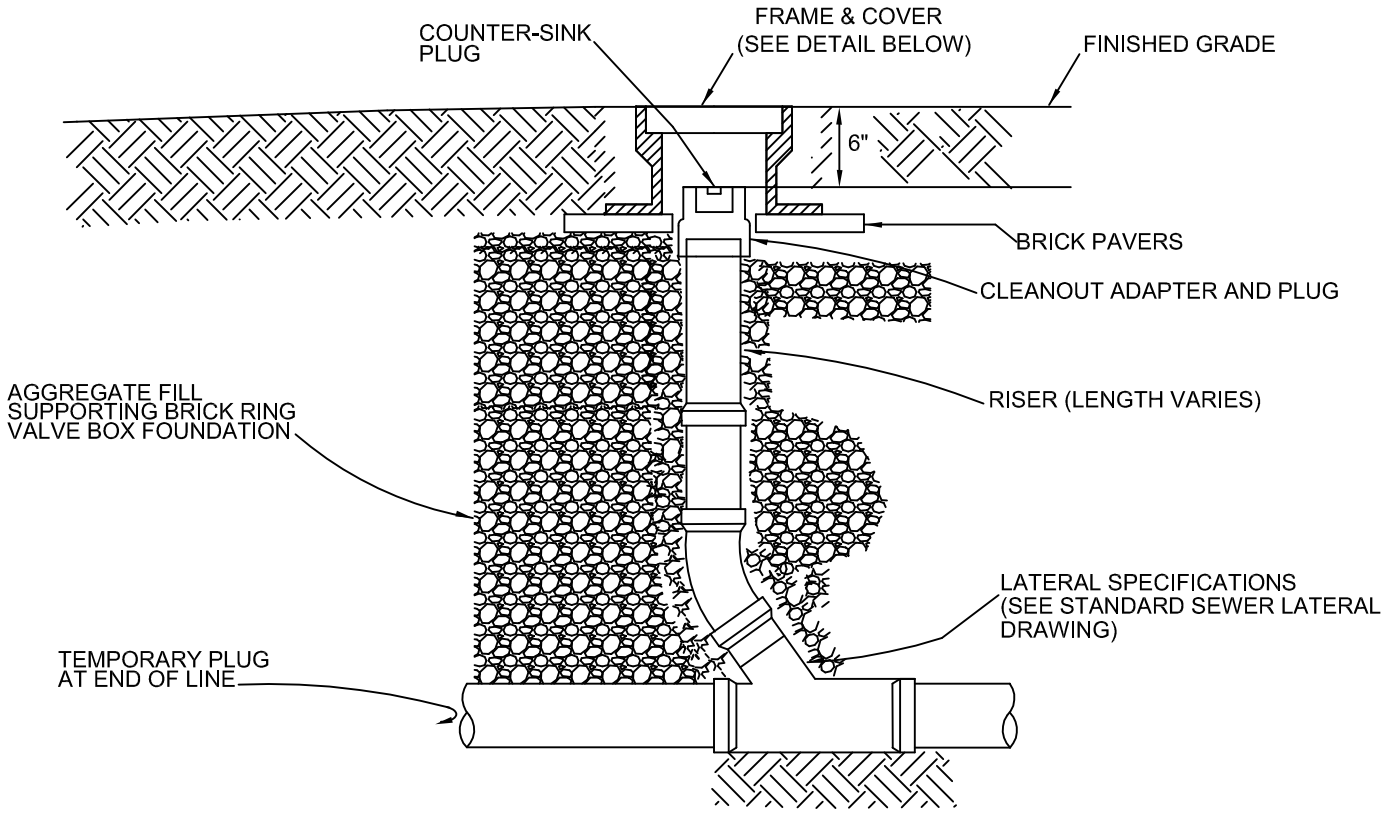

ELEVATION

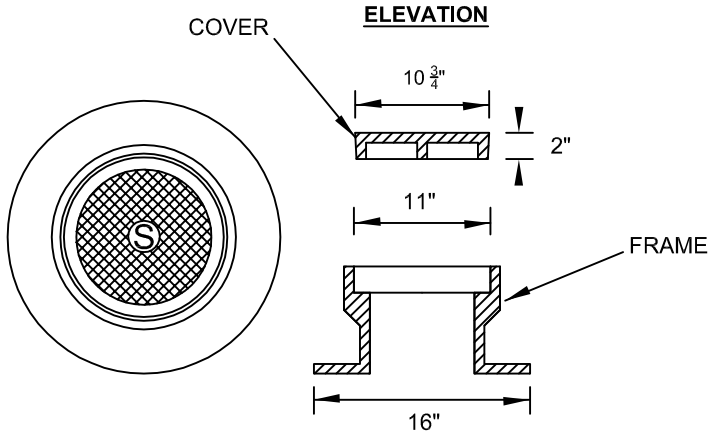

FRAME & COVER DEATAIL

NOTES:

1. FRAME & COVER CASTING TO BE GRAY IRON CONFORMING TO ASTM A48, CLASS 30 WITH BITUMEN COATING, RATED FOR HS-20 TRAFFIC LOADING. SEE PUBLIC UTITILTIES PRODUCT MANUAL.
2. THIS ARRANGEMENT TO BE UTILIZED WHEN THE CLEANOUT IS LOCATED IN A TRAVELWAY, STREET OR PARKING LOT.

NOT TO SCALE

REVISIONS			
NO.	DATE	DESCRIPTION	INIT.
1.	5/27/04	2004 D&CSM UPDATE	ELR

HEAVY DUTY SANITARY LATERAL CLEAN-OUT

DWG. NO. 51

PAGE 65

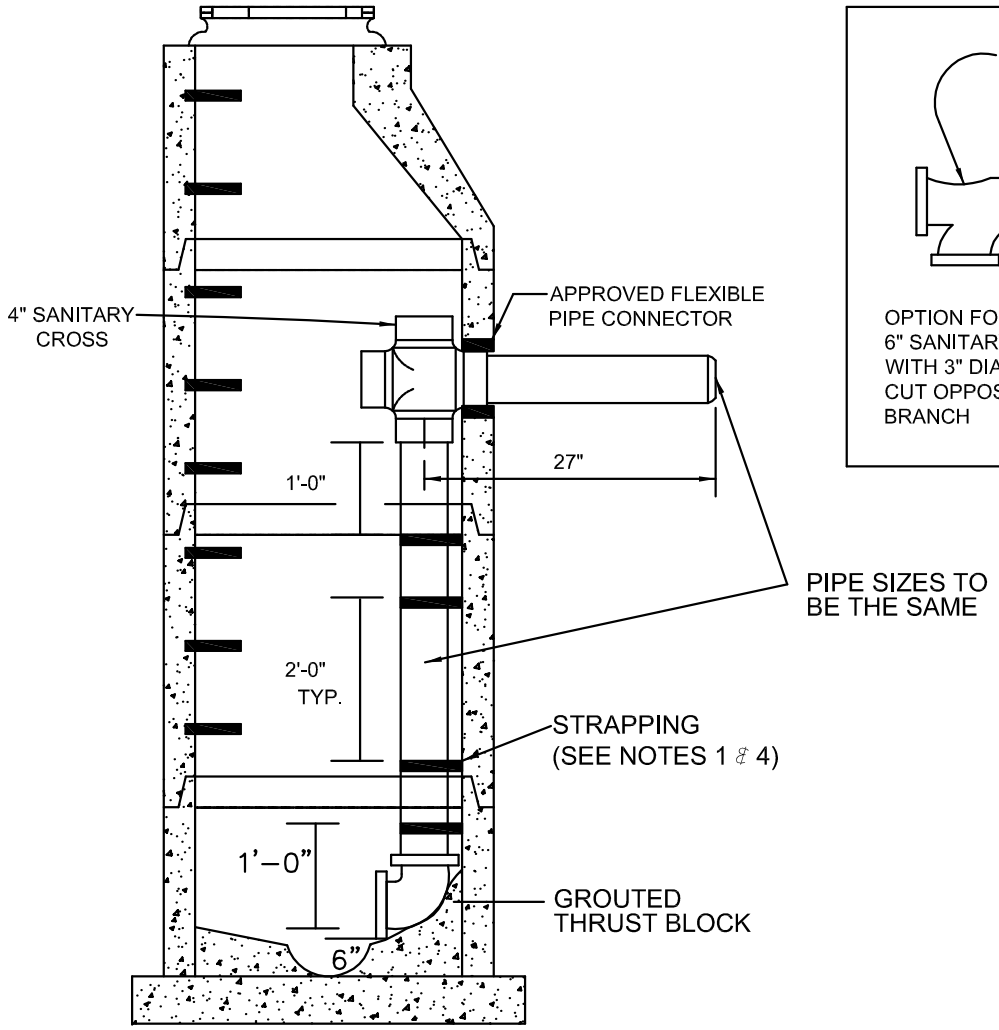

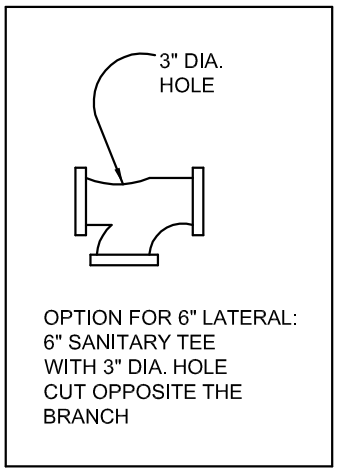

NOTES:

1. THE VERTICAL STACK SHALL BE STRAPPED TO THE MANHOLE ONE FOOT BELOW THE SANITARY CROSS, EVERY TWO FEET AND ONE FOOT FROM THE BOTTOM W/ STAINLESS STEEL STRAPS AND ANCHOR BOLTS.
2. THE ELBOW AT THE BOTTOM OF THE STACK MAY BE EITHER A 45 OR 90 DEGREE BEND PLACED IN THE DIRECTION OF FLOW IN THE MANHOLE WITH A BENCH CONSTRUCTED TO CONFORM TO SPECIFICATIONS FOR MANHOLE BENCH.
3. DROP CONNECTION SHALL BE SCHEDULE 40 CEMENT WELD PIPE.
4. STRAPS TO BE 2" WIDE x 1/8" THICK **STAINLESS STEEL** ANCHORED TO MANHOLE WALL W/ 1/2" DIA. **STAINLESS STEEL** ANCHOR BOLTS EMBEDDED 2-1/2" MINIMUM INTO THE WALL.
5. USE OF INSIDE DROP TO BE APPROVED BY THE DIRECTOR, ON A CASE-BY-CASE BASIS. (NOT APPLICABLE TO SANITARY SEWER MAINS)

NOT TO SCALE

REVISIONS			
NO.	DATE	DESCRIPTION	INIT.
1.	9/21/04	2004 D&CSM UPDATE	SDC

INSIDE DROP CONNECTION FOR 4" & 6" LATERALS

DWG. NO. 52

PAGE 66

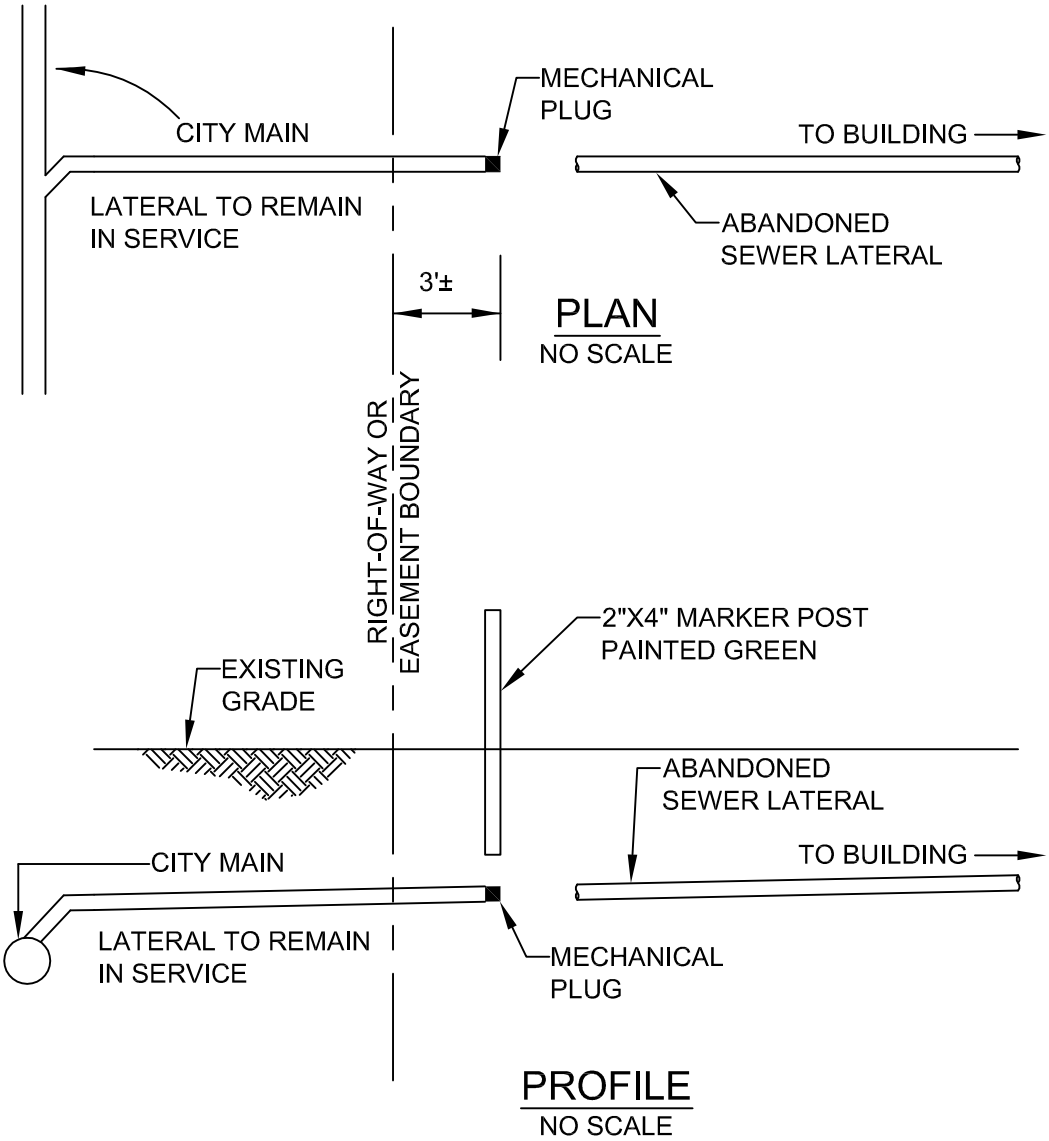

NOTES:

1. ARRANGEMENT SHOWN IS APPLICABLE TO BUILDING SEWER LATERALS TO BE **TEMPORARILY** PLUGGED BY THE CONTRACTOR FOR DEVELOPER RE-USE.

2. IN CASES WHERE THE SANITARY SEWER LATERAL IS TO BE ABANDONED **PERMANENTLY**, CITY FORCES WILL PERFORM ABANDONMENT WORK AT THE PUBLIC MAIN FOR APPLICABLE CITY CODE FEES.

NOT TO SCALE

NO.	DATE	DESCRIPTION	INIT.
1.	9/21/04	2004 D&CSM UPDATE	SDC

TEMPORARY SANITARY LATERAL DISCONNECTION

DWG. NO 53

PAGE 67

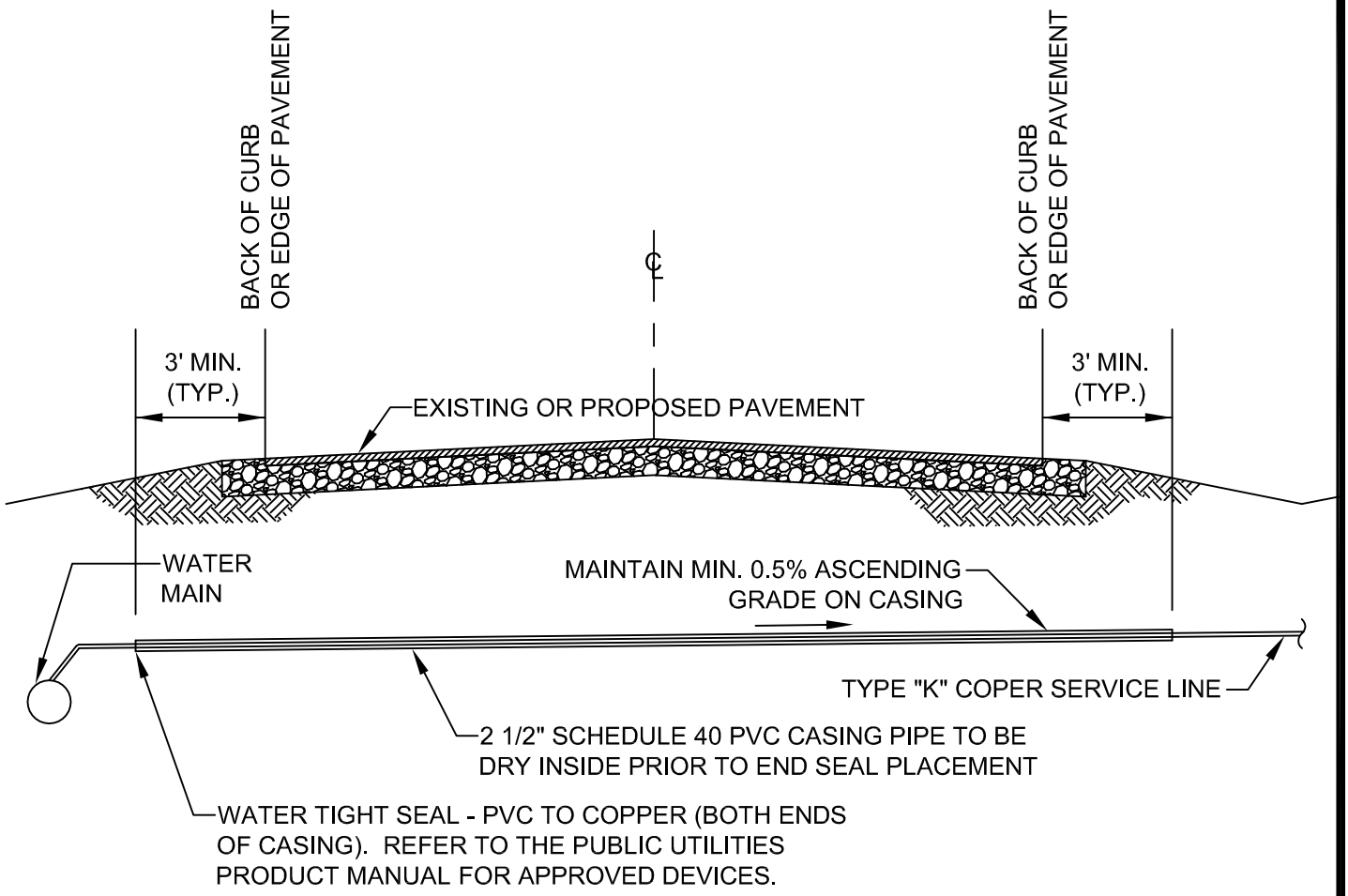

NOTES: 1) APPLICABLE FOR 3/4" AND 1" SERVICE SIZES.

2) UNIONS SHALL NOT BE INSTALLED WITHIN THE CASING WITHOUT PRIOR APPROVAL BY THE DIRECTOR.

3) GENERALLY REQUIRED IN SUBDIVISIONS OUTSIDE THE CITY LIMITS, GOVERNED BY V.D.O.T. STANDARDS.

NOT TO SCALE

NO.	DATE	DESCRIPTION	INIT.
1.	9/21/04	2004 D&CSM UPDATE	SDC

WATER SERVICE CASING DETAIL

DWG. NO 54

PAGE 68

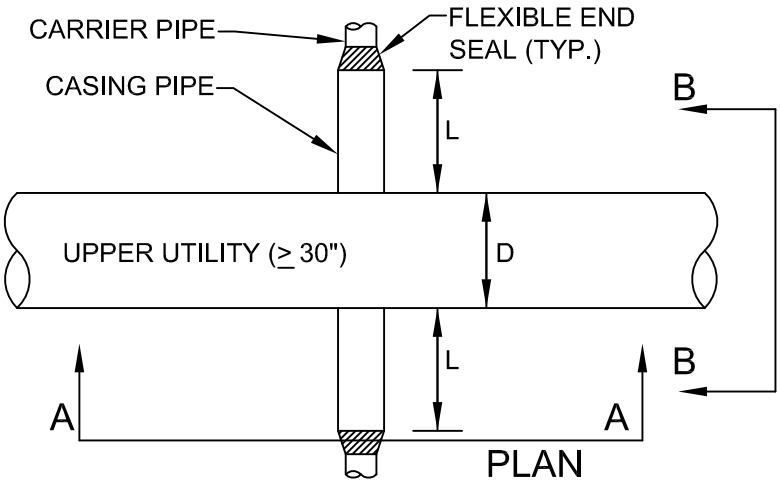

PLAN

NO SCALE

NOTE:
THIS DETAIL IS APPLICABLE TO PVC AND DUCTILE IRON PRESSURE AND GRAVITY MAINS *ONLY* WHEN NO CARRIER PIPE JOINTS ARE TO BE LOCATED INSIDE OR WITHIN 18" OF THE CASING. FOR CASINGS WHICH REQUIRE CARRIER PIPE JOINTS TO BE LOCATED INSIDE OF THE CASING, SEE CHAPTER 7 DRAWING 23.

DETAIL MAY BE ACCEPTABLE FOR SOME RETAINING WALLS. DESIGNER MUST DETERMINE WIDTH OF "INFLUENCE ZONE" (I).

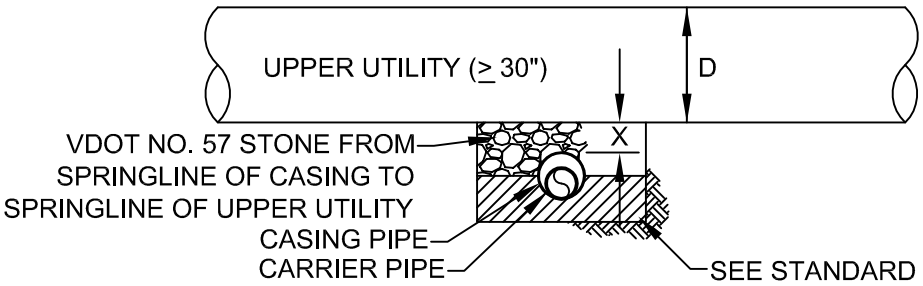

SECTION A-A

NO SCALE

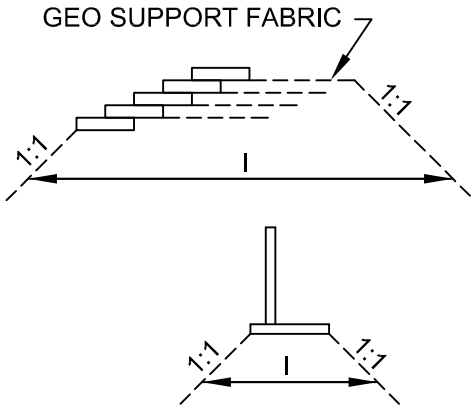

RETAINING WALLS

NO SCALE

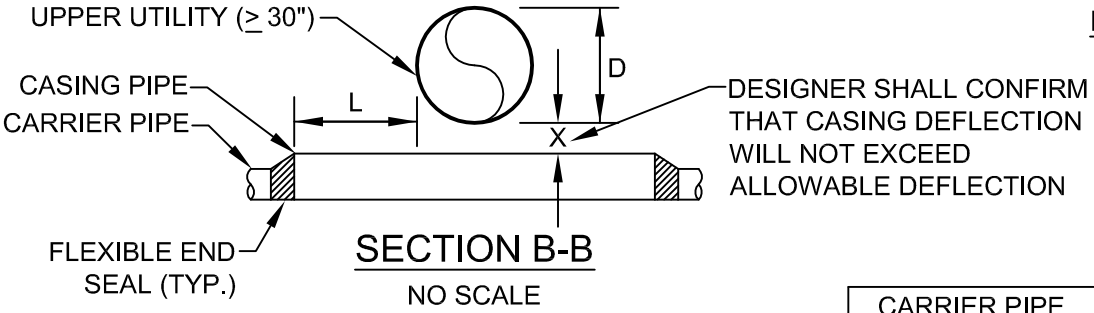

SECTION B-B

NO SCALE

NOTES:

1. D = DIAMETER OF UPPER UTILITY (≥30")
2. X = VERTICAL SEPARATION
3. L = LENGTH OF CASING EXTENSION
4. L = X + D
5. MINIMUM CASING LENGTH = 8'
6. DESIGNER TO SUBMIT STEEL CASING CALCULATIONS PER AWWA M11 UPON REQUEST.
7. DESIGN OF PVC MAINS IN CASINGS SHALL BE IN ACCORDANCE WITH THE UNI-BELL HANDBOOK.
8. CASING DESIGNS SHALL PROVIDE A 20' CLEAR ACCESS AREA TO ALLOW PIPE REMOVAL

CARRIER PIPE SIZE, (IN.)	CASING PIPE SIZE, (IN.)
4	8
6	10
8	12
10	14
12	16

DESIGNS OF CASINGS FOR CARRIER PIPES LARGER THAN 12" SHALL BE SUBMITTED TO THE DIRECTOR FOR REVIEW AND APPROVAL.

NOT TO SCALE

NO.	DATE	DESCRIPTION	INIT.
1.	9/24/04	2004 D&CSM UPDATE	SDC
2.	02/22/06	P.U. MODIFICATIONS	DHG

MODIFIED CASING FOR LARGE UTILITY CROSSINGS

DWG. NO 55

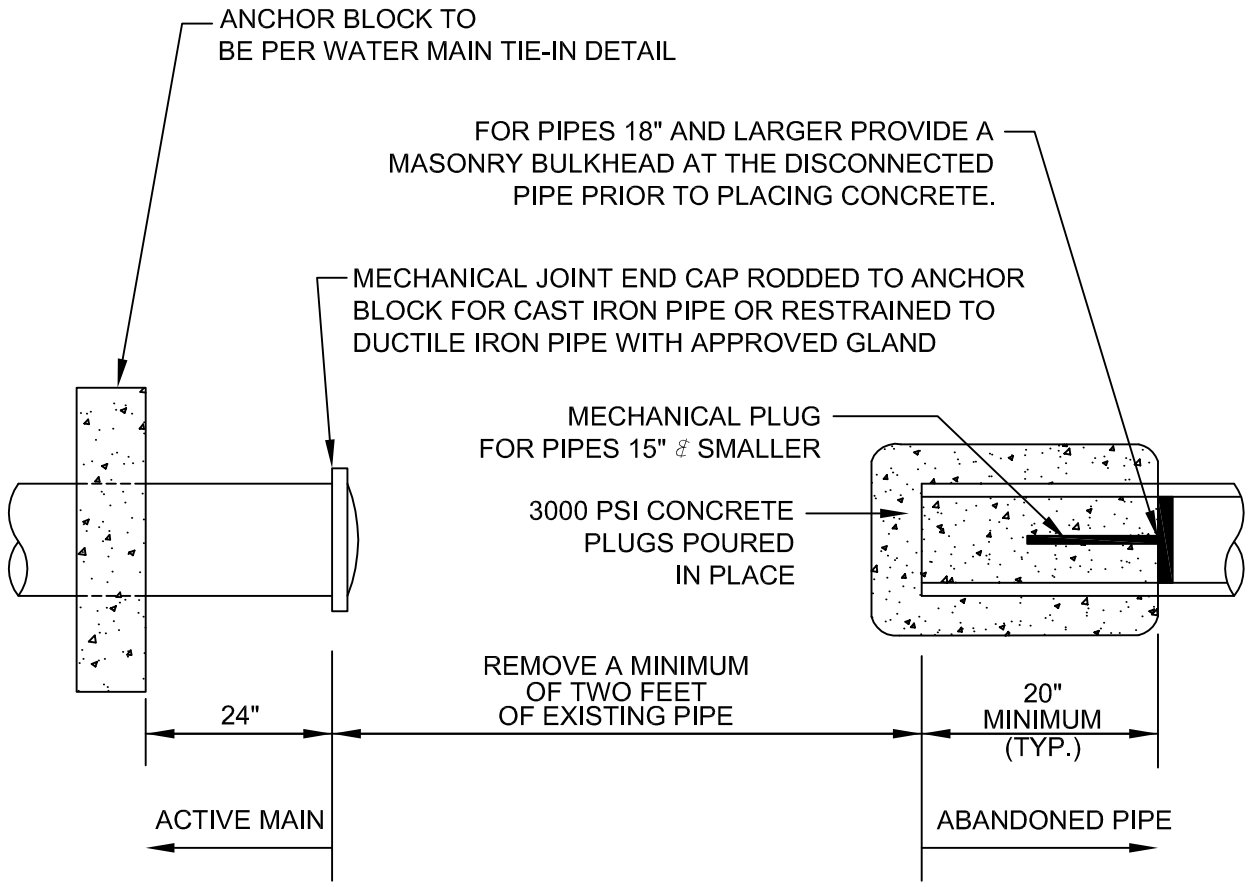

NOTE: IN ALL CASES WHERE A SECTION OF ABANDONED WATER LINE IS TO BE CUT AND REMOVED THE EXPOSED ENDS SHALL BE SEALED PER "ABANDONED PIPE" DETAIL ABOVE.

NOT TO SCALE

NO.	DATE	DESCRIPTION	INIT.
1.	9/24/04	2004 D&CSM UPDATE	SDC

TYPICAL WATERMAIN ABANDONMENT DETAIL

DWG. NO 56

PAGE 70

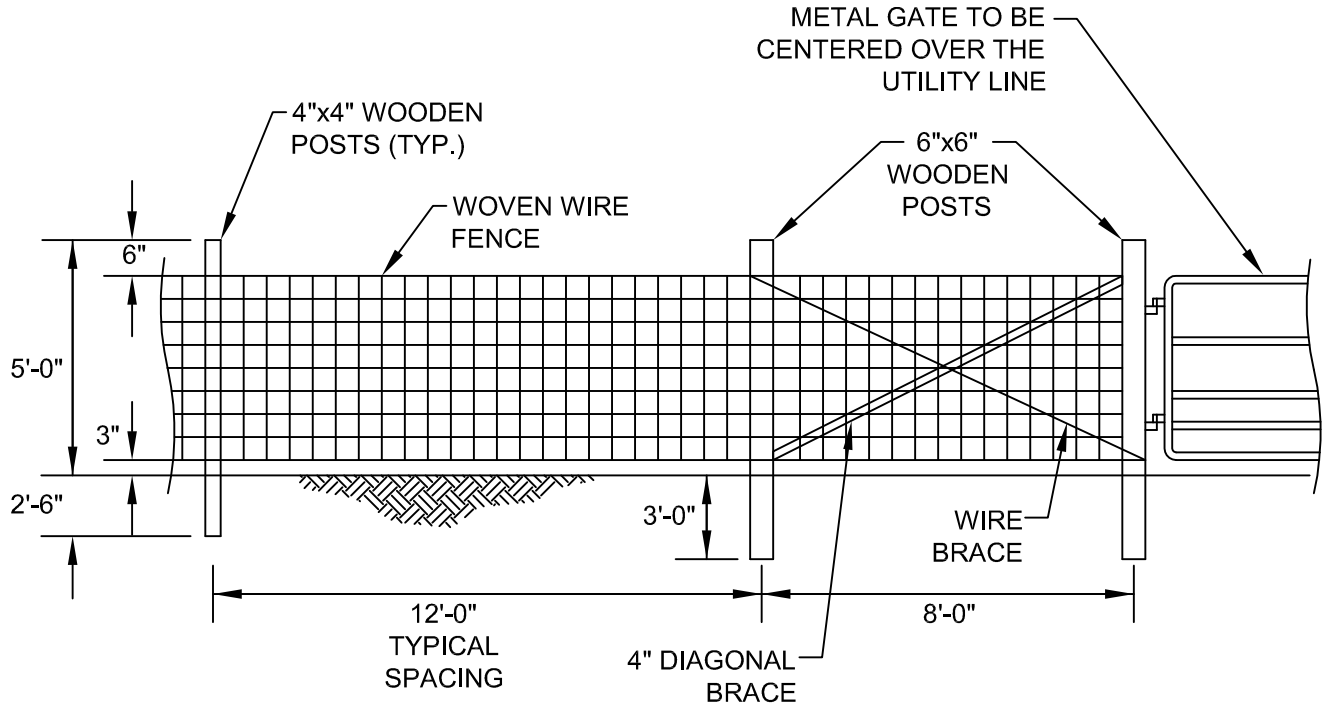

NOTE:

1. FENCE GATE TO BE PROVIDED WHERE FENCES CROSS WATER OR SEWER MAINS AND AS SPECIFIED BY THE DIRECTOR. FENCE GATES SHALL BE CENTERED OVER SUCH UTILITIES FOR ACCESS AND MAINTENANCE.
2. THE BRACE WIRE TO BE PLACED AROUND POSTS WITH ONE WIRE ON EACH SIDE OF BRACE. WIRE TO BE DRAWN TAUT BY TWISTING BETWEEN BRACE AND EACH POST. THIS APPLIES TO ALL BRACE WIRES.
3. DIAGONAL 4" BRACES TO BE PLACED IN DIRECTION OF PULL. POST TO BE NOTCHED FOR DIAGONAL 4" BRACES. ALL 4" DIAGONAL BRACES TO HAVE TWO GALVANIZED 12D NAILS AT EACH END.

NOT TO SCALE

NO.	DATE	DESCRIPTION	INIT.
1.	9/24/04	2004 D&CSM UPDATE	SDC

STANDARD FENCE AND GATE DETAIL

DWG. NO 57

PAGE 71