ALL SYMBOLS INDICATED MAY NOT APPEAR ON THESE CONTRACT DRAWINGS

POWER AND DATA OUTLET LEGEND

- TELEPHONE ROUGH-IN WITH BLANK COVER PLATE AT 18" AFF UON. 1-GANG JUNCTION BOX AND 1-GANG PLASTER RING WITH (1) 3/4" EMPTY CONDUIT STUBBED INTO ACCESSIBLE CEILING SPACE.
- DATA ROUGH-IN WITH BLANK COVER PLATE AT 18" AFF UON. 1-GANG JUNCTION BOX AND 1-GANG PLASTER RING WITH (1) 3/4" EMPTY CONDUIT STUBBED INTO ACCESSIBLE CEILING SPACE.
- 2-TELEPHONE/2-DATA ROUGH-IN WITH BLANK COVER PLATE AT 18" AFF UON. 2-GANG JUNCTION BOX AND 1-GANG PLASTER RING WITH (1) 3/4" EMPTY CONDUIT STUBBED INTO ACCESSIBLE CEILING SPACE.
- RECEPTACLE, SINGLE 125V 20A 2P-3W, GROUNDED, 18" AFF UON
- RECEPTACLE, DUPLEX, 125V 20A 2P-3W, GROUNDED, 18" AFF UON
- CIRCUIT NUMBER
- CIRCUIT# GFCI,C,E DESCRIPTIONS 48" MOUNTING HEIGHT
- RECEPTACLE ON EMERGENCY CIRCUIT
- RECEPTACLE GFCI
- RECEPTACLE, DOUBLE DUPLEX, 125V 20A 2P-3W, GROUNDED, 18" AFF UON
- RECEPTACLE, SINGLE, 250V 20A 2P-3W, GROUNDED, 18"AFF UON
- RECEPTACLE, SPECIAL (NUMBER INDICATES NEMA CONFIGURATION) XX-YX
- DEVIVES MOUNTED IN CEILING
- DEVICES MOUNTED IN FLOOR
- DEVICES MOUNTED AT 48" AFF, UON
- DEVICES MOUNTED AT 8" ABOVE COUNTER TOP, UON
- W CEILING - MOUNTED WIRELESS TRANSMITTER/RECEIVER
- CLOCK OUTLET (WALL OR CEILING MOUNTED), 96" AFF UON
- A GENERAL PURPOSE DUPLEX RECEPTACLE IN FLOOR BOX. IF NOTED "A" INDICATES TYPE AND CONFIGURATION.
- 120 VOLT REEL TYPE RECEPTACLE
- SURFACE MOUNT PLUG MOLD MOUNT AS INDICATED ON DWG
- TV CABLE TV ROUGH-IN WITH TV COVER PLATE AT 18" AFF UON. 1-GANG JUNCTION BOX WITH 3/4" EMPTY CONDUIT STUBBED AFC.
- HM HOSPITAL MONITOR ROUGH-IN WITH TV COVER PLATE AT 18" AFF UON. 1-GANG JUNCTION BOX WITH 3/4" EMPTY CONDUIT STUBBED AFC.
- S SURFACE MOUNTED DEVICE WITH INDUSTRIAL COVER
- D TELEPHONE AND CABLE TV DEMARCATION POINT
- B M ELECTRIC COMPANY METER/BREAKER ASSEMBLY
- EPO EMERGENCY POWER OFF

CIRCUIT DESCRIPTIONS

CIRCUIT LNA - 22 (L)
- LIGHTING
- CIRCUIT NUMBER (22)
- PANEL DESIGNATION

CIRCUIT LNA - 22 (R)
- RECEPTACLE
- CIRCUIT NUMBER (22)
- PANEL DESIGNATION

MISC. LEGEND

- J JUNCTION BOX - MOUNTING HEIGHT AS INDICATED OR AT ASSOCIATED PIECE OF EQUIPMENT
- INTERCOM ROUGH -IN WITH BLANK COVER PLATE AT 54" AFF UON. 1-GANG JUNCTION BOX AND 1-GANG PLASTER RING WITH (1) 3/4" EMPTY CONDUIT STUBBED INTO ACCESSIBLE CEILING SPACE.
- X MOTOR, "X" INDICATES HORSEPOWER
- H HUB LOCATION
- MCS MAIN COMPUTER SERVER LOCATION
- HD DISC SWITCH:
  30/-/3: INDICATES DISC-SIZE 30A/NON-FUSED/3-POLE
  30/20/3: INDICATES DISC-SIZE 30A/20A FUSED/3-POLE
- MOTOR STARTER/FSS DISC AT 48" AFF OR AT ASSOC PIECE OF EQUIP. IN NEMA 1 ENCLOSURE WITH HOA, 2-NO/2-NC AUXILIARY CONTACTS, 120V CONTROL POWER TRANSFORMER, RE/GREEN PILOT LIGHTS ON
  0/-/3: INDICATES NEMA SIZE 0/NON-FUSED/3-POLE
  0/30/20/3: INDICATES NEMA SIZE 0/CLIPSIZE 30A/20A FUSE/3-POLE
- VARIABLE FREQUENCY DRIVE AT 48" AFF OR AT ASSOCIATED EQUIPMENT
- S_{M1} MANUAL MOTOR STARTER, 1P (SQUARE-D TYPE F #FGJ5P OR EQUAL)
- S_{M2} MANUAL MOTOR STARTER, 2P (SQUARE-D TYPE M #MBG1 OR EQUAL)
- S_{M3} MANUAL MOTOR STARTER, 3P (SQUARE-D TYPE M #MBG2 OR EQUAL)
- DPC DEFINITE PURPOSE CONTACTOR (SQUARE-D TYPE DP #DP11 OR EQUAL)
- LC LIGHTING CONTACTOR, ELECTRICALLY HELD, 30A, 4P,277V COIL (SQUARE-D TYPE L #LG40V04 OR EQUAL)
- TC TIME CLOCK, 277VAC CLOCK, 2-SPDT,PHOTO-EYE INPUT (TORK TYPE DGLC SERIES #DGLC-3 OR EQUAL)
- OS OCCUPANCY SENSOR, CEILING MOUNT, 120VAC, 15MIN TD (TORK TYPE PC SERIES #PC10AT OR EQUAL)
- PANELBOARD (FLUSH OR SURFACE MOUNTED)
- SP CEILING MOUNTED PAGING SPEAKER
- #10 BRANCH CIRCUIT WIRING CROSSMARKS AND NUMERALS INDICATE NO. AND SIZE OF CONDUCTORS ASSUME (2) #12 CONDUCTORS PLUS #12 GROUND IN 3/4"C UON.

ALL ABBREVIATIONS INDICATED MAY NOT APPEAR ON THESE CONTRACT DRAWINGS

ELECTRICAL ABBREVIATIONS

&	AND
@	AT
A	AMPERE
AAP	ALARM ANNUNCIATOR
ABV	ABOVE
A/C	AIR-CONDITIONING
AC	ALTERNATING CURRENT
ADD	ADDENDUM
AFC	ABOVE FINISHED CEILING
AFF	ABOVE FINISHED FLOOR (18" UON)
AFG	ABOVE FINISHED GRADE (18" UON)
AIC	AMPERE INTERRUPTING CAPACITY
AL	ALUMINUM
ALT	ALTERNATE
AMP	AMPERE
APROX	APPROXIMATE
ARCH	ARCHITECT/ARCHITECTURAL
AUTO	AUTOMATIC
ARF	ABOVE RAISED FLOOR
ATS	AUTOMATIC TRANSFER SWITCH
AUTO	AUTOMATIC
AUX	AUXILIARY
AWG	AMERICAN WIRE GAUGE
BD	BUS DUCT
BFC	BELOW FINISHED CEILING
BH	BASIN HEATERS
BKBD	BACKBOARD
BLDG	BUILDING
BRF	BELOW RAISED FLOOR
BRK	BREAKER
BSMT	BASEMENT
BTWN	BETWEEN
BULL	BULLETIN
°C	DEGREE CELSIUS
C	CONDUIT
COND,c	CONDUCTOR
CAB	CABINET
CAT	CATEGORY
CBAS	COMPUTERIZED BUILDING AUTOMATION SYSTEM
C/B	CIRCUIT BREAKER
CBL	CABLE
CCTV	CLOSED CIRCUIT TELEVISION
CKT	CIRCUIT
CLG	CEILING
CMT	CONDUIT EMPTY
CO	CONDUIT ONLY
COL	COLUMN
COMB	COMBINATION
COMM	COMMUNICATION
CONC	CONCRETE
CONN	CONNECTION, CONNECTOR OR CONNECT
CONST	CONSTRUCTION
COUNTR	CONTRACTOR
COOR	COORDINATE
CORR	CORRIDOR
CRT	CATHODE RAY TUBE
CT	CURRENT TRANSFORMER/ COOLING TOWER
CTB	COMMUNICATION TERMINAL BOARD
CTC	COMMUNICATION TERMINAL CAB
CTFM	COOLING TOWER FILTRATION MOTOR
CU	COPPER
CUH	CABINET UNIT HEATER
D	DEPTH/DEEP
DB	DIRECT BURIAL
DC	DIRECT CURRENT
DEPT	DEPARTMENT
DET	DETAIL
DETD	DUAL ELEMENT TIME-DELAY
DEMO	DEMOLITION
DIA	DIAMETER
DIAG	DIAGRAM
DIM	DIMENSION
DIR	DIRECT CONNECTION
DISC	DISCONNECT
DIST	DISTRIBUTION
DIV	DIVISION
DN	DOWN
DP	DATA PROCESSING
DPC	DEFINITE PURPOSE CONTACTOR
DS	DISCONNECT SWITCH
DWG	DRAWING
E	EMERGENCY
EA	EACH
EC	ELECTRICAL CONTRACTOR
ELEC	ELECTRIC OR ELECTRICAL
ELEV	ELEVATION OR ELEVATOR
EMH	ELECTRICAL MAIN HOLE
EMT	ELECTRIC METALLIC TUBING-THIN WALL
ENCL	ENCLOSURE
ENT	ELECTRIC NONMETALLIC TUBING
EO	ELECTRIC OUTLET
EPO	EMERGENCY POWER OFF
EQ	EQUAL
EQUIP	EQUIPMENT
(ER)	EXISTING TO BE REMOVED
(ERR)	EXISTING TO BE REMOVED AND RELOCATED
(ERRO)	EXISTING TO BE REMOVED AND RETURNED TO OWNER
(ETR)	EXISTING TO REMAIN
EWC	ELECTRIC WATER COOLER
EWH	ELECTRIC WATER HEATER
EX	EXISTING
EXT	EXTERIOR
°F	DEGREES FAHRENHEIT
FA	FIRE ALARM
FACP	FIRE ALARM CONTROL PANEL
FAAP	FIRE ALARM ANNUNCIATOR PANEL
FARP	FIRE ALARM REMOTE PANEL
FATC	FIRE ALARM TERMINAL CABINET
FBO	FURNISHED BY OTHERS
FDR	FEEDER
FIXT	FIXTURE
FLR	FLOOR
FLEX	FLEXIBLE
FLOUR	FLUORESCENT
FSS	FUSED SAFETY SWITCH
FU	FUSED
FWD	FLEXIBLE WIRING DUCT
GA	GAUGE
GALV	GALVANIZED
GC	GENERAL CONTRACTOR
G.E.C.	GROUNDING ELECTRODE CONNECTOR
GEN	GENERATOR
GFI	GROUND FAULT INTERRUPTER
GFR	GROUND FAULT RELAY
GND,G,g	GROUND
GWA	GENERAL WORK AREA
GWB	GYPSUM WALL BOARD
H	HIGH/HEIGHT
HD	HEAVY DUTY
HID	HIGH INTENSITY DISCHARGE
HOA	HAND OFF AUTO
HORZ	HORIZONTAL
HP	HORSEPOWER
HT	HEIGHT
HTG	HEATING
HTR	HEATER
HV	HIGH VOLTAGE
HVAC	HEATING, VENTILATING, AND AIR CONDITIONING
HW	HEAVY WALL
HZ	HERTZ
IC	INTERRUPTING CAPACITY
I/C	INTERCOM
I/L	INTERLOCK
ID	INSIDE DIAMETER
IG	ISOLATED GROUND
IMC	INTERMEDIATE METAL CONDUIT
JB	JUNCTION BOX
KO	KNOCK OUT
KVA	KILOVOLT-AMPERE
KW	KILOWATTS
LC	LIGHTING CONTACTOR
LCC	LIGHTING CONTROL CABINET
LCP	LIGHTING CONTROL PANEL
LFMC	LIQUIDTIGHT FLEXIBLE METAL CONDUIT
LFNC	LIQUIDTIGHT FLEXIBLE NONMETALLIC CONDUIT
LO	LUGS ONLY
LOC	LOCATION
LTG	LIGHTING, LIGHT OR LIGHTS
LV	LOW VOLTAGE
MAN	MANUAL
MANU	MANUFACTURER
MAINT.	MAINTENANCE
MACH.	MACHINE
MAX	MAXIMUM
MC	MECHANICAL CONTRACTOR
MCB	MAIN CIRCUIT BREAKER
MCC	MOTOR CONTROL CENTER
MCU	MODULAR COOLING UNIT
MECH	MECHANICAL
MET/MON	METERING/MONITORING
MEZZ	MEZZANINE
MGB	MASTER GROUND BAR
MH	MAN HOLE
MIN	MINIMUM
MISC	MISCELLANEOUS
MM	MULTI MODE
MLO	MAIN LUG ONLY
MS	MOTOR STARTER
MSG	MAIN SWITCH GEAR
MSP	MOTOR STARTER PANEL
MSR	MAIN SOUND RACK
MSS	MOTOR STARTER SWITCH
MT	EMPTY
MTD	MOUNTED
MTR	MOTOR
MTS	MANUAL TRANSFER SWITCH
MTR STR	MOTOR STARTER
MV	MEDIUM VOLTAGE
N,NEU	NEUTRAL
NA	NOT APPLICABLE
N.C.	NORMALLY CLOSED
NC	NURSE CALL
N/C	NURSE CALL
NCTC	NURSE CALL TERMINAL CABINET
NEC	NATIONAL ELECTRIC CODE
NEG	NEGATIVE
NF	NON FUSED
NFSS	NON-FUSED SAFETY SWITCH
NIC	NOT IN CONTRACT
NL	NIGHT LIGHT - WIRE ASSOCIATED FIXTURE AHEAD OF LOCAL SWITCHING FOR CONTINUOUS "ON" OPERATION
NO.	NUMBER
N.O.	NORMALLY OPEN
NTS	NOT TO SCALE
#	NUMBER
OC	ON CENTER
OD	OUTSIDE DIAMETER
OFCI	OWNER FURNISHED CONTRACTOR INSTALLED
OFOI	OWNER FURNISHED OWNER INSTALLED
OH	OVERHEAD
OHD	OVERHEAD DOOR
P	POLE
PB	PUSH BUTTON
PCT	PERCENT
PDU	POWER DISTRIBUTION UNIT
PE	PHOTO-EYE
PF	POWER FACTOR
PH	PHASE
PL	PILOT LIGHT
PNL	PANEL
PR	PAIR
PRI	PRIMARY
PS	PULL STATION
PSI	POUNDS PER SQUARE INCH
PSTC	PAGING SYSTEM TERMINAL CABINET
PTSB	PNEUMATIC TUBE SYSTEM BLOWER
PUB	PULL BOX
PVC	POLYVINYL CHLORIDE
PWR	POWER
ø	PHASE
REC,RX	RECEPTACLE
REF	REFRIGERATOR
REQ	REQUIRED
RES	RESISTOR
RGH	RADIANT GAS HEATER
RIF	RADIO INTERFERENCE FILTER
RM	ROOM
RMC	RIGID METAL CONDUIT
RNC	RIGID NONMETALLIC CONDUIT
RR	REMOVE AND RELOCATE
SAF	SAFETY
SCHED	SCHEDULE
SD	SMOKE DETECTOR
SDU	SATELLITE DISTRIBUTION UNIT
SEC	SECONDARY
SECT	SECTION
SEF	SERVICE ENTRANCE FACILITY
SEL	SELECTOR
SF	SUPPLY FAN
SHT	SHEET
SM	SINGLE MODE
SPC	SPACE
SPEC	SPECIFICATION
SPR	SPARE
SQ	SQUARE
SS	SURGE SUPPRESSION
SSW	SAFETY SWITCH
S/S	STAINLESS/STEEL
S-S	STOP-START
STD	STANDARD
STR	STARTER
STRD	STRANDED
STS	STATIC TRANSFER SWITCH
SUB	SUBSTATION
SW	SWITCH
SWBD	SWITCHBOARD
SWGR	SWITCHGEAR
SYS	SYSTEM
TB	TERMINAL BOX
TD	TIME DELAY
TEL	TELEPHONE
TEMP	TEMPERATURE
TERM	TERMINATE-TERMINAL
TH	THROUGH
TR	TELECOMMUNICATION ROOM
TRANSF	TRANSFER
TSP	TWISTED SHIELDED PAIR
TV	TELEVISION
TVSS	TRANSIENT VOLTAGE SURGE SUPPRESSER
TYP	TYPICAL
UC	UNDERCOUNTER
UE	UNDERGROUND ELECTRIC
UF	UNDER FLOOR
UFD	UNDER FLOOR DUCT
UG	UNDER GROUND
UH	UNIT HEATER
UL	UNDERWRITERS LABORATORY
UON	UNLESS OTHERWISE NOTED
UPS	UNINTERRUPTIBLE POWER SUPPLY
UT	UNDERGROUND TELEPHONE
V	VOLT
VA	VOLT AMPERE
VAV	VARIABLE AIR VOLUME BOX
VDT	VIDEO DISPLAY TERMINAL
VERT	VERTICAL
VFD	VARIABLE FREQUENCY DRIVE
VSD	VARIABLE SPEED DRIVE
W	WATTS
WP	WEATHER PROOF
W/	WITH/
W/O	WITH/OUT
XFR	TRANSFORMER
XP	EXPLOSION PROOF
2SP	TWO SPEED STARTER

GENERAL ELECTRICAL NOTES

1. ALL WORK SHALL CONFORM TO THE REGULATIONS OF APPLICABLE FEDERAL, STATE, AND LOCAL LAWS, ORDINANCES AND CODES. ELECTRICAL WORK SHALL BE PERFORMED IN ACCORDANCE WITH THE LATEST ADOPTED INTERNATIONAL BUILDING CODE AND NATIONAL ELECTRICAL CODE (NFPA 70).
2. ALL WIRE SIZES SHOWN ARE #12 THHN COPPER STRANDED (UON).
3. ALL CONDUIT IS 3/4" EMT (UON).
4. VERIFY LOCATION, VOLTAGE, PHASE, AND CURRENT REQUIREMENTS OF ALL EQUIPMENT TO INSURE PROPER CONNECTIONS. PROVIDE DISCONNECTS AS SHOWN AND AS REQUIRED BY THE NEC.
5. FOR ALL RECEPTACLE CIRCUITS, PROVIDE DEDICATED NEUTRALS. SHARED NEUTRALS WILL BE PERMITTED FOR LIGHTING CIRCUITS ONLY.
6. SUBMITTALS
   A. GENERAL: THE CONTRACTOR SHALL SUBMIT INFORMATION TO THE OWNER DEMONSTRATING COMPLIANCE OF PRODUCTS AND INSTALLATION OF DRAWINGS AND SPECIFICATIONS. THIS INFORMATION SHALL INCLUDE BUT NOT BE LIMITED TO: CATALOG DATA, PERFORMANCE DATA, FAN CURVES, PUMP CURVES, ELECTRICAL REQUIREMENTS AND RECOMMENDED CLEARANCES.
   B. RESUBMISSION: CONTRACTOR SHALL CHANGE OR CORRECT SUBMITTALS AS REQUIRED BY THE OWNER AND RESUBMIT UNTIL APPROVED. THE CONTRACTOR SHALL ALSO INDICATE ANY CHANGES WHICH HAVE BEEN MADE OTHER THAN THOSE REQUESTED BY THE OWNER.
   C. CONTRACTOR SHALL PROVIDE SUBMITTAL BINDERS COMPLETE WITH AN INDEX AND NUMBERED TABS FOR EACH SUBMITTAL REQUIRED BY THE PROJECT CONSTRUCTION DOCUMENTS. BINDERS SHALL BE 3-RING AND LARGE ENOUGH TO HOLD ALL ELECTRICAL PROJECT SUBMITTALS. PROVIDE MULTIPLE BINDERS IF VOLUME OF SUBMITTALS REQUIRES MORE THAN ONE BINDER. PROVIDE AN ALPHABETIZED INDEX THE FRONT OF EACH BINDER, WITH EACH SUBMITTAL ENTRY ASSIGNED A TAB NUMBER. CONTRACTOR SHALL PROVIDE A TOTAL OF THREE COMPLETE SUBMITTAL BINDERS (ONE FOR THE OWNER, ONE FOR THE ENGINEER, AND ONE FOR THE ARCHITECT). SUBMITTAL BINDERS SHALL BE PROVIDED PRIOR TO OR WITH THE FIRST SUBMITTAL.
7. THE DRAWINGS ILLUSTRATE GENERAL SCOPE AND ARRANGEMENT OF ELECTRICAL SYSTEMS. THEY SHALL BE FOLLOWED AS CLOSELY AS ACTUAL CONDITIONS ALLOW.
8. CONTRACTOR SHALL IDENTIFY AND COORDINATE WITH THE OWNER ALL WORK AREAS REQUIRING CONSTRUCTION EFFORTS DURING "OFF" HOURS. "OFF" HOUR WORK SHALL BE INCLUDED IN THE CONTRACTOR BID/SCOPE OF WORK.

HDPT BLOCK HEATER RECEPTACLES
HARRISONBURG, VA

VALLEY | ENGINEERING
IDEAS MADE REAL
3231 PEOPLES DRIVE
HARRISONBURG, VIRGINIA 22801
TELEPHONE (540) 434-6365 OR (800) 343-6365
FAX (540) 432-0685
www.valleyengr.com

COPYRIGHT HELD BY VALLEY ENGINEERING, P.C. ALL RIGHTS RESERVED. THESE DRAWINGS MAY NOT BE REPRODUCED IN ANY FORM WITHOUT WRITTEN CONSENT FROM VALLEY ENGINEERING, P.C.

COMMONWEALTH OF VIRGINIA
JERRY D. HEAVNER
Lic. No. 039799
06/12/2015
PROFESSIONAL ENGINEER

BID/PERMIT ISSUE

REVISIONS:
1 REVISION #1 06/12/2015

DATE: 11-26-2014
PROJECT NO: 10472-8
EXP./CLIENT NO:
SCALE: NTS

ELECTRICAL LEGENDS, ABBREVIATIONS AND NOTES

SHEET NO.: ENTIRE SHEET
E0.01

DISTRIBUTION BOARD SCHEDULE

Panel ID: **MDP**
Location: RESERVOIR EMBANKMENT
Voltage: 120/240
NEW

Bus Type: **COPPER**
Service: **1 PHASE, 3 WIRE**
Interrupting Rating: **22 KAIC**
Mains: 400A MLO
NEMA-3R RAINTIGHT

ACCESSORY:	
AM	AMMETER
VM	VOLT METER
DM	DIGITAL METERING
GF	GROUND FAULT PROTECTION
SST	SOLID STATE TRIP DEVICE
ST	SHUNT TRIP

#	POLE	PROTECTIVE DEVICE FRAME	TRIP	ACCESSORY	Load kVA	ITEM SERVED
1	3	200	125	-	20.0	PANEL A
2	3	200	175	-	32.0	PANEL B
3	3	200	125	-	20.0	PANEL C
4	1	20	20	-	0.5	CONTROL CKT (TIME CLOCK)
5	1	20	20	-	1.0	RECEPTACLES/CAMERAS
6	3	X	X	-	0.0	SPACE
x	x	x	x	x	x	x
				Total KVA:	**73.5**	
				Total AMPS:	**306.3**	

GENERAL NOTES:
1) BASIS OF DESIGN: SQUARE D
2) SEE RISER DIAGRAM FOR FEEDER SIZES.
3) ALL OCPD DEVICES ARE BASED ON CIRCUIT BREAKERS UNLESS OTHERWISE NOTED.
4) THIS PANELBOARD IS LIMITED TO SIX (6) MAINS
5)
6)

SINGLE PHASE PANEL SCHEDULE

Panel ID: **PANEL A** NEW NORMAL
Location: RESERVOIR AREA EXTERIOR
Mounting: SURFACE
Neutral: SOLID
Voltage: 120/240, 1PH
Service: **1 PHASE, 3 WIRE**
Mains: 125A BREAKER
AIC: 22,000

Load Description	kVA	Wire Size	Cond	Brk	P	Ckt	A	B	Ckt	P	Brk	Cond	Wire Size	kVA	Load Description
BLOCK HEATER CIRCUIT #1	1.0	10	3/4	20	1	1	**2.0**		2	1	20	1 1/4	8	1.0	BLOCK HEATER CIRCUIT #13
BLOCK HEATER CIRCUIT #2	1.0	10	3/4	20	1	3		**2.0**	4	1	20	1 1/4	8	1.0	BLOCK HEATER CIRCUIT #14
BLOCK HEATER CIRCUIT #3	1.0	10	3/4	20	1	5	**2.0**		6	1	20	1 1/4	8	1.0	BLOCK HEATER CIRCUIT #15
BLOCK HEATER CIRCUIT #4	1.0	10	3/4	20	1	7		**2.0**	8	1	20	1 1/4	8	1.0	BLOCK HEATER CIRCUIT #16
BLOCK HEATER CIRCUIT #5	1.0	10	3/4	20	1	9	**2.0**		10	1	20	1 1/4	6	1.0	BLOCK HEATER CIRCUIT #17
BLOCK HEATER CIRCUIT #6	1.0	10	3/4	20	1	11		**2.0**	12	1	20	1 1/4	6	1.0	BLOCK HEATER CIRCUIT #18
BLOCK HEATER CIRCUIT #7	1.0	10	3/4	20	1	13	**2.0**		14	1	20	1 1/4	6	1.0	BLOCK HEATER CIRCUIT #19
BLOCK HEATER CIRCUIT #8	1.0	10	3/4	20	1	15		**2.0**	16	1	20	1 1/4	6	1.0	BLOCK HEATER CIRCUIT #20
BLOCK HEATER CIRCUIT #9	1.0	8	1 1/4	20	1	17	**1.0**		18	1	X	X	X	0.0	SPACE
BLOCK HEATER CIRCUIT #10	1.0	8	1 1/4	20	1	19		**1.0**	20	1	X	X	X	0.0	SPACE
BLOCK HEATER CIRCUIT #11	1.0	8	1 1/4	20	1	21	**1.0**		22	1	X	X	X	0.0	SPACE
BLOCK HEATER CIRCUIT #12	1.0	8	1 1/4	20	1	23		**1.0**	24	1	X	X	X	0.0	SPACE
SPACE	0.0	X	X	X	1	25	**0.0**		26	1	X	X	X	0.0	SPACE
SPACE	0.0	X	X	X	1	27		**0.0**	28	1	X	X	X	0.0	SPACE
SPACE	0.0	X	X	X	1	29	**0.0**		30	1	X	X	X	0.0	SPACE
SPACE	0.0	X	X	X	1	31		**0.0**	32	1	X	X	X	0.0	SPACE
TOTAL LOAD PER PHASE (kW)=							**10.0**	**10.0**							
LOAD PER PHASE IN AMPERES=							**83.3**	**83.3**							

Notes:
1. PROVIDE PANEL WITH INPUT CONTACTOR CONTROLLED BY TIME CLOCK.
2. PROVIDE 120 VOLT COIL ON INPUT CONTACTOR.
3. PROVIDE NEMA-3R WEATHERPROOF ENCLOSURE

SINGLE PHASE PANEL SCHEDULE

Panel ID: **PANEL B** NEW NORMAL
Location: RESERVOIR AREA EXTERIOR
Mounting: SURFACE
Neutral: SOLID
Voltage: 120/240, 1PH
Service: **1 PHASE, 3 WIRE**
Mains: 175A BREAKER
AIC: 22,000

Load Description	kVA	Wire Size	Cond	Brk	P	Ckt	A	B	Ckt	P	Brk	Cond	Wire Size	kVA	Load Description
BLOCK HEATER CIRCUIT #21	1.0	10	3/4	20	1	1	**2.0**		2	1	20	1 1/4	6	1.0	BLOCK HEATER CIRCUIT #37
BLOCK HEATER CIRCUIT #22	1.0	10	3/4	20	1	3		**2.0**	4	1	20	1 1/4	6	1.0	BLOCK HEATER CIRCUIT #38
BLOCK HEATER CIRCUIT #23	1.0	10	3/4	20	1	5	**2.0**		6	1	20	1 1/4	6	1.0	BLOCK HEATER CIRCUIT #39
BLOCK HEATER CIRCUIT #24	1.0	10	3/4	20	1	7		**2.0**	8	1	20	1 1/4	6	1.0	BLOCK HEATER CIRCUIT #40
BLOCK HEATER CIRCUIT #25	1.0	10	3/4	20	1	9	**2.0**		10	1	20	1 1/4	6	1.0	BLOCK HEATER CIRCUIT #41
BLOCK HEATER CIRCUIT #26	1.0	10	3/4	20	1	11		**2.0**	12	1	20	1 1/4	6	1.0	BLOCK HEATER CIRCUIT #42
BLOCK HEATER CIRCUIT #27	1.0	10	3/4	20	1	13	**2.0**		14	1	20	1 1/4	6	1.0	BLOCK HEATER CIRCUIT #43
BLOCK HEATER CIRCUIT #28	1.0	10	3/4	20	1	15		**2.0**	16	1	20	1 1/4	6	1.0	BLOCK HEATER CIRCUIT #44
BLOCK HEATER CIRCUIT #28	1.0	8	1	20	1	17	**2.0**		18	1	20	1 1/4	6	1.0	BLOCK HEATER CIRCUIT #45
BLOCK HEATER CIRCUIT #30	1.0	8	1	20	1	19		**2.0**	20	1	20	1 1/4	6	1.0	BLOCK HEATER CIRCUIT #46
BLOCK HEATER CIRCUIT #31	1.0	8	1	20	1	21	**2.0**		22	1	20	1 1/4	6	1.0	BLOCK HEATER CIRCUIT #47
BLOCK HEATER CIRCUIT #32	1.0	8	1	20	1	23		**2.0**	24	1	20	1 1/4	6	1.0	BLOCK HEATER CIRCUIT #48
BLOCK HEATER CIRCUIT #33	1.0	8	1	20	1	25	**2.0**		26	1	20	1 1/4	6	1.0	BLOCK HEATER CIRCUIT #49
BLOCK HEATER CIRCUIT #34	1.0	8	1	20	1	27		**2.0**	28	1	20	1 1/4	6	1.0	BLOCK HEATER CIRCUIT #50
BLOCK HEATER CIRCUIT #35	1.0	8	1	20	1	29	**2.0**		30	1	20	1 1/4	6	1.0	BLOCK HEATER CIRCUIT #51
BLOCK HEATER CIRCUIT #36	1.0	8	1	20	1	31		**2.0**	32	1	20	1 1/4	6	1.0	BLOCK HEATER CIRCUIT #52
TOTAL LOAD PER PHASE (kW)=							**16.0**	**16.0**							
LOAD PER PHASE IN AMPERES=							**133.3**	**133.3**							

Notes:
1. PROVIDE PANEL WITH INPUT CONTACTOR CONTROLLED BY TIME CLOCK.
2. PROVIDE 120 VOLT COIL ON INPUT CONTACTOR.
3. PROVIDE NEMA-3R WEATHERPROOF ENCLOSURE

SINGLE PHASE PANEL SCHEDULE

Panel ID: **PANEL C** NEW NORMAL
Location: RESERVOIR AREA EXTERIOR
Mounting: SURFACE
Neutral: SOLID
Voltage: 120/240, 1PH
Service: **1 PHASE, 3 WIRE**
Mains: 125A BREAKER
AIC: 22,000

Load Description	kVA	Wire Size	Cond	Brk	P	Ckt	A	B	Ckt	P	Brk	Cond	Wire Size	kVA	Load Description
BLOCK HEATER CIRCUIT #53	1.0	10	3/4	20	1	1	**2.0**		2	1	20	1	8	1.0	BLOCK HEATER CIRCUIT #63
BLOCK HEATER CIRCUIT #54	1.0	10	3/4	20	1	3		**2.0**	4	1	20	1	8	1.0	BLOCK HEATER CIRCUIT #64
BLOCK HEATER CIRCUIT #55	1.0	10	3/4	20	1	5	**2.0**		6	1	20	1	8	1.0	BLOCK HEATER CIRCUIT #65
BLOCK HEATER CIRCUIT #56	1.0	10	3/4	20	1	7		**2.0**	8	1	20	1	8	1.0	BLOCK HEATER CIRCUIT #66
BLOCK HEATER CIRCUIT #57	1.0	10	3/4	20	1	9	**2.0**		10	1	20	1	8	1.0	BLOCK HEATER CIRCUIT #67
BLOCK HEATER CIRCUIT #58	1.0	10	3/4	20	1	11		**2.0**	12	1	20	1	8	1.0	BLOCK HEATER CIRCUIT #68
BLOCK HEATER CIRCUIT #59	1.0	10	3/4	20	1	13	**2.0**		14	1	20	1 1/4	6	1.0	BLOCK HEATER CIRCUIT #69
BLOCK HEATER CIRCUIT #60	1.0	10	3/4	20	1	15		**2.0**	16	1	20	1 1/4	6	1.0	BLOCK HEATER CIRCUIT #70
BLOCK HEATER CIRCUIT #61	1.0	8	1	20	1	17	**2.0**		18	1	20	1 1/4	6	1.0	BLOCK HEATER CIRCUIT #71
BLOCK HEATER CIRCUIT #62	1.0	8	1	20	1	19		**2.0**	20	1	20	1 1/4	6	1.0	BLOCK HEATER CIRCUIT #72
SPACE	0.0	X	X	X	1	21	**0.0**		22	1	X	X	X	0.0	SPACE
SPACE	0.0	X	X	X	1	23		**0.0**	24	1	X	X	X	0.0	SPACE
SPACE	0.0	X	X	X	1	25	**0.0**		26	1	X	X	X	0.0	SPACE
SPACE	0.0	X	X	X	1	27		**0.0**	28	1	X	X	X	0.0	SPACE
SPACE	0.0	X	X	X	1	29	**0.0**		30	X	X	X	X	0.0	SPACE
SPACE	0.0	X	X	X	1	31		**0.0**	32	X	X	X	X	0.0	SPACE
TOTAL LOAD PER PHASE (kW)=							**10.0**	**10.0**							
LOAD PER PHASE IN AMPERES=							**83.3**	**83.3**							

Notes:
1. PROVIDE PANEL WITH INPUT CONTACTOR CONTROLLED BY TIME CLOCK.
2. PROVIDE 120 VOLT COIL ON INPUT CONTACTOR.
3. PROVIDE NEMA-3R WEATHERPROOF ENCLOSURE

HDPT BLOCK HEATER RECEPTACLES
HARRISONBURG, VA

VALLEY | ENGINEERING
IDEAS MADE REAL
3231 PEOPLES DRIVE
HARRISONBURG, VIRGINIA 22801
TELEPHONE (540) 434-6365 OR (800) 343-6365
FAX (540) 432-0685
www.valleyengin.com

COPYRIGHT HELD BY VALLEY ENGINEERING, PLC. ALL RIGHTS RESERVED. THESE DRAWINGS MAY NOT BE REPRODUCED IN ANY FORM WITHOUT WRITTEN CONSENT FROM VALLEY ENGINEERING, PLC.

COMMONWEALTH OF VIRGINIA
JERRY D. HEAVNER
Lic. No. 039799
06/12/2015
PROFESSIONAL ENGINEER

BID/PERMIT ISSUE

REVISIONS:
1 REVISION #1 06/12/2015

DATE: 11-26-2014
PROJECT NO: 10472-8
EXP./CLIENT NO:
SCALE: NTS

ELECTRICAL SCHEDULES

SHEET NO.: ENTIRE SHEET
E0.02

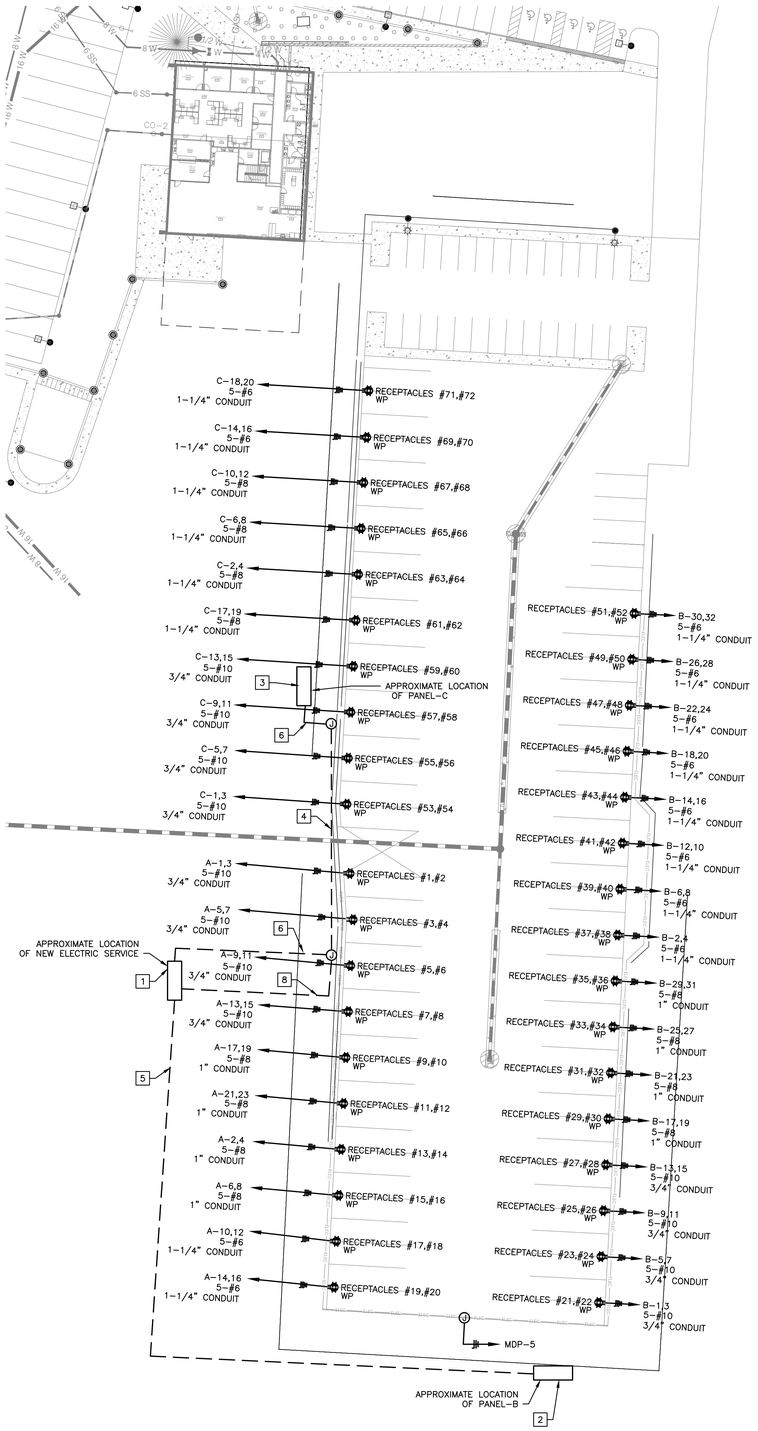

ELECTRICAL SITE PLAN

SCALE: 1/32" = 1'-0"

☐ CONSTRUCTION NOTES

1. APPROXIMATE LOCATION OF NEW ELECTRIC SERVICE AND PANEL BOARDS. THE SERVICE WILL BE BUILT ABOVE THE OLD RESERVOIR EMBANKMENT ON THE HILL ABOVE. COORDINATE EXACT LOCATION WITH HARRISONBURG ELECTRIC COMMISSION AND HDPT.
2. APPROXIMATE LOCATION OF PANEL-B, LOCATED ON TOP OF RESERVOIR EMBANKMENT.
3. APPROXIMATE LOCATION OF PANEL-C, LOCATED ON TOP OF RESERVOIR EMBANKMENT.
4. DEMOLISH WIRING OUT OF EXISTING 1-1/4" CONDUIT. RE-CONNECT AND RE-USE 1-1/4" CONDUIT FOR NEW FEEDER CONDUIT TO PANEL C.
5. TRENCH CONDUIT AND BACKFILL.
6. PROVIDE NEW CONDUIT FROM PANEL TO JUNCTION BOX.
7. RECEPTACLE/CAMERA CIRCUIT TO BE RECONNECTED TO PANEL MDP-5.
8. RUN 3/4" CONDUIT FROM MDP TO J-BOX FOR RECONNECTION OF EXISTING RECEPTACLE/CAMERA CIRCUIT. CONNECT TO MDP-5.

GENERAL NOTES

1. REFER TO HDPT ADMINISTRATION AND MAINTENANCE FACILITY PROJECT SPECIFICATIONS FOR GENERAL SPECIFICATIONS.
2. RECEPTACLES SHALL BE MOUNTED AND INSTALLED PER DETAILS A AND D ON SHEET E6.02, DEPENDING ON THE LOCATION.
3. CONTRACTORS ARE REQUIRED TO ATTEND A MANDATORY SITE VISIT BEFORE SUBMITTING THE BID.
4. RUN BRANCH CIRCUIT CONDUITS ON TOP OF RESERVOIR EMBANKMENT WALL WHERE POSSIBLE.

HDPT BLOCK HEATER RECEPTACLES

HARRISONBURG, VA

VALLEY | ENGINEERING
IDEAS MADE REAL
3231 PEOPLES DRIVE
HARRISONBURG, VIRGINIA 22801
TELEPHONE (540) 434-6365 OR (800) 343-6365
FAX (540) 432-0685
www.valleyengineering.com

COPYRIGHT HELD BY VALLEY ENGINEERING, PLC. ALL RIGHTS RESERVED. THESE DRAWINGS MAY NOT BE REPRODUCED IN ANY FORM WITHOUT WRITTEN CONSENT FROM VALLEY ENGINEERING, PLC.

COMMONWEALTH OF VIRGINIA
JERRY D. HEAVNER
Lic. No. 039799
06/12/2015
PROFESSIONAL ENGINEER

BID/PERMIT ISSUE

REVISIONS:
1 REVISION #1 06/12/2015

DATE: 11-26-2014
PROJECT NO: 10472-8
EXP./CLIENT NO:
SCALE: NTS

ELECTRICAL SITE PLAN

SHEET NO.: ENTIRE SHEET
E6.01

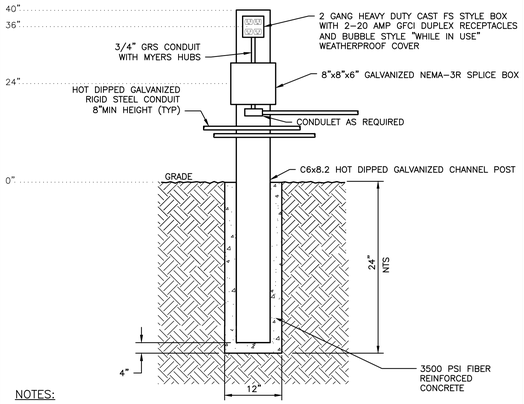

NOTES:

1. PROVIDE #12 CONDUCTORS FROM SPLICE BOX TO RECEPTACLES.

A E6.02 **BLOCK HEATER RECEPTACLE MOUNTING DETAIL (NO FENCE)**
NOT TO SCALE

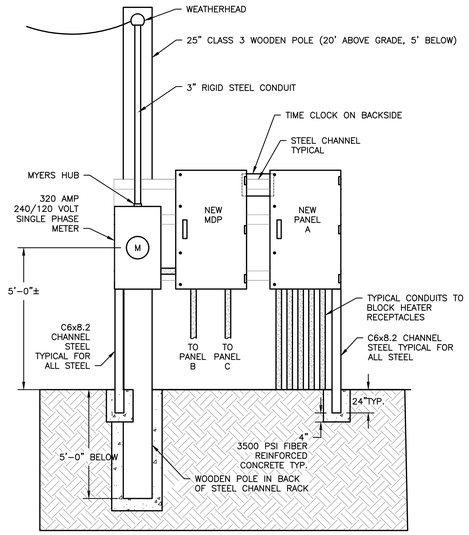

B E6.02 **SERVICE ELEVATION**
NOT TO SCALE

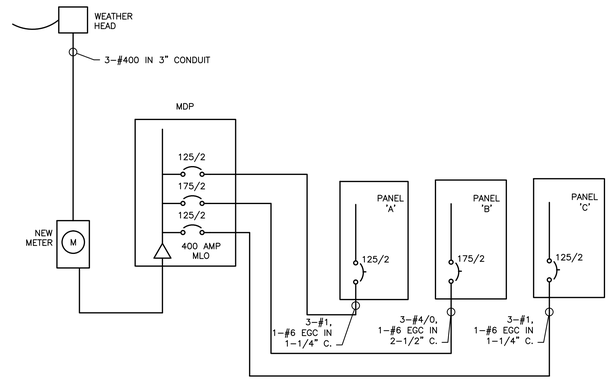

NOTE: PROVIDE 3#10 THHN/THWN STRANDED CONDUCTORS IN EACH FEEDER CONDUIT WITH FEEDER CONDUCTORS FOR CONTROL OF CONTACTOR (FROM TIME CLOCK)

C E6.02 **RISER DETAIL**
NOT TO SCALE

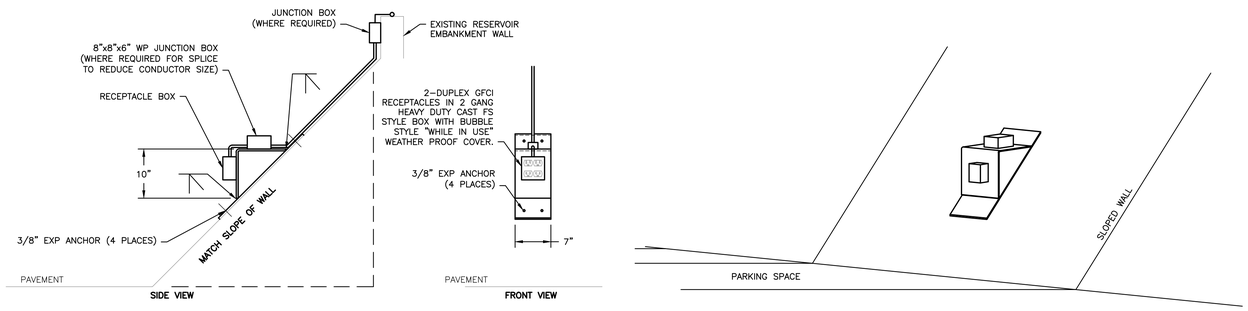

NOTES:

1. MATERIAL IS 3/8" PLATE STEEL, HOT DIPPED GALVANIZED.
2. BRACKET TO BE CREATED PER ACTUAL SLOPE OF WALL.

D E6.02 **SLOPED WALL RECEPTACLE BRACKET DETAIL**
NOT TO SCALE

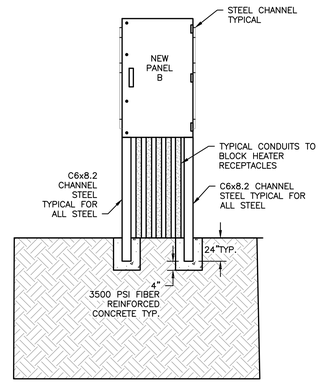

E E6.02 **PANEL B ELEVATION (PANEL C SIMILAR)**
NOT TO SCALE

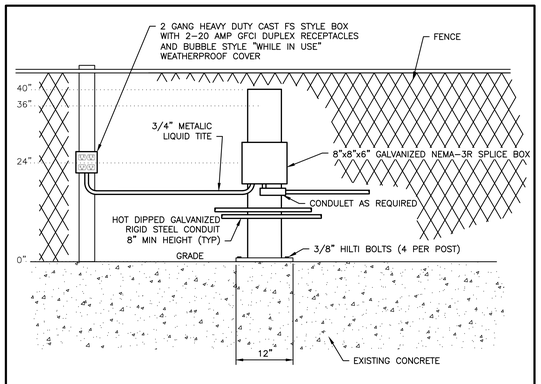

NOTES:

1. PROVIDE #12 CONDUCTORS FROM SPLICE BOX TO RECEPTACLES.

F E6.02 **BLOCK HEATER RECEPTACLE MOUNTING DETAIL (AT FENCE)**
NOT TO SCALE

HDPT BLOCK HEATER RECEPTACLES

HARRISONBURG, VA

VALLEY | ENGINEERING
IDEAS MADE REAL
3231 PEOPLES DRIVE
HARRISONBURG, VIRGINIA 22801
TELEPHONE (540) 434-6365 OR (800) 343-6365
FAX (540) 432-0683
www.valleyengr.com

COPYRIGHT HELD BY VALLEY ENGINEERING, P.C. ALL RIGHTS RESERVED. THESE DRAWINGS MAY NOT BE REPRODUCED IN ANY FORM WITHOUT WRITTEN CONSENT FROM VALLEY ENGINEERING, P.C.

COMMONWEALTH OF VIRGINIA
JERRY D. HEAVNER
Lic. No. 039799
06/12/2015
PROFESSIONAL ENGINEER

BID/PERMIT ISSUE

REVISIONS:
1 REVISION #1 06/12/2015

DATE: 11-26-2014
PROJECT NO: 10472-8
EXP./CLIENT NO:
SCALE: NTS

ELECTRICAL ELEVATIONS AND DETAILS

SHEET NO.: ENTIRE SHEET
E6.02