ADDENDUM #1
RFP NUMBER: 2014015-PU-P
North River Pump Station VFD & Electrical Gear RFP
PROJECT 473-12-13
CONTRACT 2

DATE: December 20, 2013

TO: All Potential Proposers

City of Harrisonburg's North River Pump Station VFD & Electrical Gear RFP (2014015-PU-P), is modified as follows:

Site Meeting and Pre-Bid Questions:

Q1: The requirements on the vertical motor: The specification calls out flood lube bearing and flood lube system. Until we run the design we are not sure this will be needed. The pictures provided we did not see and any indications of the system on the existing motors.
R1: Oil cooled bearings are required for the new motors.

Q2: There is also the requirements of a water cooled bearing with supply from city water system. We also did not see this on the photos they provided.
R2: Bearing oil will be circulated through a heat exchanger cooled by City water supply, refer to proposed installation drawings attached.

Q3: They are requesting an additional cooling fan / Blower on these motors. We have no indication the motor speed range only the motor will be used on a VFD. We would like to have the speed torque curve on the motors and the thrust value the motor will need to handle. It will allow us the properly provided and motor based on this data to offer a motor that will perform in this application.
R3: External motor cooling fan must be sized to cool motor under full load at manufacturer's minimum specified operating speed.

Q4: There is also redolence in the monitoring requirements on the motor. The winding are shown to need winding RTD, Thermistor, and Thermostats. All three are used on the winding. RTD will provide real time temperature of the winding on all three phases, A thermostat will only open and close at 145C and the thermostat will provided a surge in resistance at a certain temperature. Not sure why all three. Most VDF will work of off RTD"s and usually has the as a standard capability.
R4: The motor spec was written for a motor with normal input power and control from a VFD that will use RTD inputs. The VFD also has a manual bypass circuit which will require the thermistors and thermostats for protection while in that mode of operation. Please provide all three temperature control means with the motor.

Q5: There is a request for vibration monitoring at three points on the bracket. We need to know if they would like transducer or vibration switch. We will need to know the output signal they would like and the supply voltage 24 volt DC or 120 volts for the devices. Is there any one they would like us to provide?
R5: Vibration sensor voltage shall match other motor sensors for common voltage, no specific sensor manufacturer is specified, sensors should be as recommended by motor manufacturer (IMI sensors is a typical OEM vendor).

Q6: Insulated bearing are fine but a shaft grounding ring on a vertical is not very common. Our motor comes with a grounding lug in the main terminal box but we would recommend additional grounding on the frame as well.
R6: The specified insulation bearings will block the path of electrical harmonic and carrier frequencies from the drive that are induced on the shaft from the windings. The shaft grounding ring is intended to provide that path to reduce electrical stress across the bearing insulation as well as additional electrical safety to personnel.

Q7: The Efficiency of the motor will fall to the efficiency of the VFD so there is no way to guarantee the efficiency of the motor on a VFD.
R7: The motor for this application may be operated in a bypass mode and is specified to provide premium efficiency during operation independent of the drive.

Q8: The current 350 HP motor that is in place do we know what the BD dimension is to match up and any information on the pump Jack shaft.
R8: Please refer to Page A-2 of the proposal which provides all available dimensions for the existing motors.

Q9: The ceramic insulate bearing are not available for the thrust bearing and can only be installed on the guide bearing. We will insulate the thrust bearing.
R9: Provide ceramic insulated bearings as specified. An insulating the thrust bearing is acceptable.

Q10: Bearing life cannot meet the L-10 of 250,000 service hours Normal L-10 Life is based on the bearing in the motor and thrust requirement. The 250,000 hour requirement exceeds the bearing manufacture guide line as well.
R10: Providers should include a premium bearing product with the longest L-10 life offered up to 250,000 service hours.

Q11: I am writing concerning the North River Pump Station VFD & Electrical Gear, (RFP 2014015-PU-P). Per the RFP Item number 7, (Instructions for Preparing and Submitting Proposals), I am respectfully requesting that Fuji Electric be listed under an addendum as one of the manufactures list as the “basis-of-design” in 4. SPECIFICATIONS, C. I understand you may not be familiar with Fuji but we manufacture the VFDs for TECOWestinghouse and our engineering and support staff for the Americas is located in Roanoke, VA. If you require additional information, I would be more than happy to visit your facilities and provide an over view of our capabilities. Please feel free to give me a call with any questions.
R11: Basis-of-Design Providers listed in the RFP are listed as indicative of manufacturer’s that were known to provide products in the market. Equivalent products meeting project specifications will be considered in technical evaluation of the proposals.

Q12: There are several statements concerning supplying a bypass in the specification but they are followed with “if specified” or “if used” or “as shown on the drawings”. Is there a requirement for a bypass and if so do you want a soft-start bypass due to the size of the motors?

R12: Each VFD unit shall be equipped with across the line bypass capabilities configured to enable operation of the pump motor at full speed using a manual bypass control to ensure pump operability in the event of a fault with the VFD controls. This bypass shall have output controls contact acknowledging bypass switch setting (i.e. switch status reporting).

Q13: Also, with the preliminary installation drawings being released in an addendum, do they include any control diagrams?
R13: Preliminary motor and VFD installation drawings are attached to this addendum for coordination purposes.

Attachments: Preliminary Pump Station Design Drawings

End of Addendum No. 1

All other requirements, terms and conditions of the RFP remain unchanged.

Addendum page must be signed and returned with your proposal to acknowledge receipt of this addendum.

_____
Authorized Signature

By: Pat Hilliard, CPPB
Purchasing Agent

CITY OF HARRISONBURG

NORTH RIVER PUMP STATION UPGRADE 2013
PROJECT #473-12-13

BRIDGEWATER, VIRGINIA

DECEMBER 13, 2013

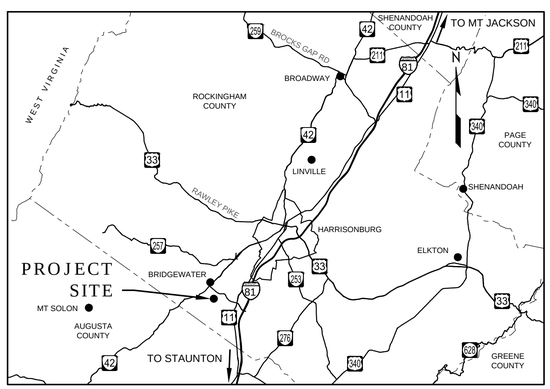

VICINITY MAP

NOT TO SCALE

LIST OF DRAWINGS

SHEET NO.	SHEET TITLE
G-001	COVER SHEET
C-001	EXISTING SITE PLAN
C-101	SITE PLAN
D-101	PUMP STATION INTERIOR PLAN
D-102	PUMP STATION VAULTS AND WETWELL MODIFICATIONS
D-501	DETAILS
S-001	STRUCTURAL GENERAL NOTES
S-101	PLANS AND BUILDING SECTIONS
S-501	SECTIONS & DETAILS
S-502	SECTIONS & DETAILS
M-101	FLOOR AND ROOF PLAN - HVAC
M-601	SCHEDULES, DETAILS AND DIAGRAMS
E-001	ELECTRICAL SITE PLAN
E-101	FLOOR PLAN - LIGHTING & INSTRUMENTATION
E-102	FLOOR PLAN - POWER
E-601	ONE-LINE DIAGRAM
E-602	SCHEDULE

CONTRACT 1: CONSTRUCTION CONTRACT
CONTRACT 2: MOTOR SUPPLIER CONTRACT
CONTRACT 3: VFD SUPPLIER CONTRACT
CONTRACT 4: SCADA SUPPLIER CONTRACT

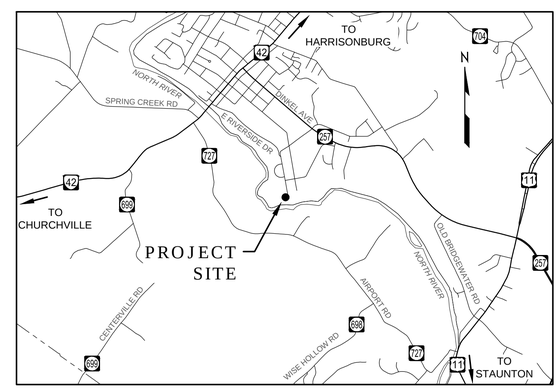

SITE MAP

SCALE: 1" = 3,000'

Wiley|Wilson® Constant Progress
127 Nationwide Drive, Lynchburg, Virginia 24502-4272
phone 434.947.1800 | fax 434.947.1801 | web wileywilson.com

PRE-FINAL REVIEW NOT FOR CONSTRUCTION

CITY OF HARRISONBURG
NORTH RIVER PUMP STATION UPGRADE
BRIDGEWATER, VIRGINIA

MRK	DATE	REVISION DESCRIPTION

COMM NO:	213110
DATE:	12/13/2013
DRAWN:	MCT
DESIGN:	AST
CHECK:	TLF

SHEET TITLE

COVER SHEET

SHT. NO.	REV. NO.
G-001	0

\\WILEYWILSON.COM\PROJ\2013\213110 HBURG N RIVER PS 2013 UPGRADE\CAD\213110G001.DWG 12/13/2013 3:08 PM

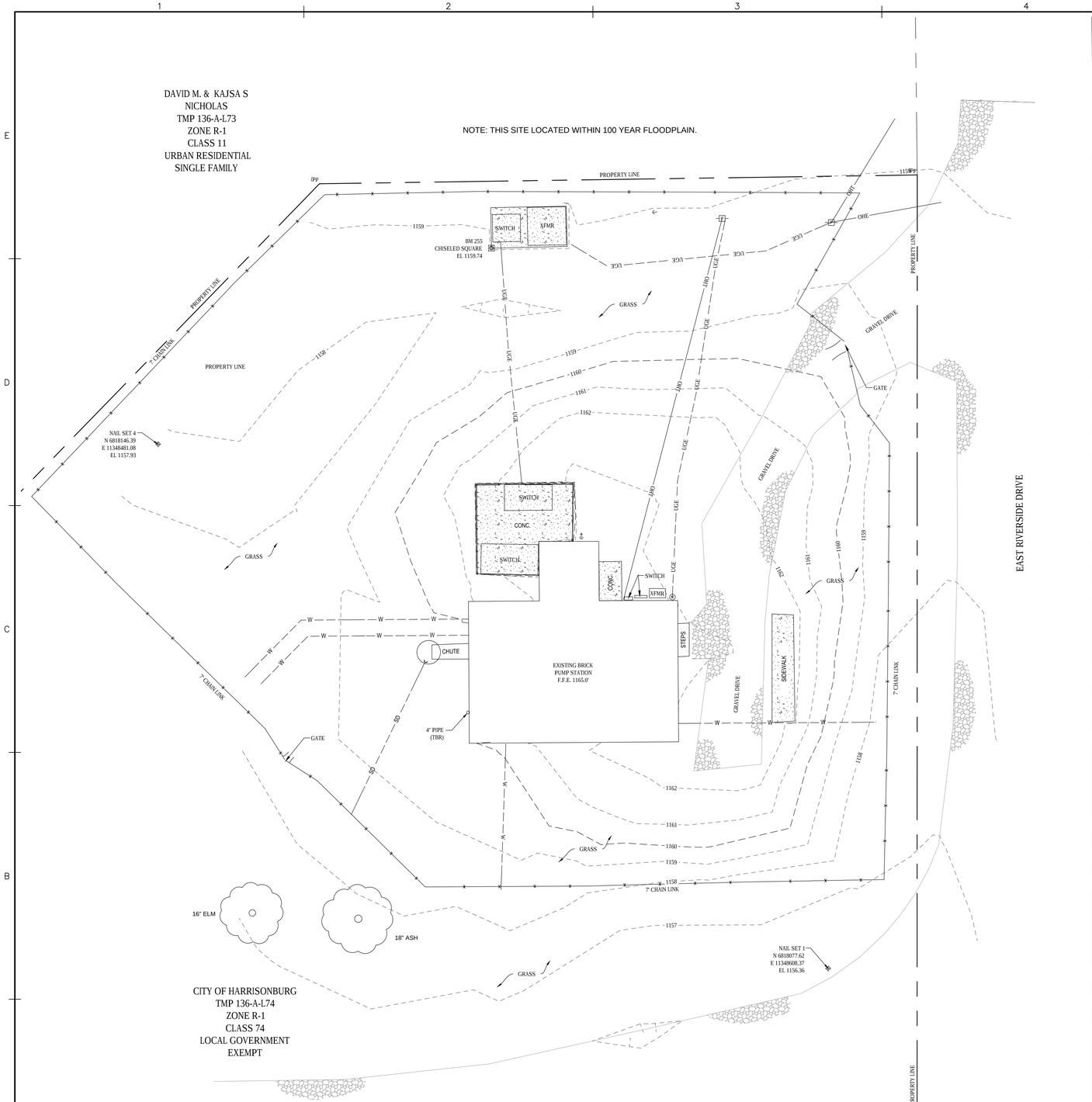

LEGEND

EXISTING		EXISTING	
	BENCHMARK		FENCELINE
	CONTROL POINT	10	MAJOR CONTOURS
	CONTROL POINT - NAIL SET		MINOR CONTOURS
	DOWNSPOUT	OHC	OVERHEAD CABLE
	DROP INLET	OHT	OVERHEAD TELEPHONE
	ELECTRIC PANEL	OHE	OVERHEAD ELECTRIC
	POWER POLE	UGE	UNDERGROUND ELECTRIC
	POWER MANHOLE	SD	STORM LINE
	GUYWIRE	W	WATER LINE
	FINISHED FLOOR ELEVATION		GRAVEL
	TREE		

GENERAL NOTES:

1. THIS TOPOGRAPHIC SURVEY WAS COMPLETED UNDER THE DIRECT AND RESPONSIBLE CHARGE OF,JAMES J. LEWIS, JR FROM AN ACTUAL GROUND SURVEY MADE UNDER MY SUPERVISION; THAT THE IMAGERY AND/OR ORIGINAL DATA WAS OBTAINED ON APRIL 18, 2013; AND THAT THIS PLAT, MAP, OR DIGITAL GEOSPATIAL DATA INCLUDING METADATA MEETS MINIMUM ACCURACY STANDARDS UNLESS OTHERWISE NOTED.
2. SURVEY CONDUCTED BY WILEY|WILSON, APRIL 18, 2013. VERTICAL CONTROL: NGVD 88; HORIZONTAL CONTROL: NAD 83 VIRGINIA STATE PLANE COORDINATE SYSTEM, NORTH ZONE, U.S. SURVEY FOOT.
3. CONTRACTOR SHALL BE INFORMED AND SHALL COMPLY WITH THE VIRGINIA OVERHEAD HIGH VOLTAGE LINE SAFETY ACT. ANY COSTS TO COVER LINES OR DISCONNECT SERVICE TO NEARBY POWER LINES SHALL BE AT THE CONTRACTOR'S EXPENSE. CONTRACTOR SHALL RETAIN FULL LIABILITY FOR COMPLIANCE WITH OSHA REGULATIONS AND THE SAFETY ACT. THE CONTRACTOR SHALL BEAR EXPENSE FOR POLE SUPPORT WHERE REQUIRED.
4. ALL EXISTING UNDERGROUND UTILITY LOCATIONS AS SHOWN ON THESE PLANS ARE APPROXIMATE AND MAY NOT REPRESENT ALL UNDERGROUND UTILITIES OR SERVICE LINES. CONTRACTOR IS RESPONSIBLE FOR VERIFYING EXACT LOCATION, DEPTH, SIZE, AND TYPE OF UTILITIES SHOWN AND NOTIFYING ENGINEER OF DISCREPANCIES. PRIOR TO EXCAVATION, THE CONTRACTOR SHALL CONTACT THE PERTINENT UTILITY COMPANIES AND/OR UTILITY LOCATING SERVICES TO HAVE ALL UNDERGROUND UTILITIES LOCATED AND MARKED. CONTRACTOR IS SOLELY RESPONSIBLE FOR DAMAGE TO PROPERTY, UTILITIES, OR PHYSICAL IMPROVEMENTS.
5. CONTACT "MISS UTILITY" AT 1-800-552-7001 TO DETERMINE THE LOCATIONS OF UNDERGROUND UTILITIES.
6. ALL WORK NOT COVERED BY THE PROJECT DOCUMENTS SHALL CONFORM TO THE LATEST EDITION OF THE CITY OF HARRISONBURG CONSTRUCTION STANDARDS.
7. SEE PROJECT MANUAL FOR ADDITIONAL PROJECT REQUIREMENTS.
8. SOILS INFORMATION DETERMINED GRAPHICALLY FROM SOIL SURVEY FOR ROCKINGHAM COUNTY, VIRGINIA.
9. CONTRACTOR SHALL COMPLY WITH ALL VIRGINIA EROSION & SEDIMENT CONTROL REGULATIONS.
10. THIS SURVEY WAS PREPARED WITHOUT THE BENEFIT OF A TITLE REPORT AND IS NOT INTENDED TO SHOW ALL EASEMENTS THAT MAY AFFECT THE PROPERTY.
11. ALL PROPERTY PINS DISTURBED BY CONTRACTOR ACTIVITIES SHALL BE REPLACED BY A VIRGINIA LICENSED LAND SURVEYOR AT CONTRACTOR'S EXPENSE.
12. THE EXISTENCE OF HAZARDOUS WASTE, VEGETATED WETLANDS, OR TIDAL WETLANDS WAS NEITHER INVESTIGATED NOR CONFIRMED DURING THE PERFORMANCE OF THIS SURVEY.

TOWN OF BRIDGEWATER
TMP 136-A-L80
ZONE R-1
CLASS 74
LOCAL GOVERNMENT
EXEMPT

IF THIS DRAWING IS REDUCED, GRAPHIC SCALE MUST BE USED.

0 10' 20'
SCALE: 1" = 10'

Wiley|Wilson®
Constant Progress
127 Nationwide Drive, Lynchburg, Virginia 24502-4272
phone 434.947.7190 | fax 434.947.1601 | web wileywilson.com

PRE-FINAL REVIEW
NOT FOR
CONSTRUCTION

CITY OF HARRISONBURG
NORTH RIVER PUMP STATION
UPGRADE
BRIDGEWATER, VIRGINIA

MRK	DATE	REVISION DESCRIPTION

COMM NO:	213110
DATE:	12/13/2013
DRAWN: MCT	DESIGN: AST
CHECK: TLF	
SHEET TITLE	
EXISTING SITE PLAN	
SHT. NO. C-001	REV. NO. 0

\\WILEYWILSON.COM\PROJ\2013\213110 HBURG N RIVER PS 2013 UPGRADE\CAD\CIVIL\213110C001.DWG 12/13/2013 3:08 PM

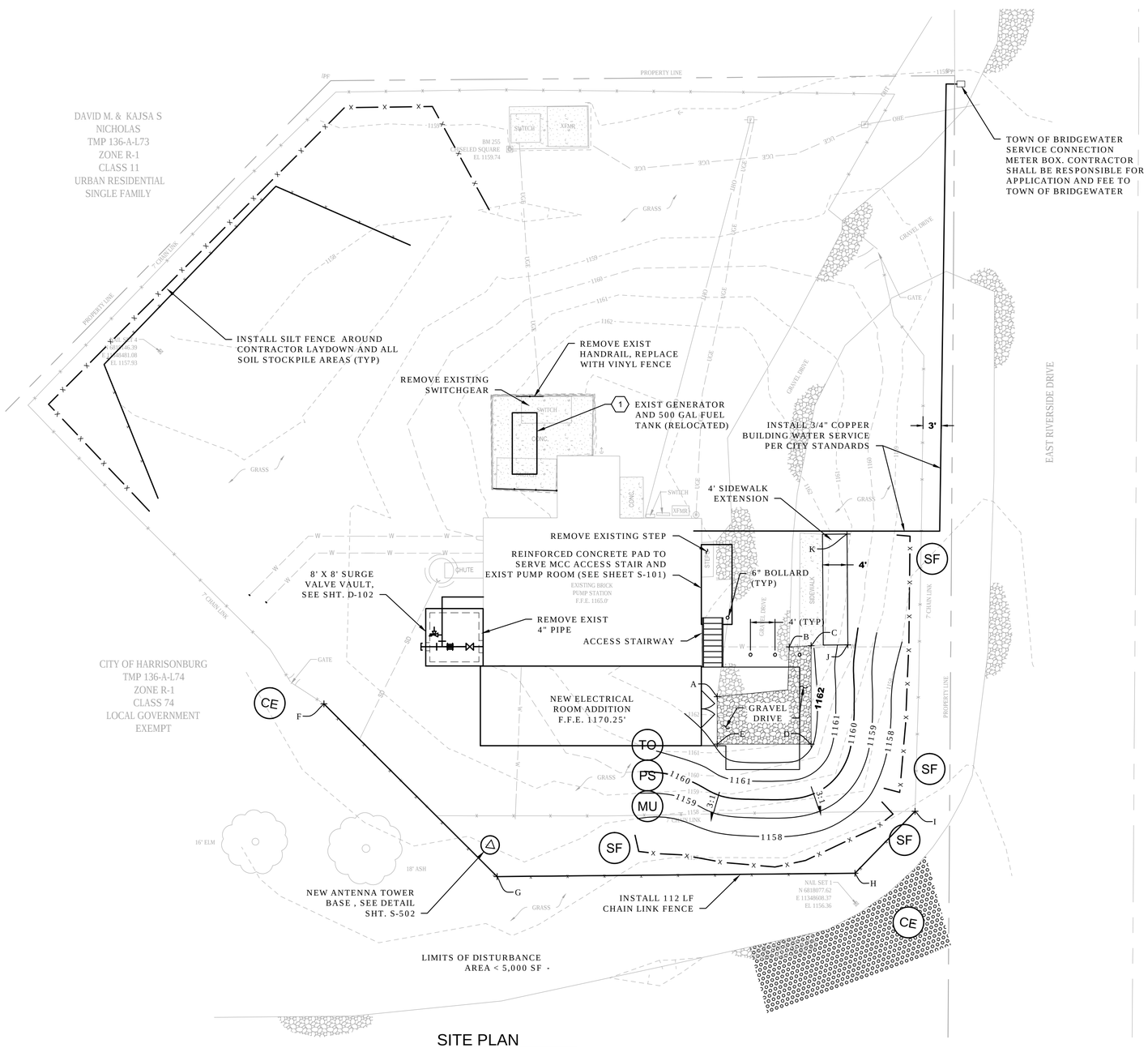

SITE PLAN

SCALE: 1" = 10'

POINT TABLE		
POINT	NORTHING	EASTING
A	6818106.86	11348580.22
B	6818116.90	11348590.35
C	6818117.71	11348593.83
D	6818101.92	11348596.63
E	6818099.26	11348581.56
F	6818094.54	11348517.33
G	6818071.77	11348550.02
H	6818082.47	11348607.33
I	6818094.11	11348615.21
J	6818118.88	11348599.69
K	6818136.63	11348596.42

GENERAL NOTES:

1. CONTRACTOR SHALL OBTAIN LAND DISTURBING PERMIT AND ZONING PERMIT AS REQUIRED BY TOWN OF BRIDGEWATER AND BUILDING PERMIT FROM ROCKINGHAM COUNTY. CONTRACTOR SHALL BE RESPONSIBLE FOR APPLICATIONS AND FEES.

NOTES:

(1) REMOVE EXISTING GENERATOR AND ENCLOSURE FROM PORTABLE TRAILER AND INSTALL ON EXISTING ELEVATED PLATFORM. PROVIDE EIGHT (8) ¾" DIA. WEDGE ANCHORS WITH MIN. 4-INCH EMBEDMENT.

EROSION AND SEDIMENT CONTROL LEGEND

3.02	TEMPORARY STONE CONSTRUCTION ENTRANCE	CE	
3.05	SILT FENCE	SF	X—X—X
3.30	TOPSOILING	TO	TO
3.32	PERMANENT SEEDING	PS	PS
3.35	MULCHING	MU	MU

CONSTRUCTION OF A SILT FENCE (WITH WIRE SUPPORT)

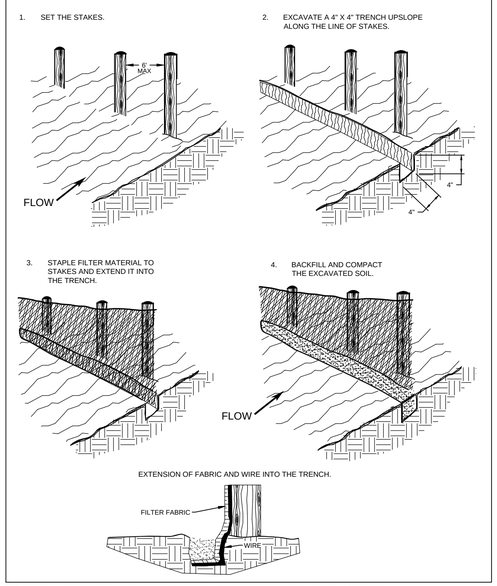

SOURCE: Adapted from Installation of Straw and Fabric Filter Barriers for Sediment Control, Sherwood & Wyant

SILT FENCE

NOT TO SCALE

PLATE 3.05-1 (SF)

IF THIS DRAWING IS REDUCED, GRAPHIC SCALE MUST BE USED.

0 10' 20'

SCALE: 1" = 10'

Wiley|Wilson® Constant Progress
127 Nationwide Drive, Lynchburg, Virginia 24502-4272
phone 434.947.1901 | fax 434.947.1601 | web wileywilson.com

PRE-FINAL REVIEW NOT FOR CONSTRUCTION

CITY OF HARRISONBURG
NORTH RIVER PUMP STATION UPGRADE
BRIDGEWATER, VIRGINIA

MRK	DATE	REVISION DESCRIPTION

COMM NO:	213110
DATE:	12/13/2013
DRAWN: MCT	DESIGN: AST
CHECK: TLF	
SHEET TITLE	SITE PLAN
SHT. NO. C-101	REV. NO. 0

\\WILEYWILSON.COM\PROJ\2013\213110 HBURG N RIVER PS 2013 UPGRADE\CAD\CIVIL\213110C101.DWG 12/13/2013 3:08 PM

SEQUENCE OF CONSTRUCTION:

THE RECOMMENDED SEQUENCE OF CONSTRUCTION THAT FOLLOWS IS PROVIDED TO ASSIST PERFORMING THE WORK WITH MINIMAL IMPACT ON FACILITY OPERATIONS. THE RECOMMENDED SEQUENCE OF CONSTRUCTION IS GENERAL IN NATURE, DOES NOT INCLUDE ALL STEPS OR DETAILS REQUIRED TO COMPLETE THE WORK AND IS NOT INTENDED TO DEFINE THE MEANS AND METHODS OF CONSTRUCTION HOWEVER THE PUMP STATION MUST REMAIN IN SERVICE DURING IMPROVEMENTS, WITH ANY LIMITED OUTAGES SCHEDULED 7-DAYS IN ADVANCE IN COORDINATION WITH OWNER.

CONSTRAINTS:

1. A MINIMUM OF TWO (2) RAW WATER PUMPS, TO INCLUDE PUMP, MOTOR, DRIVE AND ALL ANCILLARY EQUIPMENT FOR NORMAL OPERATION, SHALL REMAIN IN SERVICE, ACCESSIBLE AND FUNCTIONAL AT ALL TIMES EXCEPT FOR APPROVED PUMP STATION SHUTDOWNS. THIS INCLUDES LIMITATIONS ON OUTAGES REQUIRED FOR DISCHARGE PIPE MODIFICATIONS.

2. PUMP STATION SHUTDOWNS SHALL BE SCHEDULED WITH THE CITY A MINIMUM OF SEVEN (7) DAYS IN ADVANCE. CONTRACTOR SHALL PROVIDE WRITTEN NOTICE TO THE CITY REQUESTING A PUMP STATION SHUTDOWN. PUMP STATION SHUTDOWNS SHALL BE LIMITED TO 8 HOURS.

THE FOLLOWING PHASES SHALL BE COMPLETED SEQUENTIALLY. ALL WORK ASSOCIATED WITH PRECEDENT PHASE(S) SHALL BE COMPLETED PRIOR TO BEGINNING WORK ON ANTECEDENT PHASE(S). THE CONTRACTOR SHALL BE RESPONSIBLE FOR COORDINATING ALL START-UP AND TESTING ACTIVITIES WITH THE MOTOR PROVIDER AND VFD PROVIDER WHO HAVE PROVIDED THE RESPECTIVE OWNER FURNISHED EQUIPMENT FOR INSTALLATION BY CONTRACTOR. CONTRACTOR SHALL PROVIDE THE MOTOR PROVIDER AND VFD PROVIDER A SCHEDULE INDICATING SPECIFIC DATES OF MOTOR AND VFD INSTALLATION, FUNCTIONAL TESTING, AND PERFORMANCE TESTING A MINIMUM OF THIRTY (30) DAYS PRIOR TO THE PROPOSED DATE OF BEGINNING WORK ON PHASE 1. SCHEDULE UPDATES SHALL BE PROVIDED ONCE PER WEEK TO OWNER, MOTOR PROVIDER AND VFD PROVIDER. MOTOR AND VFD PROVIDERS WILL PROVIDE UP TO 6-DAYS OF ON-SITE SUPPORT FOR STARTUP AND COMMISSIONING OF THE NEW EQUIPMENT AT NO COST TO THE CONTRACTOR.

Phase 1:

1) Pre-requisites:
   - Contract 1: structural work complete (re: S-001, S-101, S-501 and S-502)
   - Contract 1: mechanical work complete (re: M-101, M-601)
   - Contract 1: electrical work with public utility to deliver power to all terminal points that are located in the new building addition (re: E-102, E-601, E-602), including lighting, HVAC and control panels. In addition, emergency power conductors and controls shall be in place from to same ready for connection of generator in future phase with minimal downtime.
   - Contract 1: SCADA installed complete beginning at and including the communications tower and then extending to SCADA RTU and then to all terminations that are located in the new building addition (re: E-101).
   - Contract 2: VFDs (3) & materials on site with certified shop test reports
   - Contract 3: none required
   - Contract 4: SCADA hardware programmed and tested ready for operations
2) Work:
   - Contract 1 shall coordinate with electrical company to provide power to new electrical gear and VFDs included in this project. This will require dual service connections to the building during commissioning. Existing service to remain in place until successful commissioning of pumps #3 is complete. Mount and connect VFDs.
   - Contract 1 to install VFD units with power complete.
   - Contract 2 representative shall conduct functional testing of all VFD units.
3) Deliverables:
   - New building initiated with all power, lighting, control panels including energized VFD.
   - Contract 2 representative issuing "Certificate of Proper Installation" for all VFD units..

Phase 2:

4) Pre-requisites:
   - Contract 1 and 2: phase 1 deliverables
   - Contract 3: motor #1 & materials on site with certified shop test report
5) Work:
   - Contract 1: extend electrical work from VFD#1 to Motor #1, extend SCADA conductors to all terminal points except those specific for pumps #2 and #3, remove existing pump #1 motor (return to owner), install new motor, and install new check valve for pump #1 piping.
   - Contract 2: motor provider representative to perform 48 hour functional test.
   - Energize Motor #1 under actual pump connection and VFD control for continuous 14 day period
   - Contract 2 & 3: provider representatives for motors and VFDs to conduct performance testing during 14 day run period.
6) Deliverables:
   - Contract 1: Properly operating Unit #1 pump / motor / controls
   - Contract 2: VFD representative issues "Certificate of Proper Operation" for Unit #1.
   - Contract 3: Motor representative issues "Certificate of Proper Operation" for Unit #1.
   - Contract 4: SCADA representative issues "Certificate of Proper Operation" for Unit #1 and other connected inputs/outputs.

Phase 3:

7) Pre-requisites:
   - Contracts 1,2,3 and 4: phase 2 deliverables
8) Work:
   - Contract 1: extend electrical work from VFD#3 to Motor #3, extend SCADA conductors to terminal points for pumps #3, remove existing pump #3 motor (return to owner), install new motor, and install new check valve for pump #1 piping.
   - Contract 2: motor provider representative to perform 48 hour functional test.
   - Energize Motor #3 under actual pump connection and VFD control operations for continuous 7 day period
   - Contract 2, 3, & 4: provider representatives for motors and VFDs to conduct performance testing during 7 day run period.

9) Deliverables:
   - Contract 1: Properly operating Unit #3 pump / motor / controls
   - Contract 2: VFD representative issues "Certificate of Proper Operation" for Unit #3.
   - Contract 3: Motor representative issues "Certificate of Proper Operation" for Unit #3.
   - Contract 4: SCADA representative issues "Certificate of Proper Operation" for Unit #3.

Phase 4:

10) Pre-requisites: Contracts 1,2,3 and 4: phase 3 deliverables

11) Work:
   - Contract 1: Demolish existing MTS and circuit gear from existing generator connection (return to owner); relocate generator to new location and make connection to future pump #1. Operate new pump #1 for 24 hours on new generator circuit.
   - Contract 4: Initiate generator control and monitor functions into SCADA.
12) Deliverables:
   - Contract 1: Properly operating Unit #1 pump / motor / controls on generator power supply and SCADA control / monitoring.

Phase 5:

1) Pre-requisites:
   - Contract 1 Phase 4 deliverable
   - City: Install Pump SN TD-1111 into pump slot #2.
2) Work:
   - Contract 1: extend electrical work from VFD#2 to Motor #2, extend SCADA conductors to terminal points for pumps #2, and remove existing pump #2 motor (return to owner), install new motor, and , and install new check valve for pump #2 piping. Also connect pump #2 circuit to new emergency generator.
   - Contract 2: motor provider representative to perform 48 hour functional test.
   - Energize Motor #2 under actual pump connection and VFD control operations for continuous 7 day period
   - Contract 2 & 3: provider representatives for motors and VFDs to conduct performance testing during 7 day run period.

3) Deliverables:
   - Contract 1: Properly operating Unit #3 pump / motor / controls
   - Contract 2: VFD representative issues "Certificate of Proper Operation" for Unit #3.
   - Contract 3: Motor representative issues "Certificate of Proper Operation" for Unit #3.
   - Contract 4: SCADA representative issues "Certificate of Proper Operation" for Unit #3.

Phase 6:

- City: May option to conduct a pump / motor condition assessment analysis to include one or more of the following:
   - Pump testing for capacity, head, brake horsepower, efficiency, vibration amplitude of pump and driver, vibration frequency analysis, and overview of seal and lube systems.
   - Motor testing for standard circuit testing, polarized index testing, step voltage, voltage analysis for phase & balance, and current analysis for rush / startup, demodulation, signature analysis and stator eccentricity.

GENERAL NOTES:

1. PVC SCHEDULE 80 PIPING SHALL BE PVC TYPE I, GRADE I, CLASS 1254-B PER ASTM ASTM1784 AND ASTM D1785 WITH 2 PERCENT TITANIUM DIOXIDE FOR ULTRAVIOLET PROTECTION. FITTINGS SHALL BE ASTMD2466 SOLVENT WELD (SOLVENT CEMENT PER ASTM D2564) OR FLANGED (ANSI 250# B16.1) WITH 2 PERCENT TITANIUM DIOXIDE FOR ULTRAVIOLET PROTECTION. ALL HARDWARE SHALL BE ASTM A193M TYPE 316 STAINLESS STEEL WITH GRADE B8M HEX HEAD BOLTS AND ASTM A194M GRADE 8M HEX HEAD NUTS.

2. CLASS 250 DUCTILE IRON PIPE, FITTINGS AND ACCESSORIES AWWA D115/C110, FLANGES 250LB ANSI B 16.1. ALL HARDWARE SHALL BE ASTM A193M TYPE 316 STAINLESS STEEL WITH GRADE B8M HEX HEAD BOLTS AND ASTM A194M GRADE 8M HEX HEAD NUTS.

3. ALL MISCELLANEOUS METAL/HARDWARE SHALL BE 304 SST UNLESS OTHERWISE NOTED.

NOTES:

(1) REPLACE EXISTING MOTORS WITH NEW OWNER FURNISHED MOTORS TO BE INSTALLED BY CONTRACTOR. CONTRACTOR SHALL FIELD VERIFY COUPLING COMPATIBILITY OF NEW MOTOR PRIOR TO REMOVING EXISTING MOTOR FROM SERVICE. REFER TO RECOMMENDED SEQUENCE OF CONSTRUCTION, THIS SHEET. MOTORS TO BE REPLACED SEQUENTIALLY, IN CONJUNCTION WITH ELECTRICAL UPGRADE TO KEEP PUMP STATION IN SERVICE DURING CONSTRUCTION.

(2) INSTALL PRESSURE TRANSDUCER ON EXISTING TAP CONNECTION. PROVIDE 316 SS BALL VALVE TO ISOLATE PRESSURE TRANSDUCER. PROVIDE 316 SS PIPE TO MATCH EXISTING TAP AS REQUIRED TO INSTALL PRESSURE TRANSDUCER.

(3) INSTALL NEW 3/4-INCH COPPER WATER SERVICE, PROVIDE 3/4-INCH HOSE BIB AND VACUUM BREAKER; PROVIDE DISTRIBUTION PIPING AND ISOLATION VALVES TO EACH WATER COOLED HEAT EXCHANGER AT MAIN PUMPS

(4) PROVIDE RAIL MOUNTED SUMP PUMP WITH RAIL SYSTEM AND BASE ELBOW. SUMP PUMP SHALL BE FLYGT NP 3085 MT 1 463 (135 MM IMPELLER) WITH 3" DISCHARGE. MOTOR SHALL BE 1800 RPM 2.4 HP 230V 1PH. FIELD ROUTE 3-INCH SCH 80 PVC DISCHARGE PIPING TO SCREEN SLUICE GATE VIA CORE DRILL. PROVIDE 3-INCH SWING CHECK AND 3-INCH BALL VALVE MOUNTED VERTICALLY IN WETWELL ADJACENT TO PUMP. PROVIDE 304 SS PIPE SUPPORTS FROM WALL OR SUMP LADDER AS REQUIRED. PROVIDE A LOCAL CONTROL PANEL WITH HAND/OFF/AUTO SWITCH, RUN/STOP LO STATUS LIGHTS, MOTOR TEMPERATURE AND MOISTURE INTERLOCKS AND LED FAULT LIGHTS. IN AUTO MODE CONTROL PANEL SHALL CONTROL PUMPS TO RUN FOR A USER ADJUSTABLE TIME PERIOD (0-10 MINUTES IN MIN 0.1 MINUTE INCREMENTS) EACH HOUR. TIME PERIOD SHALL BE ADJUSTED VIA TOUCH SCREEN DISPLAY ON FRONT OF CONTROL PANEL. PROVIDE SUBMITTAL FOR PUMPS, CONTROL PANEL AND ACCESSORIES FOR APPROVAL.

(5) PROVIDE 12" ANSI CLASS 250 CUSHIONED SWING CHECK VALVE FIGURE 250D BY GOLDEN ANDERSON. OPENING RESISTANCE AND RATE OF CLOSURE SHALL BE CONTROLLED BY ADJUSTING THE POSITION AND MASS OF A COUNTER-WEIGHT MOUNTED ON THE EXTERNAL SWING ARM. A PNEUMATIC CYLINDER "CUSHION" SHALL BE PROVIDED TO SLOW THE RATE OF CLOSURE IMMEDIATELY PRIOR TO CLOSURE. THE VALVE SHALL BE MONITORED WITH A POSITION SWITCH MOUNTED ON THE SWING ARM AND INTERLINKED TO SCADA TO ALERT ON DRY-RUN CONDITIONS. SWING CHECK VALVES SHALL ALLOW IN-FIELD MODIFICATION TO GAIN ADDITIONAL FUNCTIONALITY WITHOUT PHYSICALLY REMOVING THE VALVE FROM THE LINE. THESE INCLUDE ADDING SPRINGS TO INCREASE CLOSURE SPEED, ADJUSTING THE CAPACITY OF EXTERNAL PNEUMATIC CUSHIONING AND ADJUSTING THE MASS AND POSITION OF THE COUNTERWEIGHT. THE MANUFACTURER SHALL PROVIDE A RECOMMENDED COUNTERWEIGHT MASS AND POSITION AS WELL AS CUSHIONING CYLINDER SETTING. PROVIDE SUBMITTAL FOR APPROVAL.

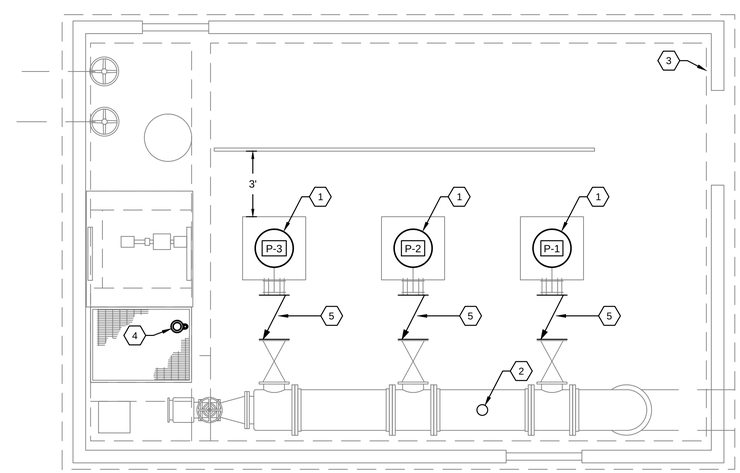

PUMP STATION INTERIOR PLAN

SCALE: 1/4" = 1'-0"

IF THIS DRAWING IS REDUCED, GRAPHIC SCALE MUST BE USED.

0 2' 4' 8'

SCALE: 1/4" = 1'-0"

Wiley|Wilson® Constant Progress
127 Nationwide Drive, Lynchburg, Virginia 24502-4272
phone 434.947.7190 | fax 434.947.1601 | web wileywilson.com

PRE-FINAL REVIEW NOT FOR CONSTRUCTION

CITY OF HARRISONBURG
NORTH RIVER PUMP STATION UPGRADE
BRIDGEWATER, VIRGINIA

MRK	DATE	REVISION DESCRIPTION

COMM NO: 213110
DATE: 12/13/2013
DRAWN: MCT DESIGN: AST
CHECK: TLF

SHEET TITLE

PUMP STATION INTERIOR PLAN

SHT. NO. D-101 REV. NO. 0

\\WILEYWILSON.COM\PROJ\2013\213110 HBURG N RIVER PS 2013 UPGRADE\CAD\CIVIL\213110D101.DWG 12/13/2013 3:08 PM

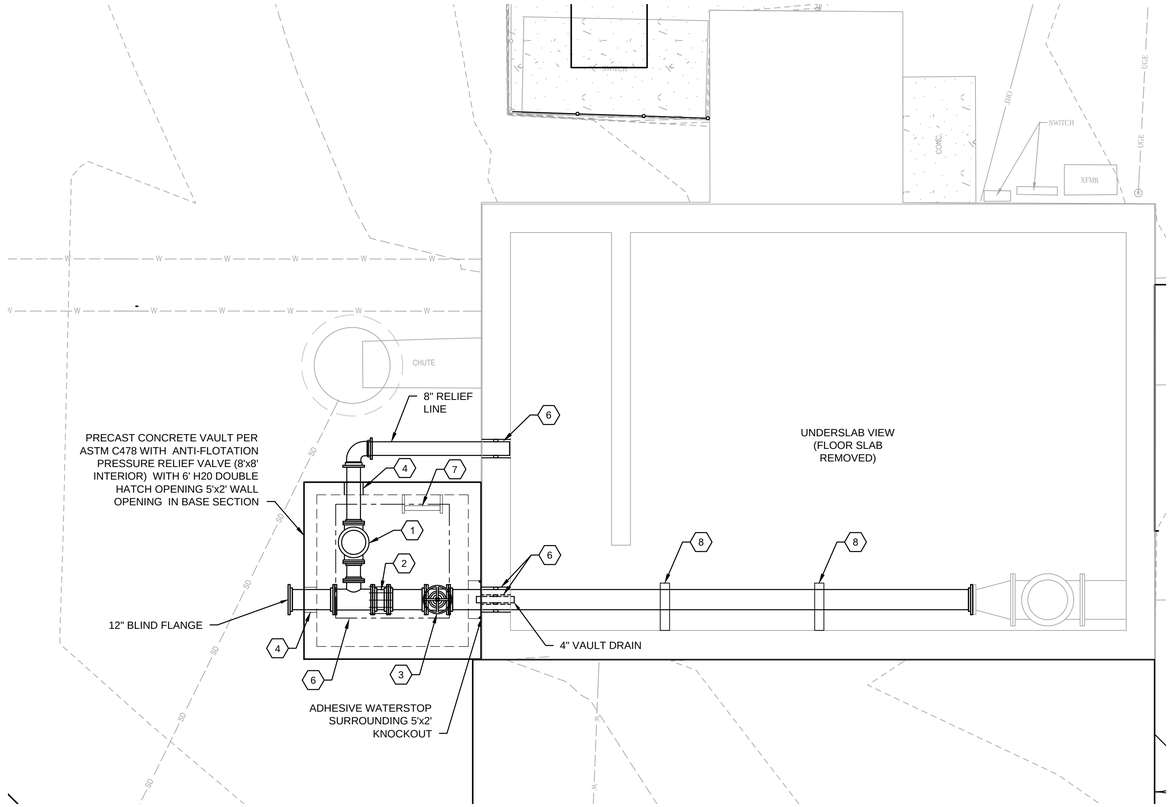

DETAILED SITE PLAN AND PUMP STATION WETWELL

SCALE: 1/4" = 1'-0"

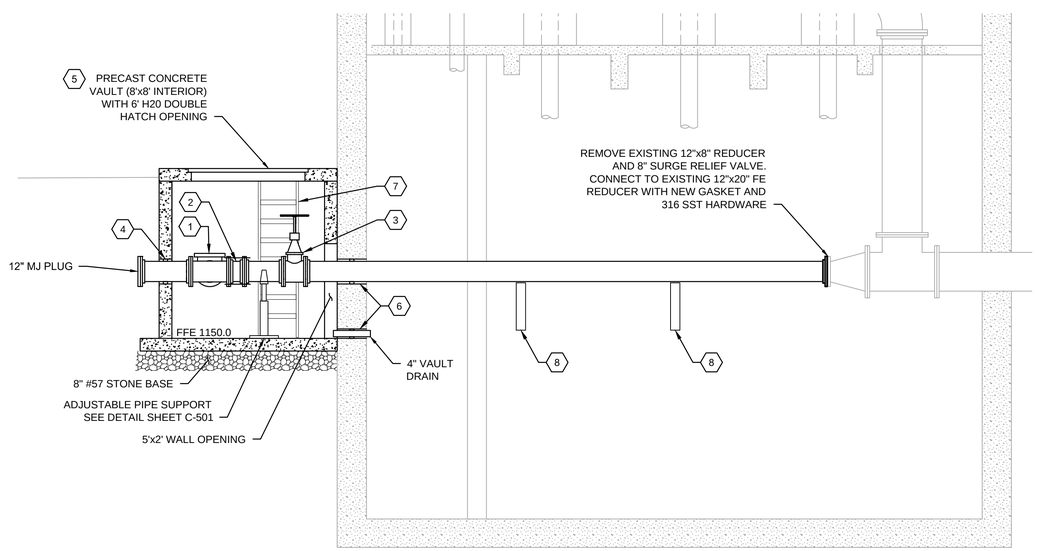

2 / D-102 SURGE ANTICIPATION VALVE VAULT PROFILE

SCALE: 1/4" = 1'-0"

GENERAL NOTES:

1. NON-SHRINK GROUT FOR ALL OPENINGS UNLESS INDICATED OTHERWISE. "LINK SEAL" REFERS TO MODULAR WALL SEAL.
2. ALL INTERIOR DIP IS FLANGED. ALL BURIED DIP IS RESTRAINED MECHANICAL JOINT WITH POLY WRAP. CLASS 250 DUCTILE IRON PIPE, FITTINGS AND ACCESSORIES AWWA D115/C110, FLANGES 125LB ANSI B 16.1.ALL HARDWARE SHALL BE ASTM A193M TYPE 316 STAINLESS STEEL WITH GRADE B8M HEX HEAD BOLTS AND ASTM A194M GRADE 8M HEX HEAD NUTS.
3. ALL MISC. METAL/HARDWARE SHALL BE 304 SS UNLESS OTHERWISE NOTED.
4. COAT EXPOSED DIP WITH PAINT SYSTEM AS FOLLOWS:
   SURFACE PREP SSPC-SP5, PRIME COAT AS RECOMMENDED BY MANUFACTURER, HIGH BUILD EPOXY 16 MDFT, MANUFACTURER: TNEMEC OR SHERWIN WILLIAMS.
5. ALL PRECAST CONCRETE STRUCTURES SHALL BE COATED WITH EXTERNAL BITUMINOUS WATERPROOFING. SURFACE PREP SSPC-SP12, 2 COATS BITUMINOUS WATERPROOFING 16 MDFT, MANUFACTURER: TNEMEC OR SHERWIN WILLIAMS.
6. ELECTRICAL/CONTROLS CONDUITS ARE NOT SHOWN. REFER TO SHEET E-101 AND E-502.

NOTES:

1. 8" COMBINATION SURGE ANTICIPATION AND PRESSURE RELIEF VALVE WITH CLASS 250 FLANGES. MANUFACTURER SHALL BE CLA-VAL MODEL 52-03 GLOBE BODY. PROVIDE 1" 316 SS REMOTE SENSING LINES, BALL VALVES AND TAPS AS RECOMMENDED BY MANUFACTURER. REMOTE SENSING LINE SHALL ORIGINATE AT CONNECTION TO EXISTING DISCHARGE HEADER AND BE FIELD ROUTED TO VALVE. PROVIDE SECONDARY 1" 316 SS SENSING TAP AND ISOLATION BALL VALVE IN VAULT. PROVIDE SUBMITTAL FOR APPROVAL.
2. 12" RESTRAINED DISMANTLING JOINT ANSI CLASS 250. ROMAC DJ400 OR EQUAL.
3. 12" GATE VALVE, ANSI CLASS 250 (NORMALLY OPEN).
4. PRECAST PENETRATION WITH LINK SEAL
5. HATCH COVER PLACEMENT SHALL ALLOW UNRESTRICTED VERTICAL REMOVAL OF 8" SURGE ANTICIPATION VALVE AND 12" ORIFICE PLATE. HATCH SHALL BE BILCO JDAL-H20 OR HALLIDAY H20 TWO 3'-0" X 6'-0" LEAVES WITH SAFETY GRATING (RETRO GRATE OR EQUAL)
6. CORE DRILL EXISTING WET WELL AND PROVIDE MODULAR MECHANICAL SEAL (LINK SEAL OR EQUAL)
7. PROVIDE ALUM ACCESS LADDER WITH TELESCOPING SAFETY POST (NOT SHOWN FOR CLARITY) 316 SS SUPPORTS FROM WALL OF VAULT.
8. WALL MOUNTED PIPE SUPPORT BRACKET. B-LINE B3067-2, WELDED BRACKET - HEAVY DUTY (TOLCO FIG. 30H) OR EQUAL. BRACKETS SHALL BE SPACED EQUALLY ALONG PIPE LENGTH. MAXIMUM UNSUPPORTED LENGTH 10'.

IF THIS DRAWING IS REDUCED, GRAPHIC SCALE MUST BE USED.

0 4' 8'

SCALE: 1" = 4'

Wiley|Wilson® Constant Progress
127 Nationwide Drive, Lynchburg, Virginia 24502-4272
phone 434.947.1901 | fax 434.947.1601 | web wileywilson.com

PRE-FINAL REVIEW NOT FOR CONSTRUCTION

CITY OF HARRISONBURG
NORTH RIVER PUMP STATION UPGRADE
BRIDGEWATER, VIRGINIA

MRK	DATE	REVISION DESCRIPTION
0	XX/XX/XX	---

COMM NO:	213110
DATE:	12/13/2013
DRAWN: MCT	DESIGN: AST
CHECK:	TLF
SHEET TITLE	
PUMP STATION VAULTS AND WETWELL MODIFICATIONS	
SHT. NO. D-102	REV. NO. 0

\\WILEYWILSON.COM\PROJ\2013\213110 HBURG N RIVER PS 2013 UPGRADE\CAD\CIVIL\213110D102.DWG 12/13/2013 3:08 PM

BURIED VALVE AND VALVE BOX

NOT TO SCALE

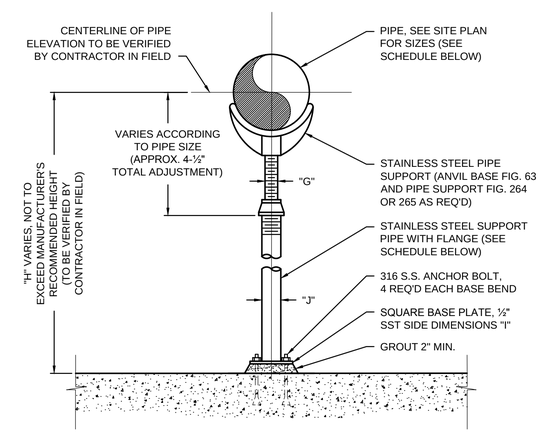

NOMINAL PIPE DIAMETER	STAINLESS STEEL ANCHOR BOLTS		SUPPORT DETAILS			
	SIZE	LENGTH (MIN.)	"G"	"H"	"I"	"J"
12"	5/8"	9"	2¼"	VARIES	18"	3"

ADJUSTABLE PIPE SUPPORT

NOT TO SCALE

0 1' 2' 4'
SCALE: 1/2" = 1'-0"
0 2' 4' 8'
SCALE: 1/4" = 1'-0"

Wiley|Wilson®
Constant Progress
127 Nationwide Drive, Lynchburg, Virginia 24502-4272
phone 434-947-1901 | fax 434-947-1601 | web wileywilson.com

PRE-FINAL REVIEW
NOT FOR CONSTRUCTION

CITY OF HARRISONBURG
NORTH RIVER PUMP STATION UPGRADE
BRIDGEWATER, VIRGINIA

MRK	DATE	REVISION DESCRIPTION

COMM NO:	213110
DATE:	12/13/2013
DRAWN: MCT	DESIGN: AST
CHECK:	TLF

SHEET TITLE

DETAILS

SHT. NO. D-501
REV. NO. 0

\\WILEYWILSON.COM\PROJ\2013\213110 HBURG N RIVER PS 2013 UPGRADE\CAD\CIVIL\213110D501.DWG 12/13/2013 3:08 PM

STRUCTURAL GENERAL NOTES

STRUCTURAL GENERAL NOTES ARE INTENDED TO HIGHLIGHT OR IN SOME CASES SUPPLEMENT PROJECT SPECIFICATIONS. REFER TO THE PROJECT SPECIFICATIONS FOR COMPLETE WORK COVERAGE.

A. GOVERNING CODES

1. VIRGINIA UNIFORM STATEWIDE BUILDING CODE (USBC), 2009 EDITION
2. INTERNATIONAL BUILDING CODE (IBC), 2009 EDITION
3. AMERICAN CONCRETE INSTITUTE (ACI), 318-08
4. AMERICAN INSTITUTE OF STEEL CONSTRUCTION (AISC), 13TH EDITION

B. DESIGN LOADS AND CRITERIA

1. GRAVITY LOADS (PSF):

ROOF
DEAD LOAD: SELF WEIGHT
SNOW LOAD: 25 PSF
GROUND SNOW LOAD = 35 PSF
EXPOSURE FACTOR: Ce = 1.0
THERMAL FACTOR: Ct = 1.0
IMPORTANCE FACTOR: I = 1.0

FLOORS
DEAD LOAD: SELF WEIGHT + 10 PSF
LIVE LOAD: ELECTRICAL ROOM 150 PSF
GRATING PLATFORM AND STAIRS 100 PSF

2. WIND CRITERIA: 3 SEC GUST WIND SPEED = 90 MPH
BUILDING CATEGORY: ENCLOSED
I = 1.0 / EXPOSURE C
INTERNAL PRESSURE COEFFICIENT: ± 0.18

3. SEISMIC CRITERIA: SITE CLASS D (ASSUMED, NO GEOTECHNICAL REPORT)
SDS = .216 / SD1 = .099
I = 1.0
SEISMIC DESIGN CATEGORY B
LATERAL FORCE RESISTING SYSTEM:
ORDINARY STEEL CONCENTRICALLY BRACED FRAMES & ORDINARY PRECAST CONCRETE SHEAR BEARING WALLS

4. FOOTING BEARING PRESSURE: 1500 PSF (ASSUMED, NO GEOTECHNICAL REPORT)
5. SOIL FRICTION COEFFICIENT: 0.25
6. LATERAL SOIL PRESSURE: 60 PCF ACTIVE EQUIVALENT FLUID PRESSURE
100 PCF AT-REST EQUIVALENT FLUID PRESSURE
7. FROST DEPTH: 30 INCHES

C. MATERIALS

1. CONCRETE: PORTLAND CEMENT ASTM C150 TYPE I/II
FLY ASH ASTM C618, 10% - 25% BY WEIGHT OR
GROUND GRANULATED BLAST-FURNACE SLAG, ASTM 989
MAX 50% OF CEMENTITIOUS MATERIALS BY WEIGHT
WATER / CEMENT + FLY ASH = 0.50 MAXIMUM
28 DAY f'c = 3000 PSI
AIR CONTENT 4.5% - 7.5% FOUNDATIONS
NO AIR ENTRAINMENT IN TOPPING SLAB
3/4" MAX. NORMAL WEIGHT AGGREGATE IN FOUNDATIONS
3/8" MAX. NORMAL WEIGHT AGGREGATE IN TOPPING SLAB

2. REINFORCING BARS: ASTM A615, GRADE 60
3. WELDED WIRE FABRIC: ASTM A185, FLAT SHEET MATERIAL
4. ANCHOR RODS: ASTM F1554 GRADE 36
5. GROUT: ASTM C1107, NON-METALLIC NON-SHRINK, 3 DAY f'c = 4000 PSI
6. MASONRY UNITS: ASTM C90, GRADE N, f'c = 1900 PSI
7. MORTAR: ASTM C270, TYPE S
8. MASONRY GROUT: ASTM C476 FINE, f'c = 2000 PSI WITH 10" SLUMP
9. CMU ASSEMBLIES: 28 DAY f'm = 1500 PSI, UNIT STRENGTH METHOD
10. STRUCTURAL STEEL:
W SHAPES: ASTM A992, Fy = 50 KSI
OTHER ROLLED SHAPES: ASTM A36, Fy = 36 KSI
PLATES: ASTM A36, Fy = 36 KSI
PIPE: ASTM A53 GRADE B, Fy = 35 KSI
HSS -SQUARE OR RECT: ASTM A500 GRADE B, Fy = 46 KSI
HSS -ROUND: ASTM A500 GRADE B, Fy = 42 KSI
11. HIGH STRENGTH BOLTS: ASTM A325 TYPE 1 UNCOATED; STEEL TO STEEL CONNECTIONS
12. BOLTS: ASTM A307; WOOD OR WOOD TO STEEL CONNECTIONS FOR ERECTION ONLY
13. HEADED ANCHOR STUDS: ASTM A108 GRADE 1010 - 1020, TYPE B, Fu = 60 KSI (AWS D1.1 TABLE 7.1, TYPE B)
14. WELD METAL: F7X-EXXX OR E70XX
15. EXPANSION ANCHORS: STUD TYPE EXPANSION ANCHOR WITH SINGLE PIECE WEDGE HILTI KWIK BOLT II EXPANSION ANCHOR OR EQUAL W/ COMPRESSION RING, EXPANSION CONE AND EXPANSION SLEEVE
16. ADHESIVE ANCHORS: ASTM A36 SHANK - ALL THREAD TYPE, INJECTABLE ADHESIVE TYPE TO SUIT BASE MATERIAL AS APPROVED BY THE ENGINEER

D. MISCELLANEOUS

1. CONTRACTOR SHALL OBTAIN BUILDING PERMIT AND APPROVALS FROM ROCKINGHAM COUNTY.
2. REFERENCE CIVIL DRAWINGS FOR BUILDING LOCATION AND ORIENTATION ON THE SITE. DRAWING ELEVATION REFERENCE 0'-0" = 1165' CIVIL DATUM.
3. COORDINATE OPENINGS AND EMBEDDED ITEMS IN PRECAST CONCRETE WORK WITH ALL TRADES.
4. NOTIFY ENGINEER OF ANY DISCREPANCIES DISCOVERED WITH OTHER TRADES.
5. TEMPORARILY BRACE THE STRUCTURE TO RESIST ALL LOADS OR COMBINATIONS OF LOADS UNTIL ALL PERMANENT ELEMENTS ARE IN PLACE AND ALL CONNECTIONS ARE COMPLETE AS SHOWN.

E. SHOP DRAWINGS:

1. SHOP DRAWINGS SHALL BE SUBMITTED FOR ALL STRUCTURAL ITEMS. CONSTRUCTION DOCUMENTS SHALL NOT BE REPRODUCED FOR USE AS SHOP DRAWINGS.
2. THE GENERAL CONTRACTOR SHALL REVIEW AND STAMP ALL SHOP DRAWINGS AND PRODUCT DATA FOR CONFORMANCE WITH THE CONSTRUCTION DOCUMENTS PRIOR TO SUBMITTAL. ANY SHOP DRAWINGS OR PRODUCT DATA NOT REVIEWED AND STAMPED BY THE GENERAL CONTRACTOR WILL BE RETURNED WITHOUT REVIEW. THE CONTRACTOR SHALL CLOUD OR FLAG ALL ITEMS NOT IN ACCORDANCE WITH CONTRACT DOCUMENTS.
3. ANY CHANGES, SUBSTITUTIONS, OR DEVIATIONS FROM THE ORIGINAL CONTRACT DRAWINGS SHALL BE CLOUDED BY THE MANUFACTURER OR FABRICATOR. ANY CHANGES, SUBSTITUTIONS, OR DEVIATIONS WHICH ARE NOT CLOUDED OR FLAGGED BY SUBMITTING PARTIES, SHALL NOT BE CONSIDERED ALLOWED AFTER THE ENGINEER'S REVIEW, UNLESS NOTED ACCORDINGLY BY THE STRUCTURAL ENGINEER.
4. THE STRUCTURAL ENGINEER RESERVES THE RIGHT TO ALLOW OR NOT ALLOW ANY CHANGES TO THE ORIGINAL CONTRACT DRAWINGS AT ANY TIME BEFORE OF AFTER SHOP DRAWING REVIEW.
5. THE SHOP DRAWINGS DO NOT REPLACE THE ORIGINAL CONTRACT DRAWINGS. ITEMS OMITTED OR SHOWN INCORRECTLY AND WHICH ARE NOT NOTED AS ALLOWED BY THE STRUCTURAL ENGINEER OR ARCHITECT ARE NOT TO BE CONSIDERED CHANGES TO THE ORIGINAL CONTRACT DRAWINGS. IT IS THE CONTRACTOR'S RESPONSIBILITY TO ENSURE THAT ITEMS OMITTED OR SHOWN INCORRECTLY ARE CONSTRUCTED IN ACCORDANCE WITH THE ORIGINAL CONTRACT DRAWINGS.
6. ALL ENGINEERING DESIGNS AND LAYOUTS PERFORMED BY OTHERS SHALL BE SEALED BY A PROFESSIONAL ENGINEER REGISTERED IN THE STATE IN WHICH THE PROJECT IS LOCATED.
7. REVIEW OF SHOP DRAWINGS IS INTENDED ONLY AS AN AID TO THE CONTRACTOR IN OBTAINING CORRECT SHOP DRAWINGS. RESPONSIBILITY FOR CORRECTNESS AND COMPLETENESS SHALL REST WITH THE CONTRACTOR.
8. SHOP DRAWINGS WILL BE RETURNED FOR RESUBMITTAL IF MAJOR ERRORS ARE FOUND DURING REVIEW.

F. FOUNDATIONS

1. FOUNDATIONS HAVE BEEN DESIGNED BASED ON ASSUMED VALUES. NO GEOTECHNICAL REPORT WAS PROVIDED.
2. ALWAYS PROVIDE POSITIVE SURFACE WATER DRAINAGE AWAY FROM THE STRUCTURE.
3. CONTRACTOR SHALL NOTIFY "MISS UTILITY OF VIRGINIA" PRIOR TO BEGINNING EXCAVATION FOR LOCATION OF UNDERGROUND UTILITIES. THE CONTRACTOR SHALL BEAR SOLE RESPONSIBILITY FOR COSTS ASSOCIATED WITH DAMAGE AND REPAIR OF ANY LINE MARKED BY MISS UTILITY.
4. EXTERIOR FOOTINGS AND COLUMN FOOTINGS WERE DESIGNED TO BEAR ON UNDISTURBED SOIL BELOW THE FROST LINE A MINIMUM 2'-6" BELOW EXISTING GRADE WITH A MINIMUM SOIL BEARING PRESSURE OF 1500 PSF. THE OWNER SHALL EMPLOY A GEOTECHNICAL ENGINEER TO VERIFY THAT THIS ALLOWABLE SOIL BEARING PRESSURE IS ATTAINABLE. IF THIS IS NOT ATTAINABLE, THE OWNER/CONTRACTOR SHALL CONTACT THE ENGINEER TO REDESIGN.

G. CONCRETE

1. PERFORM CONCRETE WORK IN ACCORDANCE WITH ACI 301-08 "STANDARD SPECIFICATION FOR STRUCTURAL CONCRETE" UNLESS MORE STRINGENT REQUIREMENTS ARE INDICATED.
2. MINIMUM REINFORCING BAR COVER:
3" AT UNFORMED SURFACES EXPOSED TO EARTH
2" AT FORMED SURFACES EXPOSED TO EARTH OR WEATHER FOR #6 AND LARGER
1½" AT FORMED SURFACES EXPOSED TO EARTH OR WEATHER FOR #3-#5
1" AT SLABS AND WALLS NOT EXPOSED TO EARTH OR WEATHER
3. SPLICE REINFORCING BARS BY LAPPING AT LEAST 48 BAR DIAMETERS.
4. SECURE ALL REINFORCING, INCLUDING WWF, IN POSITION WITH CHAIRS BEFORE CONCRETE PLACEMENT. CONCRETE DOBIES MAY BE USED TO POSITION SLAB ON GRADE REINFORCEMENT.
5. TIE DOWELS IN PLACE BEFORE PLACING CONCRETE. DO NOT STAB OR "WET-SET" DOWELS.
6. INSTALL AND SECURE EMBEDMENTS SUCH AS ANCHOR BOLTS AND EMBEDMENT PLATES WITHIN SPECIFIED TOLERANCES BEFORE CONCRETE PLACEMENT.
7. MECHANICALLY VIBRATE ALL CONCRETE PLACEMENTS EXCEPT SLABS LESS THAN 5" THICK.
8. WHERE SLAB CONTRACTION JOINTS ARE SHOWN ON THE DRAWINGS, CONSTRUCTION JOINTS MAY BE SUBSTITUTED TO ACCOMMODATE THE CONTRACTOR'S PLACEMENT STRATEGY.
9. FREE WATER ON THE SLAB SURFACE DURING FINISHING OPERATIONS IS PROHIBITED. SOFT CUT CONTRACTION JOINTS AS SOON AS POSSIBLE - GENERALLY WITHIN 6 HOURS AFTER FINISHING.
10. PROTECT AND CURE ALL CONCRETE SURFACES. BEGIN CURING WALLS IMMEDIATELY AFTER STRIPPING FORMS AND FLATWORK IMMEDIATELY AFTER FINISHING.
11. CONCRETE SURFACES TO RECEIVE GROUT UNDER COLUMN BASEPLATES MUST BE PREPARED BY LIGHT BUSH HAMMERING (1/4" AMPLITUDE) THE GROUTED AREA AND PRE-SOAKING.

H. PRECAST CONCRETE HOLLOW CORE DECK UNITS

1. PRECAST CONCRETE HOLLOW CORE DECK UNITS SHALL BE 6 INCH THICK. DECK UNITS SHALL BE TYPICALLY 48 WIDE (UNCUT) AND SHALL BE GROUTED TOGETHER ALONG EACH JOINT BETWEEN THE UNITS TO PROVIDE LATERAL AND VERTICAL LOAD TRANSFER. CUT UNITS SHALL BE A MINIMUM OF 20 INCHES WIDE AT THE CUT. ALL EDGES SHALL BE FORMED OR NEATLY SAW CUT.
2. PRECAST CONCRETE HOLLOW CORE DECK UNITS SHALL BE DESIGNED TO SUPPORT THE IN-SERVICE CONDITIONS SPECIFIED, IN ADDITION TO ANY OTHER LOADINGS SPECIFIED IN THE DRAWINGS. THE PRECAST CONTRACTOR SHALL SUBMIT COMPLETE DESIGN CALCULATIONS AND SHOP DRAWINGS FOR THE PRECAST MEMBERS TO THE STRUCTURAL ENGINEER FOR REVIEW. THE DESIGN CALCULATIONS AND SHOP DRAWINGS SHALL BEAR THE SEAL OF THE RESPONSIBLE PROFESSIONAL ENGINEER REGISTERED IN STATE WHERE THE CONSTRUCTION TAKES PLACE. THE DESIGN FOR THE UNITS SHALL BE SUBMITTED CLEARLY INDICATING THE DESIGN LOADINGS, PROPERTIES OF THE UNITS, MATERIAL PROPERTIES, CAMBERS, IMMEDIATE AND LONG TERM DEFLECTIONS, WEIGHTS, AND OTHER PERTINENT ASSUMPTIONS AND DESIGN INFORMATION.
3. TENSION STRESSES IN PRECOMPRESSED TENSION ZONES IN CONCRETE AT SERVICE LOADS AFTER ALLOWANCE FOR ALL PRESTRESS LOSSES SHALL NOT EXCEED 7.5 TIMES THE SQUARE ROOT OF F'C. WHEN THE TENSION STRESSES EXCEED 6 TIMES THE SQUARE ROOF OF F'C, DELFECTION ANALYSIS OF MEMBERS SHALL BE BASED ON BILINEAR MOMENT-DEFLECTION RELATIONSHIPS.
4. COMPOSITE TOPPING SLAB THICKNESS WHERE NOTED ON PLANS SHALL BE A MINIMUM OF 2 INCHES THICK UNLESS NOTED OTHERWISE IN THE DRAWINGS. THE TOPPING SLAB SHALL BE REINFORCED WITH 6X6-W1.4 X W1.4 WELDED WIRE FABRIC. THE TOP SURFACE OF THE PRECAST CONCRETE HOLLOW CORE DECK UNITS SHALL BE SATURATED WITH WATER PRIOR TO PLACEMENT OF THE COMPOSITE TOPPING.
5. CARE SHALL BE TAKEN IN THE DESIGN AND FABRICATION OF THE PRECAST HOLLOW CORE DECK UNITS TO ENSURE DIFFERENTIAL CAMBERS BETWEEN ADJACENT UNITS DO NOT EXCEED MAGNITUDES THAT MAY BE SAFELY LEVELED USING ADDITIONAL TOPPING CONCRETE. THE USE OF SUCH ADDITIONAL TOPPING CONCRETE SHALL NOT EXCEED THE LOAD CARRYING CAPACITY OF THE FLOOR SYSTEM NOR DAMAGE THE INDIVIDUAL HOLLOW CORE UNITS.
6. THE PRECAST CONCRETE HOLLOW CORE DECK UNIT MANUFACTURER SHALL INVESTIGATE THE HANDLING AND SHIPPING STRESSES THAT THE DECK MEMBERS ARE SUBJECTED TO AND SHALL PROVIDE ADDITIONAL REINFORCEMENT IN UNITS AS REQUIRED. THE PRECAST MANUFACTURER SHALL LOCATE, SIZE, AND DETAIL LIFTING INSERTS FOR THE PRECAST UNITS.
7. ADDITIONAL STRUCTURAL COMPONENTS SUCH AS TEMPORARY BEAMS, COLUMNS OR BRACING SYSTEMS REQUIRED FOR THE ERECTION OF THE PRECAST UNITS SHALL BE DESIGNED AND DETAILED BY THE PRECAST ERECTOR.
8. BEARING PADS SHALL BE STRUCTURAL GRADE MULTIPOLYMER STRIPS 1/8 INCH THICK, MANUFACTURED EXPRESSLY FOR THIS PURPOSE.
9. LIFTING HOLES, VERTICAL JOINTS, HORIZONTAL JOINTS, POCKETS FOR ANCHOR DEVICES AT SHEAR WALLS AND OTHER ELEMENTS ARE TO BE FILLED WITH GROUT AND TROWELED AND FINISHED TO MATCH ADJACENT FINISHES.
10. FIELD CUT HOLES THROUGH PRECAST HOLLOW CORE DECK UNITS SHALL BE REVIEWED BY WILEY| WILSON, INC. AND BY THE PRECAST CONCRETE HOLLOW CORE DECK UNIT ENGINEER PRIOR TO CUTTING OR DRILLING OF THE UNITS.
11. MANUFACTURING CONTROLS, DIMENSIONS, TOLERANCES, ETC. SHALL CONFORM TO THE REQUIREMENTS OF PCI MNL-116 "MANUAL FOR QUALITY CONTROL FOR PLANTS AND PRODUCTION OF PRECAST PRESTRESSED CONCRETE PRODUCTS".
12. INSTALLATION OF THE PRECAST CONCRETE HOLLOW CORE DECK UNITS SHALL CONFORM TO THE RECOMMENDATIONS OF THE MANUFACTURER.

J. PRECAST INSULATED CONCRETE WALL PANELS

1. PRECAST CONCRETE HOLLOW CORE DECK UNITS SHALL BE DESIGNED TO SUPPORT THE IN-SERVICE CONDITIONS SPECIFIED, IN ADDITION TO ANY OTHER LOADINGS SPECIFIED IN THE DRAWINGS. THE PRECAST CONTRACTOR SHALL SUBMIT COMPLETE DESIGN CALCULATIONS AND SHOP DRAWINGS FOR THE PRECAST MEMBERS TO THE STRUCTURAL ENGINEER FOR REVIEW. THE DESIGN CALCULATIONS AND SHOP DRAWINGS SHALL BEAR THE SEAL OF THE RESPONSIBLE PROFESSIONAL ENGINEER REGISTERED IN STATE WHERE THE CONSTRUCTION TAKES PLACE. THE DESIGN FOR THE UNITS SHALL BE SUBMITTED CLEARLY INDICATING THE DESIGN LOADINGS, PROPERTIES OF THE UNITS, MATERIAL PROPERTIES, CAMBERS, IMMEDIATE AND LONG TERM DEFLECTIONS, WEIGHTS, AND OTHER PERTINENT ASSUMPTIONS AND DESIGN INFORMATION.
2. MANUFACTURING CONTROLS, DIMENSIONS, TOLERANCES, ETC. SHALL CONFORM TO THE REQUIREMENTS OF PCI MNL-116 "MANUAL FOR QUALITY CONTROL FOR PLANTS AND PRODUCTION OF PRECAST PRESTRESSED CONCRETE PRODUCTS".
3. INSTALLATION OF THE PRECAST CONCRETE HOLLOW CORE DECK UNITS SHALL CONFORM TO THE RECOMMENDATIONS OF THE MANUFACTURER.

K. MASONRY

1. ALLOWABLE STRESSES USED IN DESIGN ARE BASED ON QUALITY ASSURANCE PROVISION INDICATED. VERIFY COMPRESSIVE STRENGTH BY THE UNIT STRENGTH METHOD.
2. REINFORCE ALL JAMB CELLS, CORNER CELLS, TEE CELLS, END CELLS AND AT EACH SIDE OF CONTROL JOINTS FULL HEIGHT - MATCH TYPICAL WALL REINFORCING UNLESS SHOWN OTHERWISE.
3. SECURE REINFORCEMENT AGAINST DISPLACEMENT USING BAR POSITIONING DEVICES AT 48".
4. GROUT ALL CELLS THAT INCLUDE REINFORCEMENT, ANCHORS OR STRUCTURAL EMBEDMENTS. PLACE GROUT IN 48" LIFTS. CONSOLIDATE ALL GROUT PLACEMENTS BY MECHANICAL VIBRATION. PROVIDE CLEANOUTS FOR TOTAL GROUT PLACEMENT HEIGHT OVER 60".

L. STRUCTURAL STEEL

1. DETAIL, FABRICATE AND ERECT STRUCTURAL STEEL IN ACCORDANCE WITH THE 13th EDITION OF AISC "MANUAL OF STEEL CONSTRUCTION AND AISC CODE OF STANDARD PRACTICE."
2. STEEL TO STEEL BOLTED CONNECTIONS SHALL CONFORM TO THE CURRENT "SPECIFICATIONS FOR STRUCTURAL JOINTS" USING ASTM A325 BOLTS AS ENDORSED BY AISC.
3. ALL EXTERIOR STEEL SHALL BE HOT DIP GALVANIZED.
4. HIGH STRENGTH BOLTS MAY BE INSTALLED TO A "SNUG" TIGHT CONDITION UNLESS INDICATED TO BE FULLY TENSIONED. GENERALLY, BEAM CONNECTIONS HAVE BEEN DESIGNED AS BEARING TYPE AND MAY BE INSTALLED TO A "SNUG" TIGHT CONDITION. FULLY TENSION BOLTS INDICATED AS SUCH BY EMPLOYING ONE OF THE FOLLOWING METHODS:
4.1. TENSION CONTROLLED BOLTS (TWIST-OFF BOLTS) PREFERRED, DIRECT TENSION INDICTOR (TENSION INDICATING WASHERS), OR TURN-OF-THE-NUT WITH COLOR MATCH-MARKING. COORDINATE BOLT TENSIONING WITH ENGINEER / INSPECTOR.
5. PERFORM SHOP AND FIELD WELDING IN ACCORDANCE WITH THE AMERICAN WELDING SOCIETY'S STRUCTURAL WELDING CODE. SHOP OR FIELD WELDS AT NON-BOLTED CONNECTIONS THAT ARE NOT SPECIFICALLY DETAILED SHALL BE 3/16" CONTINUOUS FILLETS AT EACH CONTACT EDGE OR SURFACE.
6. ALL WELDERS SHALL HAVE EVIDENCE OF PASSING THE AWS STANDARD QUALIFICATION TEST FOR THE TYPE OF WORK BEING PERFORMED.
7. NON-DESTRUCTIVE WELD TESTS MAY BE PERFORMED. DEFICIENT WELDS WILL BE CORRECTED BY THE CONTRACTOR AND RE-TESTED AT THEIR EXPENSE.

M. ABBREVIATIONS LIST - (SOME OF THE LISTED ABBREVIATIONS MAY NOT APPEAR ON THE DRAWINGS)

AB	ANCHOR BOLT	HAS	HEADED ANCHOR STUD
ALT	ALTERNATE	HSS	HOLLOW STRUCTURAL SECTION (TUBE STEEL)
BLDG	BUILDING	ISJT	ISOLATION JOINT
BRG	BEARING	LONG	LONGITUDINAL
BTWN	BETWEEN	LF	LINEAL FOOT
CSJT	CONSTRUCTION JOINT	OC	ON CENTER
CNJT	CONTRACTION JOINT	PROJ	PROJECTION
℄	CENTERLINE	REINF	REINFORCEMENT / REINFORCING
CLR	CLEAR	REQ	REQUIRED
CMU	CONCRETE MASONRY UNIT	SPA	SPACE / SPACES
COL	COLUMN	SIM	SIMILAR
CONN	CONNECTION / CONNECTOR	STR	STIRRUP
CONT	CONTINUE / CONTINUOUS	STIFF	STIFFENER
DBA	DEFORMED BAR ANCHOR	THK	THICK/THICKNESS
EXP	EXPANSION	TRANS	TRANSVERSE
FV	FIELD VERIFY	TYP	TYPICAL
GALV	GALVANIZED	UNO	UNLESS NOTED OTHERWISE
HORZ	HORIZONTAL	VERT	VERTICAL

FINISH SCHEDULE

APPLICATION	PAINT SYSTEM	COLOR/FINISH
EXTERIOR PRE-CAST WALL PANELS	N/A	MATCH EXISTING BUILDING BRICK FINISH
EXTERIOR EXPOSED METALS	SSPC SP6 SURFACE PREPARATION; RUST INHIBITIVE PRIMER 1 COAT 2 MDFT; ALKYD ENAMEL 2 COATS, 4 MDFT	"MBCI" – SLATE GRAY
EXTERIOR CONCRETE AND CMU	SSPC SP13 SURFACE PREPARATION; BLOCK FILLER 1 COAT 75 SPFG; HIGH BUILD ACRYLIC (SMOOTH) 2 COATS 16 MDFT	ATCH "THORO" LIGHT KHAKI 411M
INTERIOR PRE-CAST WALL PANELS, CONCRETE AND CMU	SSPC SP13 SURFACE PREPARATION; BLOCK FILLER 1 COAT 75 SPFG; ACRYLIC LATEX (SEMI-GLOSS) 2 COATS 240 SFPGPC	SHERWIN WILLIAMS SW 7008 ALABASTER
INTERIOR CONCRETE FLOORS	SSPC SP13 SURFACE PREPARATION; EPOXY NON-SKID (AGREGATED) 1 COAT 160 SFPG	SHERWIN WILLIAMS SW 7008 ALABASTER
INTERIOR EXPOSED METALS	SSPC SP-10 SURFACE PREPARATION; EPOXY PRIMER - FERROUS METAL 1 COAT 2.5 MDFT; POLYURETHANE ENAMEL 1 COAT 3 MDFT	SHERWIN WILLIAMS SW 7008 ALABASTER

Wiley|Wilson
Constant Progress
127 Nationwide Drive, Lynchburg, Virginia 24502-4272
phone 434.947.0901 | fax 434.947.1801 | web wwpwilson.com

PRE-FINAL REVIEW
NOT FOR
CONSTRUCTION

CITY OF HARRISONBURG
NORTH RIVER PUMP STATION
UPGRADE
BRIDGEWATER, VIRGINIA

MRK	DATE	REVISION DESCRIPTION

COMM NO: 213110
DATE: 12/13/2013
DRAWN: JWR DESIGN: JWR
CHECK: WMD
SHEET TITLE
STRUCTURAL GENERAL NOTES
SHT. NO. S-001
REV. NO. 0

X:\2013\213110 HBURG N RIVER PS 2013 UPGRADE\CAD\STRUC\NOTES.DWG 12/13/2013 10:53 AM

PLAN NOTES:

1. FIELD VERIFY ALL EXISTING DIMENSIONS AND CONSTRUCTION PRIOR TO START OF CONSTRUCTION. NOTIFY ENGINEER IMMEDIATELY OF ANY DISCREPANCIES.
2. (X' - X") INDICATES ELEVATION ABOVE EXISTING FLOOR. REFERENCE 0' -0" = 1165.0 DATUM POINT.
3. COORDINATE FLOOR OPENINGS WITH MECHANICAL AND ELECTRICAL DRAWINGS.
4. TRANSFORMER PLATFORM DESIGN BASED ON APPROXIMATE TRANSFORMER SIZE OF 7' - 7" x 7' - 8" WITH 30" METERING CABINET AND APPROXIMATE WEIGHT OF 16,000 LBS INCLUDING OIL. COORDINATE FINAL PLATFORM DIMENSIONS WITH DOMINION POWER TRANSFORMER SELECTION. IF WEIGHT EXCEEDS 16,000 LBS, NOTIFY STRUCTURAL ENGINEER TO VERIFY STRUCTURAL CAPACITY OF PLATFORM. COORDINATE FINAL PLATFORM WITH DOMINION POWER STANDARDS.
5. OPENINGS IN HOLLOW CORE PLANKS LARGER THAN 10 INCHES IN ANY DIRECTION SHALL BE COORDINATED WITH THE HOLLOW CORE MANUFACTURER AND SHOWN ON SHOP DRAWINGS.
6. EXISTING BUILDING: REMOVE WOOD PARTITION WALL. PATCH AS NECESSARY. CLEAN AND PAINT INTERIOR WALLS, FLOOR, PIPING, SCREEN WASH UNIT AND CEILING.

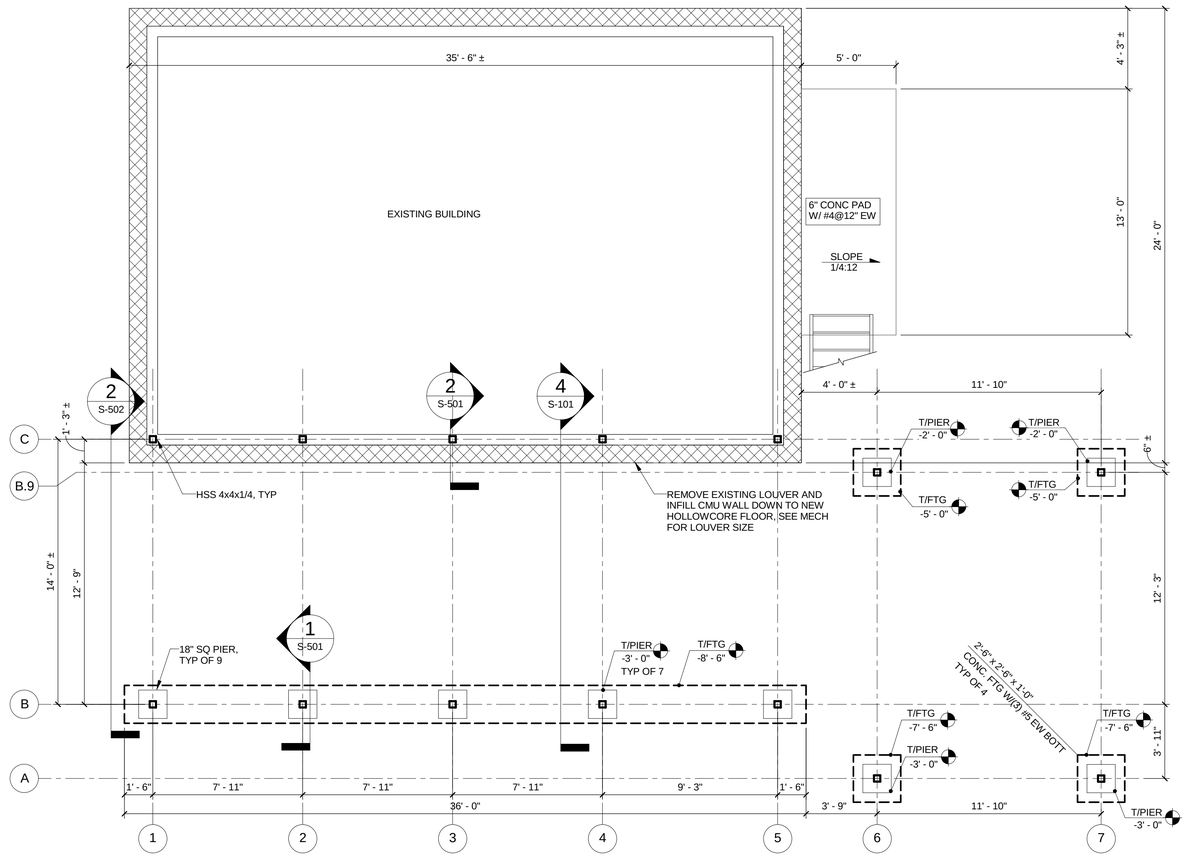

FOUNDATION PLAN

SCALE: 1/4" = 1'-0"

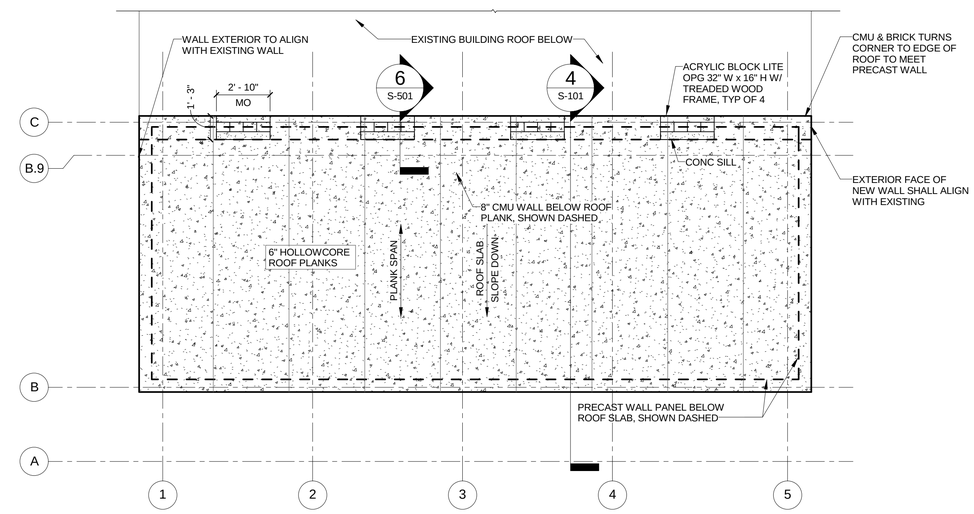

ROOF FRAMING PLAN

SCALE: 1/4" = 1'-0"

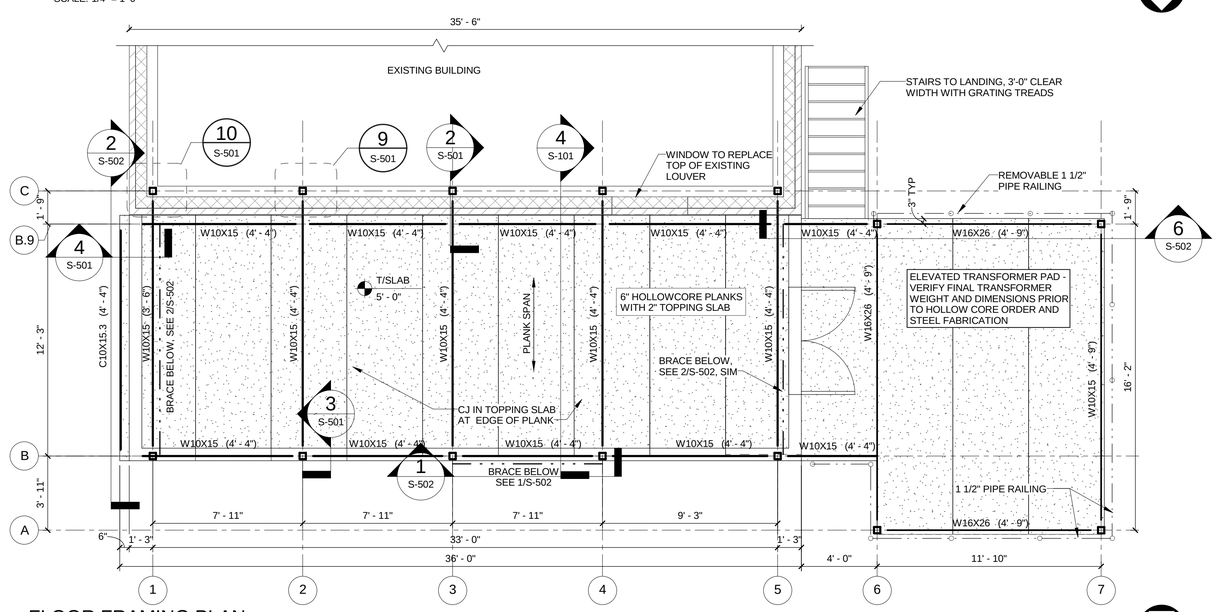

FLOOR FRAMING PLAN

SCALE: 1/4" = 1'-0"

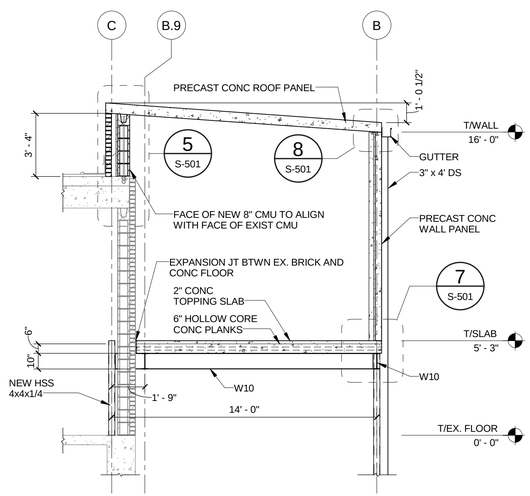

4 BUILDING SECTION

S-101 SCALE: 1/4" = 1'-0"

Wiley|Wilson® Constant Progress
127 Nationwide Drive, Lynchburg, Virginia 24502-4272
phone 434-947-1601 | fax 434-947-1601 | web wileywilson.com

PRE-FINAL REVIEW NOT FOR CONSTRUCTION

CITY OF HARRISONBURG

NORTH RIVER PUMP STATION UPGRADE

BRIDGEWATER, VIRGINIA

MRK	DATE	REVISION DESCRIPTION
0	12/13/2013	

COMM NO: 213110

DATE: 12/13/2013

DRAWN: JWR DESIGN: JWR

CHECK: WMD

SHEET TITLE

PLANS & BUILDING SECTION

SHT. NO: S-101 REV. NO. 0

12/13/2013 11:22:38 AM
C:\Users\jrosser\Documents\S-213110_jrosser.rvt

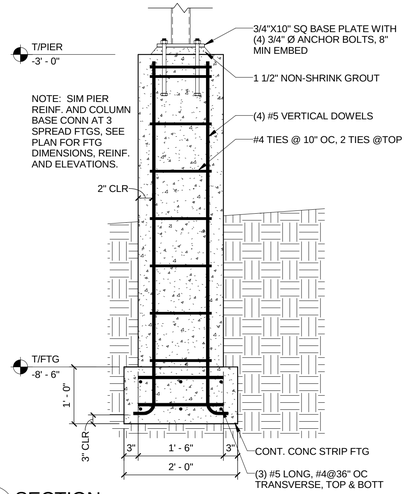

1 SECTION
S-101 SCALE: 3/4" = 1'-0"

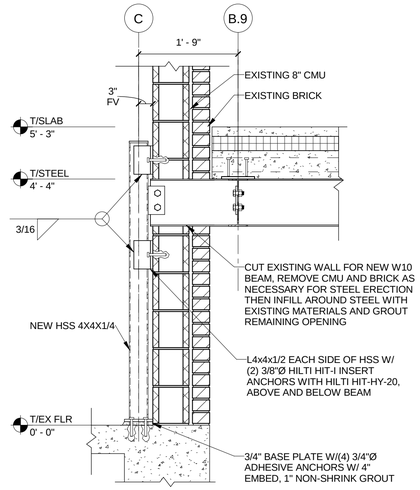

2 SECTION
S-101 SCALE: 3/4" = 1'-0"

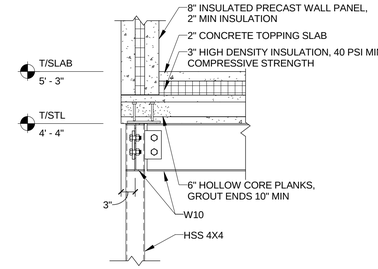

NOTE: SEE DETAIL 7/S-501 FOR FLASHING AND WALL CONNECTION DETAIL

3 SECTION
S-101 SCALE: 3/4" = 1'-0"

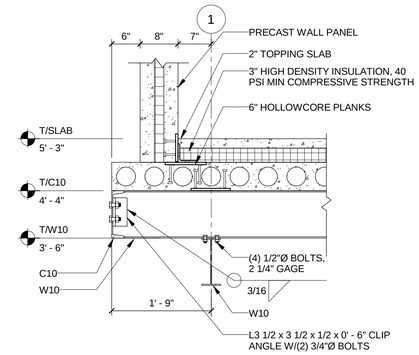

4 SECTION
S-101 SCALE: 3/4" = 1'-0"

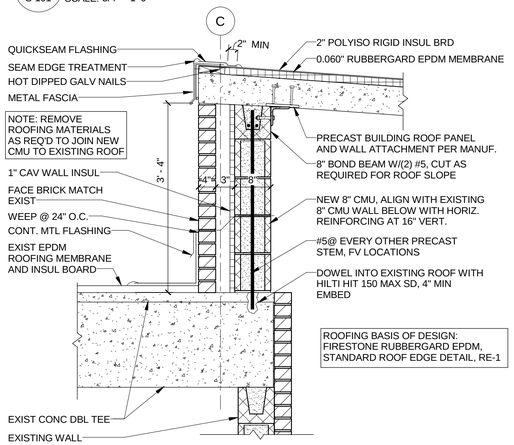

5 DETAIL
S-101 SCALE: 3/4" = 1'-0"

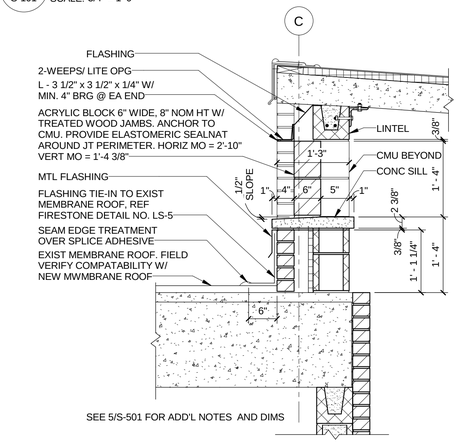

6 SECTION
S-101 SCALE: 3/4" = 1'-0"

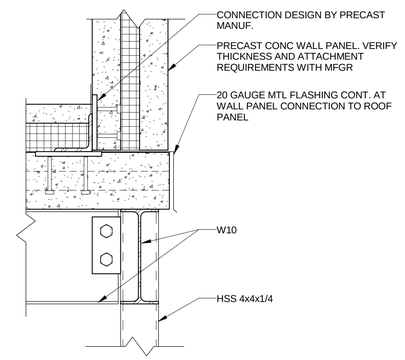

7 DETAIL
S-101 SCALE: 1 1/2" = 1'-0"

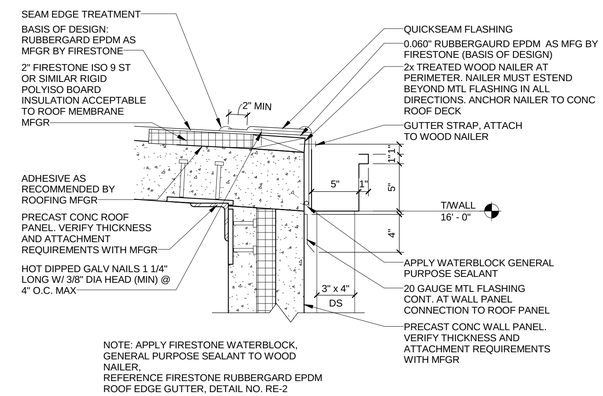

8 DETAIL
S-101 SCALE: 1 1/2" = 1'-0"

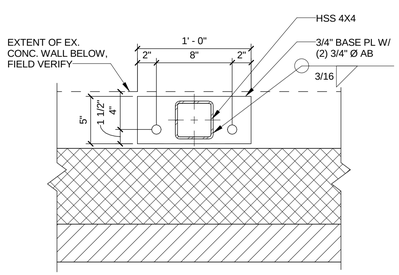

9 TYP INTERIOR BASE PLATES
S-101 SCALE: 1 1/2" = 1'-0"

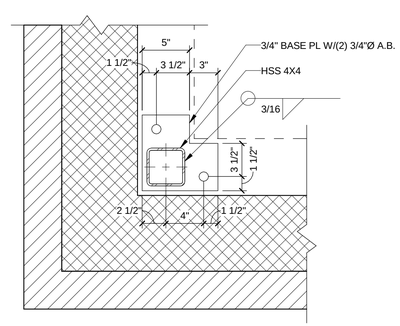

10 CORNER BASE PLATES
S-101 SCALE: 1 1/2" = 1'-0"

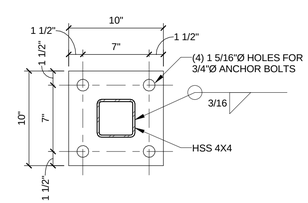

11 BASE PLATE AT PIER
SCALE: 1 1/2" = 1'-0"

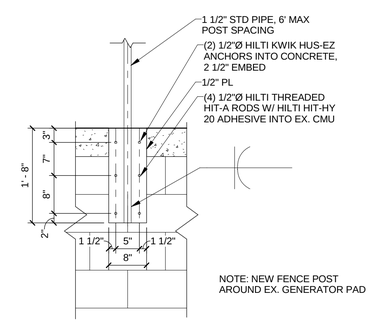

12 FENCE POST
SCALE: 3/4" = 1'-0"

Wiley|Wilson®
Constant Progress
127 Nationwide Drive, Lynchburg, Virginia 24502-4272
phone 434-947-1901 | fax 434-947-1601 | web wileywilson.com

PRE-FINAL REVIEW
NOT FOR
CONSTRUCTION

CITY OF HARRISONBURG
NORTH RIVER PUMP STATION UPGRADE
BRIDGEWATER, VIRGINIA

MRK	DATE	REVISION DESCRIPTION
0	12/13/2013	

COMM NO: 213110
DATE: 12/13/2013
DRAWN: JWR DESIGN: JWR
CHECK: WMD
SHEET TITLE
SECTIONS & DETAILS

SHT. NO: S-501
REV. NO. 0

12/13/2013 11:08:45 AM
C:\Users\jrosser\Documents\S-213110_jrosser.rvt

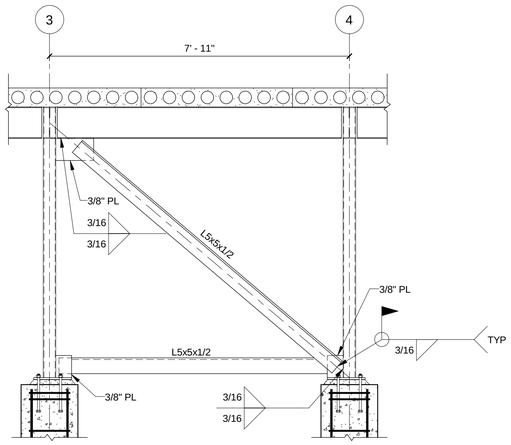

1 BRACE @ CL A
S-101 SCALE: 1/2" = 1'-0"

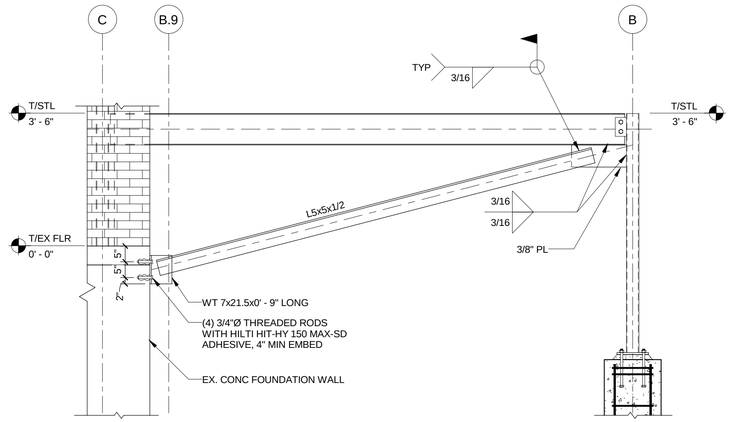

2 BRACE @ CL 1 & CL 5
S-101 SCALE: 1/2" = 1'-0"

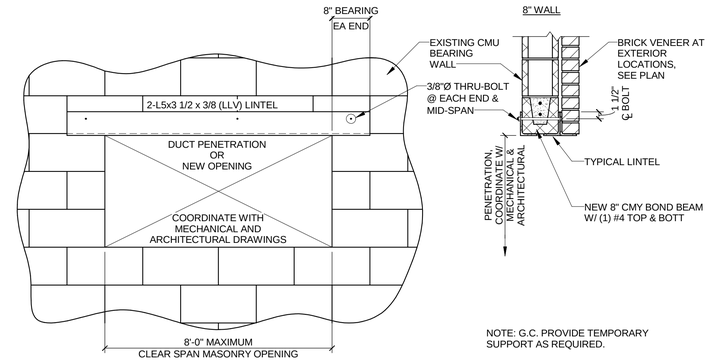

NOTE: G.C. PROVIDE TEMPORARY SUPPORT AS REQUIRED.

3 TYP ANGLE LINTEL
SCALE: 3/4" = 1'-0"

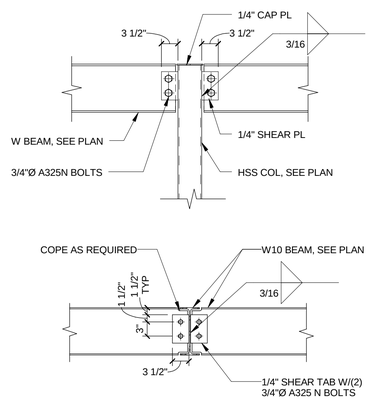

4 TYP BEAM CONN
SCALE: 3/4" = 1'-0"

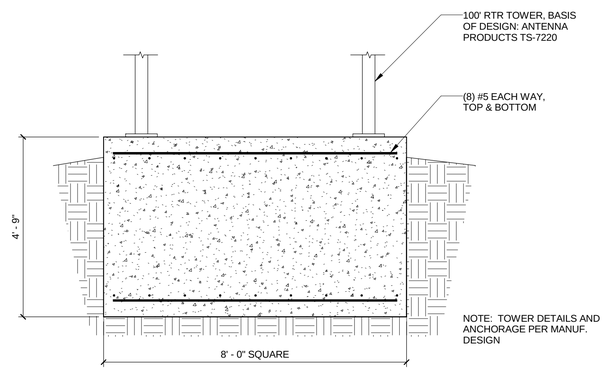

5 TOWER BASE
SCALE: 1/2" = 1'-0"

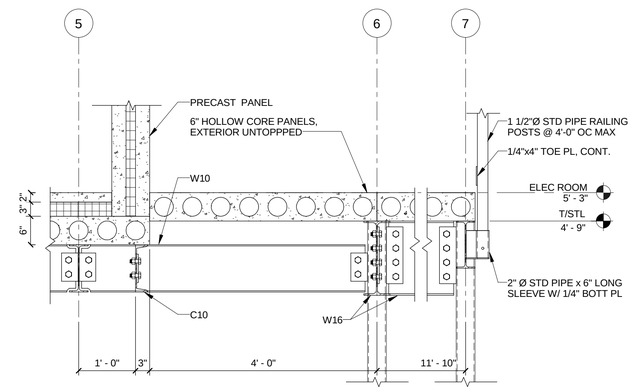

6 SECTION
S-101 SCALE: 3/4" = 1'-0"

Wiley|Wilson®
Constant Progress
127 Nationwide Drive, Lynchburg, Virginia 24502-4272
phone 434-847-1601 | fax 434-947-1601 | web wileywilson.com

PRE-FINAL REVIEW
NOT FOR
CONSTRUCTION

CITY OF HARRISONBURG
NORTH RIVER PUMP STATION
UPGRADE
BRIDGEWATER, VIRGINIA

MRK	DATE	REVISION DESCRIPTION
0	12/13/2013	

COMM NO: 213110
DATE: 12/13/2013
DRAWN: JWR DESIGN: JWR
CHECK: WMD
SHEET TITLE
SECTIONS & DETAILS

SHT. NO: S-502
REV. NO. 0

12/13/2013 11:09:05 AM
C:\Users\jrosser\Documents\S-213110_jrosser.rvt

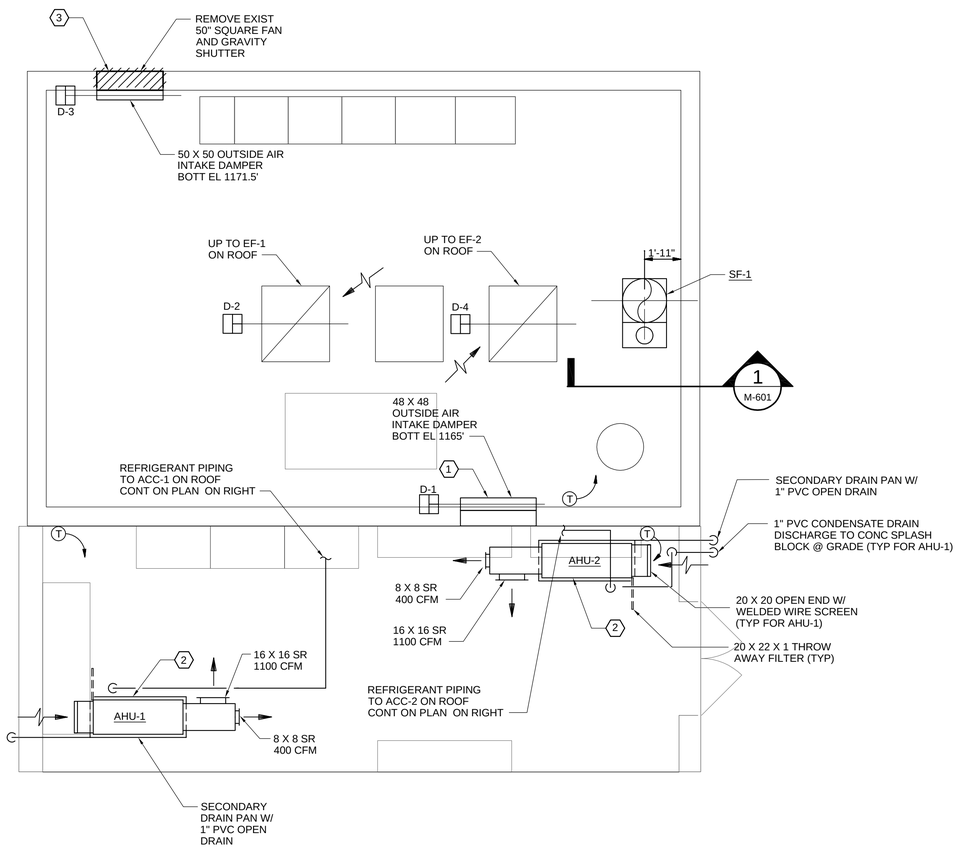

FLOOR PLAN - HVAC

SCALE: 1/4" = 1'-0"

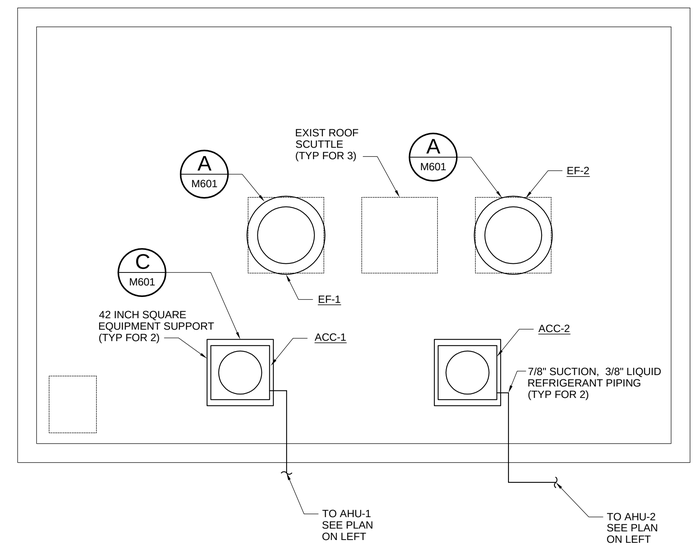

ROOF PLAN - HVAC

SCALE: 1/4" = 1'-0"

MECHANICAL NOTES:

1. REMOVE EXIST 48 X 128 LOUVER AND INSTALL NEW 50 X 48 X 4" ALUMINUM LOUVER IN EXIST OPENING. SEE STRUCTURAL DRAWINGS FOR ADDITIONAL DETAILS.
2. SUSPEND AIR HANDLING UNITS FROM ROOF STRUCTURE, BOTTOM ELEVATION 8'-6" AFF.
3. REMOVE EXIST FAN AND SHUTTER. REPLACE WITH NEW 50" X 50" X 4" ALUMINUM LOUVER AND MOTORIZED DAMPER.

IF THIS DRAWING IS REDUCED,
GRAPHIC SCALE MUST BE USED

0 2' 4' 8'

SCALE: 1/4" = 1'-0"

Wiley|Wilson®
Constant Progress
127 Nationwide Drive, Lynchburg, Virginia 24502-4272
phone 434-947-1901 | fax 434-947-1801 | web wileywilson.com

PRE-FINAL REVIEW
NOT FOR
CONSTRUCTION

CITY OF HARRISONBURG

NORTH RIVER PUMP STATION
UPGRADE

BRIDGEWATER, VIRGINIA

MRK	DATE	REVISION DESCRIPTION

COMM NO: 213110	
DATE: 12/13/2013	
DRAWN: MOD	DESIGN: JLG
CHECK: DAN	
SHEET TITLE	
FLOOR AND ROOF PLAN - HVAC	
SHT. NO. M-101	REV. NO. 0

X:\2013\213110 HBURG N RIVER PS 2013 UPGRADE\CAD\MECH\213110M101.DWG 12/13/2013 8:55 AM

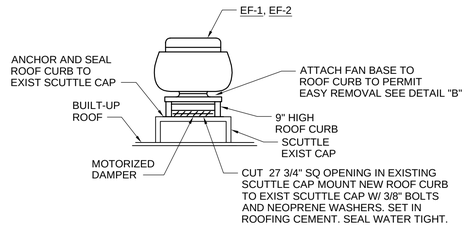

DETAIL A
NOT TO SCALE

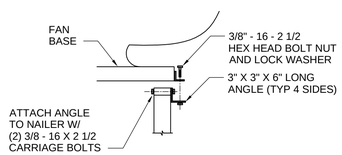

DETAIL B
NOT TO SCALE

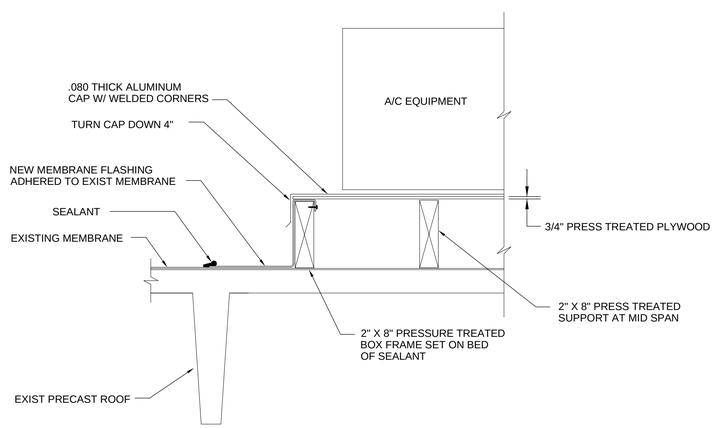

EQUIPMENT SUPPORT DETAIL C
NOT TO SCALE

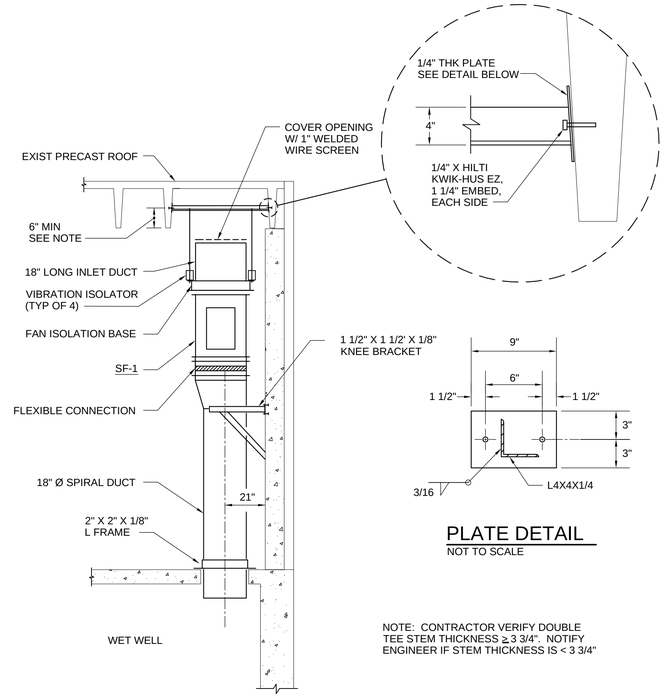

SECTION 1
SCALE: 3/8" = 1'
M-101

PLATE DETAIL
NOT TO SCALE

NOTE: CONTRACTOR VERIFY DOUBLE TEE STEM THICKNESS ≥ 3 3/4". NOTIFY ENGINEER IF STEM THICKNESS IS < 3 3/4"

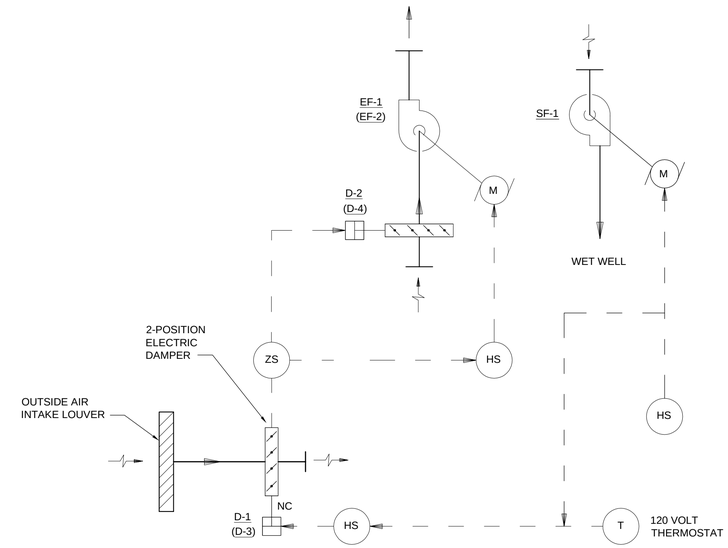

SEQUENCE OF OPERATION

1. SPACE TEMPERATURE CONTROL SEQUENCE:
   WHENEVER THE SPACE TEMPERATURE RISES ABOVE 80°F (ADJ), INTAKE LOUVER DAMPER MOTOR D-1 (D-3) SHALL OPEN THE INTAKE AIR DAMPER. WHEN THE INTAKE AIR DAMPER IS FULLY OPEN AS SENSED BY THE END SWITCH ZS, EXHAUST FAN EF-1 (EF-2) AND EXHAUST AIR DAMPER D-2 (D-4) SHALL BE ENERGIZED. THE REVERSE SHALL OCCUR IN A FALLING SPACE TEMPERATURE. FAN EF-2 SHALL OPERATE THE SAME WAY EXCEPT THE SETPOINT SHALL BE 85°F (ADJ).
2. WET WELL VENTILATION SEQUENCE:
   STARTING SF-1 SHALL BE A MANUAL OPERATION BY DEPRESSING THE START BUTTON ON THE COMBINATION STARTER (PROVIDED BY ELECTRICAL CONTRACTOR). THIS ACTION SHALL INTIATE THE OPENING OF DAMPER D-1 AND SUBSEQUENT STARTING OF FAN EF-1 AS DESCRIBED IN THE SPACE TEMPERATURE CONTROL SEQUENCE ABOVE.

EF-1,EF-2 AND SF-1 SEQUENCE DIAGRAM
NOT TO SCALE

AIR COOLED CONDENSING UNIT SCHEDULE

DESIGNATION	*ACC -1	ACC -2
MANUFACTURER	TRANE	TRANE
MODEL NUMBER	4TTA3048D3	4TTA3048D3
COOLING CAPACITY BTUH @ 95 DEG F OUTDOOR	48,000	48,000
NUMBER OF COMPRESSORS	1	1
OPERATING VOLTAGE/PHASE	230/3	230/3
MIN CIRCUIT AMPACITY	18	18
MAX FUSE SIZE	30	30
REFRIGERANT	R-410A	R-410A
MATCHING INDOOR UNIT	AHU-1	AHU-2
REMARKS: PROVIDE ANT-SHORT CYCLE TIMER AND LOW AMBIENT KIT. PROVIDE EXTREME CONDITION MOUNTING KIT		

*PROVIDE EMERGENCY POWER

AIR HANDLER SCHEDULE

	DESIGNATION	*AHU -1	AHU -2	
	AREA SERVED	ELECTRIC ROOM	ELECTRIC ROOM	
	MANUFACTURER	TRANE	TRANE	
	MODEL NUMBER	GAM2A0C48S41SA	GAM2A0C48S41SA	
	UNIT ARRANGEMENT & TYPE	HORIZ - INDOOR	HORIZ - INDOOR	
	FAN CAPACITY - CFM	1,500	1,500	
COOLING	TOTAL CAPACITY - BTUH	45,000	45,000	
COOLING	SENSIBLE CAPACITY - BTUH	32,665	32,665	
COOLING	ENT AIR TEMPERATURE - DB/WB	75/63	75/63	
COOLING	LVG AIR TEMPERATURE - DB/WB	54.7/52.5	54.7/52.5	
HEATING	HEAT TYPE	ELECTRIC	ELECTRIC	
HEATING	CAPACITY - KW	9.6	9.6	
HEATING	VOLTAGE/PHASE	230/3	230/3	
HEATING	MINIMUM CIRCUIT AMPACITY	28	28	
HEATING	MAX OVERLOAD PROTECTION - AMPS	30	30	
FAN MOTOR	HORSEPOWER	0.5	0.5	
FAN MOTOR	VOLTAGE/PHASE	SEE REMARKS	SEE REMARKS	
FAN MOTOR	DRIVE	DIRECT	DIRECT	
CONTROL	TYPE SENSOR	ROOM T-STAT	ROOM T-STAT	
FILTER		SEE REMARKS	SEE REMARKS	

REMARKS:
1. FABRICATE SIDE ACCESS FILTER HOUSING FOR 22 X 20 X 1 FILTER
2. AIR HANDLER IS POWERED FROM ELECTRIC HEATER THROUGH POLARIZED PLUG PROVIDED.

*PROVIDE EMERGENCY POWER

FAN SCHEDULE

DESIGNATION	*EF-1	EF-2	SF-1
AREA SERVED	PUMP ROOM	PUMP ROOM	WET WELL
FAN TYPE	UPBLAST CENTRIFUGAL EXHAUST		IN-LINE
MANUFACTURER	LOREN COOK	LOREN COOK	LOREN COOK
MODEL NUMBER	270ACRH9B	270ACRH9B	150 QMX
CAPACITY - CFM	7,195	7,195	5,000
STATIC PRESSURE - INCHES H2O	0.5	0.5	0.625
MOTOR HORSEPOWER	2	2	2
FAN SPEED - RPM	872	872	2000
DRIVE	BELT	BELT	BELT
FAN WHEEL DIAMETER - INCHES	27	27	15
ELECTRICAL VOLTAGE/PHASE	480/3	480/3	480/3
REMARKS: PROVIDE MODEL RCG-34 ROOF CURB AND MOTORIZED DAMPER			MOUNTING RAILS AND SPRING ISOLATORS

*PROVIDE EMERGENCY POWER

IF THIS DRAWING IS REDUCED, GRAPHIC SCALE MUST BE USED
0 2' 4' 6'
SCALE: 3/8" = 1'-0"

Wiley|Wilson® Constant Progress
127 Nationwide Drive, Lynchburg, Virginia 24502-4272
phone 434.947.1901 | fax 434.947.1801 | web wileywilson.com

PRE-FINAL REVIEW NOT FOR CONSTRUCTION

CITY OF HARRISONBURG
NORTH RIVER PUMP STATION UPGRADE
BRIDGEWATER, VIRGINIA

MRK	DATE	REVISION DESCRIPTION

COMM NO: 213110
DATE: 12/13/2013
DRAWN: MOD DESIGN: JLG
CHECK: DAN
SHEET TITLE
SCHEDULES, DETAILS AND DIAGRAMS
SHT. NO. M-601 REV. NO. 0

X:\2013\213110 HBURG N RIVER PS 2013 UPGRADE\CAD\MECH\213110M601.DWG 12/13/2013 9:03 AM

LEGEND

- CONDUIT RUN CONCEALED IN FINISHED AREAS AND EXPOSED IN UNFINISHED AREAS.
- CONDUIT RUN BELOW GRADE OR IN SLAB AS INDICATED
- UGE — UTILITY POWER SERVICE CONDUCTORS RUN BELOW GRADE
- OHE — OVERHEAD UTILITY POWER LINE
- OHT — UTILITY TELEPHONE SERVICE CONDUCTORS RUN OVERHEAD
- CONDUIT TURNING UP
- CONDUIT TURNING DOWN
- TICK MARKS: INDICATE NUMBER OF CONDUCTORS IN A CONDUIT IN ADDITION TO EGC. NO TICK MARKS INDICATE TWO CONDUCTORS IN ADDITION TO EGC
- P1-1 — CONDUIT HOMERUN TO PANEL, NO. OF ARROWS INDICATE NUMBER OF CIRCUITS, TEXT INDICATES PANEL AND CIRCUIT NUMBER
- A — 1'X4' LIGHTING FIXTURE, LETTER INDICATES TYPE
- B — WALL MOUNTED FIXTURE, LETTER INDICATES TYPE
- EM — BATTERY EMERGENCY LIGHT, LETTER INDICATES TYPE
- X1 — WALL MOUNTED EXIT LIGHT WITH DIRECTIONAL ARROWS AS INDICATED, LETTER INDICATES TYPE
- S — SINGLE POLE SWITCH
- 208/120V, 3PH, 4W PANELBOARD
- XXX — NEMA 5-20R DUPLEX RECEPTACLE, ABBREVIATION AS APPLICABLE
- TELECOM WALL OUTLET
- DATA AND TELECOM WALL OUTLET
- M — MOTOR
- NON-FUSIBLE DISCONNECT SWITCH, 30A, UNLESS NOTED OTHERWISE. 2 OR 3 POLE, AS APPLICABLE
- COMBINATION MOTOR STARTER
- VFD — VARIABLE FREQUENCY DRIVE
- FACP — FIRE ALARM CONTROL PANEL
- E 15 — FIRE ALARM SYSTEM COMBINATION HORN AND STROBE LIGHT- NUMBER INDICATES MINIMUM ALLOWABLE CANDELA RATING OF STROBE LIGHT
- E 15 — FIRE ALARM SYSTEM STROBE LIGHT- NUMBER INDICATES MINIMUM ALLOWABLE CANDELA RATING
- F — FIRE ALARM SYSTEM MANUAL PULL STATION
- S — FIRE ALARM SYSTEM SMOKE DETECTOR
- H — FIRE ALARM SYSTEM HEAT DETECTOR

ONE LINE DIAGRAM

- FUSE
- NORMALLY OPEN CONTACT
- MOLDED CASE CIRCUIT BREAKER
- SWITCH
- POWER TRANSFORMER
- OVERLOAD RELAY
- CURRENT TRANSFORMER
- AUTOMATIC TRANSFER SWITCH
- EQUIPMENT/MATERIAL TO BE DEMOLISHED

GENERAL NOTES:

1. PROVIDE HANDLE LOCKS ON ALL CIRCUIT BREAKERS SERVING NIGHT LIGHTS, EXIT LIGHTS, EMERGENCY BATTERY LIGHTS, SECURITY AND FIRE ALARM SYSTEM, AND TELECOMMUNICATION ROOM RECEPTACLES.
2. UNLESS NOTED OTHERWISE, MOUNTING HEIGHTS GIVEN ABOVE FINISHED FLOOR ARE TO THE CENTER OF THE DEVICE OR EQUIPMENT, EXCEPT FOR LIGHTING FIXTURES, WHERE MOUNTING HEIGHTS SHALL BE TO THE BOTTOM OF THE FIXTURE.

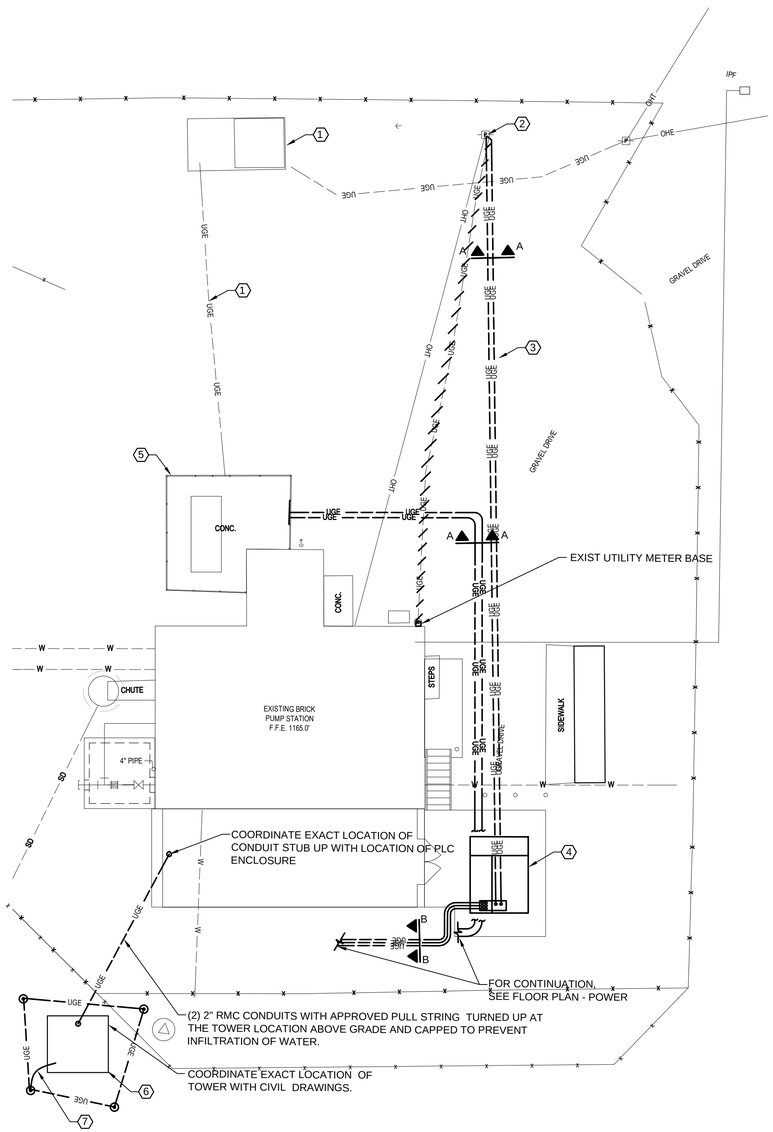

ELECTRICAL SITE PLAN

SCALE: 1" = 10'

ABBREVIATIONS

A, AMP	AMPERES OR AMPLIFIER, AS APPLICABLE
ATS	AUTOMATIC TRANSFER SWITCH
AWG	AMERICAN WIRE GAUGE
BCSD	BARE COPPER, SOFT DRAWN
BKR	BREAKER
BLDG	BUILDING
CFCI	CONTRACTOR FURNISHED, CONTRACTOR INSTALLED
CKT	CIRCUIT
COND	CONDUIT
DWG(S)	DRAWINGS(S)
EGC	EQUIPMENT GROUNDING CONDUCTOR
EXIST	EXISTING
FACP	FIRE ALARM CONTROL PANEL
HP	HORSEPOWER
HZ	HERTZ
kcmil	THOUSAND CIRCULAR MILS
kVA	KILOVOLT AMPERES
kW	KILOWATTS
LED	LIGHT EMITTING DIODE
MAX	MAXIMUM
MIN	MINIMUM
NEMA	NATIONAL ELECTRICAL MANUFACTURER'S ASSOCIATION
NFD	NON-FUSED DISCONNECT
NO.	NUMBER
OFCI	OWNER FURNISHED CONTRACTOR INSTALLED
P	POLE
PNL	PANEL
RMC	RIGID METAL CONDUIT
RMS	ROOT MEAN SQUARE, AS APPLICABLE
SWBD	SWITCHBOARD
SYM	SYMMETRICAL
TYP	TYPICAL
V	VOLT(S)
VFD	VARIABLE FREQUENCY DRIVE
W	WATTS
W/	WITH
XFMR	TRANSFORMER

NOTES:

1. COORDINATE WITH UTILITY COMPANY FOR THE REMOVAL OF EXISTING 19.2/2300V PAD MOUNTED TRANSFORMER AND SWITCH. REMOVE EXISTING SECONDARY CONDUCTORS BACK TO EXISTING SWITCHGEAR IN PUMP STATION.
2. COORDINATE WITH UTILITY COMPANY FOR THE REMOVAL OF EXISTING 19.2/480V POLE MOUNTED TRANSFORMER. REMOVE EXISTING SECONDARY CONDUCTORS BACK TO EXISTING UTILITY METER BASE.
3. PROVIDE REINFORCED DUCTBANK FROM EXISTING UTILITY POLE TRANSITION TO VERTICAL RIGID CONDUIT TO NEW UTILITY PROVIDED TRANSFORMER. MOUNT ON ELEVATED CONCRETE PLATFORM. SEE "TYPICAL REINFORCED DUCTBANK" THIS SHEET FOR FURTHER INFORMATION.
4. COORDINATE WITH UTILITY COMPANY FOR SIZING OF CONDUCTOR OPENINGS BELOW TRANSFORMER AND MEDIUM VOLTAGE TERMINATIONS.
5. REMOVE EXISTING 480/2400V TRANSFORMER MOUNTED ON CONCRETE SLAB. INSTALL EXISTING OWNER FURNISHED PORTABLE GENERATOR IN LOCATION SHOWN. CONTRACTOR SHALL REMOVE PORTABLE GENERATOR FROM TRAILER. SEE DWG E-102 FOR FURTHER INFORMATION.
6. CONTRACTOR IS TO PROVIDE A UL LABELED LIGHTNING PROTECTION SYSTEM. THE TOWER AND BUILDING IS TO BE EVALUATED FOR LIGHTNING PROTECTION BASED ON THE GUIDANCE PROVIDED BY RISK ASSESSED BY THE LATEST NFPA STANDARD 780, LIGHTNING PROTECTION CODE. LIGHTNING PROTECTION SYSTEMS SHALL MEET THE MOST RESTRICTIVE REQUIREMENTS OF THE FOLLOWING: NFPA 780, LP1-175, OR UL. THE TOWER AND ADJACENT BUILDING SHALL RECEIVE THE MASTER C LABEL FROM UL AFTER LIGHTNING PROTECTION SYSTEM IS EVALUATED BY UL AND FOUND TO BE ACCEPTABLE. ALL LIGHTNING PROTECTION DEVICES ARE TO BE EXOTHERMALLY CONNECTED TO THE GROUND RING ADJACENT TO THE TOWER. LIGHTNING PROTECTION SYSTEMS SHALL BE INSTALLED IN NON-METALLIC CONDUIT.
7. PROVIDE A GROUND RING AROUND THE TOWER COORDINATE WITH EXISTING AND NEW UTILITIES FOR EXACT LOCATION OF GROUND RING AND GROUND RODS. COORDINATE EXACT LOCATION OF TOWER WITH CIVIL DRAWINGS. GROUND RING TO CONSIST OF FOUR 10' X 3/4" COPPER CLAD GROUND RODS AND A LOOP OF 4/0 AWG BARE COOPER EXOTHERMALLY CONNECTED TO ALL FOUR GROUND RODS. ALSO PROVIDE A 4/0 AWG BARE CONDUCTOR EXOTHERMALLY CONNECTED FROM THE GROUND RING TO ALL THE STEEL SUPPORTS OF THE TOWER.

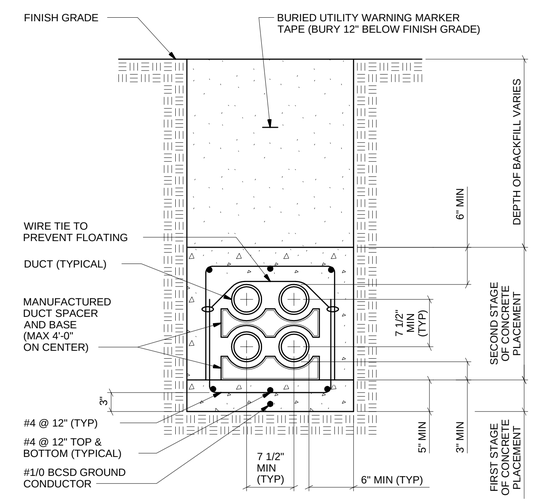

THE DISTANCE BETWEEN ADJACENT DUCTS SHALL BE 7 1/2" IN BOTH ROWS AND COLUMNS. COORDINATE QUANTITY, SIZE OF DUCTS AND CONFIGURATION OF DUCTS WITH PLANS.

TYPICAL REINFORCED DUCTBANK

NOT TO SCALE

SECTION A–A

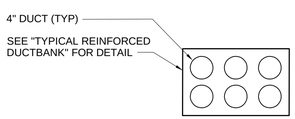

SECTION B–B

DUCTBANK SECTION

NOT TO SCALE

IF THIS DRAWING IS A REDUCTION, GRAPHIC SCALE MUST BE USED.

10' 0 10'

Wiley|Wilson® Constant Progress
127 Nationwide Drive, Lynchburg, Virginia 24502-4272
phone 434.947.1901 | fax 434.947.1921 | web wileywilson.com

PRE-FINAL REVIEW NOT FOR CONSTRUCTION

CITY OF HARRISONBURG
NORTH RIVER PUMP STATION UPGRADE
BRIDGEWATER, VIRGINIA

MRK	DATE	REVISION DESCRIPTION
0	12/13/2013	PRE-FINAL REVIEW

COMM NO: 213110
DATE: 12/13/2013
DRAWN: TFB DESIGN: TFB
CHECK: WPM
SHEET TITLE: ELECTRICAL SITE PLAN
SHT. NO. E-001
REV. NO. 0

X:\2013\213110 HBURG N RIVER PS 2013 UPGRADE\CAD\ELEC\213110_E001.DWG 12/13/2013 2:40 PM

PLC1 I/O SCHEDULE

I/O No.	I/O TYPE	DESCRIPTION	INSTRUMENT TYPE	MOUNTING	CONDUCTOR	QTY	CONDUIT	QTY	OFCI/ CFCI
1	AI	VFD-1, 2, 3 SPEED	VFD ANALOG OUTPUT	N/A	14AWG TSP	3	3/4"	3	OFCI
2	AI	DISCHARGE PRESSURE	ROSEMOUNT 2088	DISCHARGE PIPE	14AWG TSP	1	3/4"	1	CFCI
3	AI	CLEARWELL TURBULANCE	HACH (#2983500)	CLEAR WELL	14AWG TSP	1	3/4"	1	CFCI
4	AI	STATION TEMPERATURE	ECE FAST (#TS-W1P-CAT)	WALL 80"AFF	14AWG TSP	1	3/4"	1	CFCI
5	AI	PU-1, 2, 3 MTR BEARING TEMP	SHIPPED WITH MOTOR	N/A	14AWG TSP	3	3/4"	3	OFCI
6	AI	PU-1, 2, 3 MTR OIL LEVEL	SHIPPED WITH MOTOR	N/A	14AWG TSP	3	3/4"		OFCI
7	AI	PU-1 LOWER AXIS VIBRATION	SHIPPED WITH MOTOR	N/A	14AWG TSP	1	3/4"	1	OFCI
8	AI	PU-1 LOWER AXIS 90 DEG VIBRATION	SHIPPED WITH MOTOR	N/A	14AWG TSP	1	3/4"		OFCI
9	AI	PU-2 LOWER AXIS VIBRATION	SHIPPED WITH MOTOR	N/A	14AWG TSP	1	3/4"	1	OFCI
10	AI	PU-2 LOWER AXIS 90 DEG VIBRATION	SHIPPED WITH MOTOR	N/A	14AWG TSP	1	3/4"		OFCI
11	AI	PU-3 LOWER AXIS VIBRATION	SHIPPED WITH MOTOR	N/A	14AWG TSP	1	3/4"	1	OFCI
12	AI	PU-3 LOWER AXIS 90 DEG VIBRATION	SHIPPED WITH MOTOR	N/A	14AWG TSP	1	3/4"		OFCI
13	AI	PU-1, 2, 3 RUNNING AMPS	VFD ANALOG OUTPUT	N/A	14AWG TSP	3	3/4"	1	OFCI
14	AI	PU-1, 2, 3 RUNNING kW	VFD ANALOG OUTPUT	N/A	14AWG TSP	3	3/4"		OFCI
15	AI	PU-1, 2, 3 PHASE MONITORING	VFD ANALOG OUTPUT	N/A	14AWG TSP	3	3/4"		OFCI
16	AO	VFD-1, 2, 3 SPEED OUTPUT	VFD ANALOG INPUT	N/A	14AWG TSP	3	3/4"	3	OFCI
17	DI	VFD-1 IN AUTOMATIC CONTROL	VFD DIGITAL OUTPUT	N/A	(2) 14AWG	1	3/4"	1	OFCI
18	DI	VFD-1 IN MANUAL CONTROL	VFD DIGITAL OUTPUT	N/A	(2) 14AWG	1	3/4"		OFCI
19	DI	VFD-2 IN AUTOMATIC CONTROL	VFD DIGITAL OUTPUT	N/A	(2) 14AWG	1	3/4"	1	OFCI
20	DI	VFD-2 IN MANUAL CONTROL	VFD DIGITAL OUTPUT	N/A	(2) 14AWG	1	3/4"		OFCI
21	DI	VFD-3 IN AUTOMATIC CONTROL	VFD DIGITAL OUTPUT	N/A	(2) 14AWG	1	3/4"	1	OFCI
22	DI	VFD-3 IN MANUAL CONTROL	VFD DIGITAL OUTPUT	N/A	(2) 14AWG	1	3/4"		OFCI
23	DI	GENERATOR RUNNING	AUX CONTACT IN ATS	N/A	(2) 14AWG	1	3/4"	1	OFCI
24	DI	STATION POWER	AUX CONTACT IN MAIN SWBD	N/A	(2) 14AWG	1	3/4"		OFCI
25	DI	DOOR ENTRY INTRUSION	GE SENTROL 2500 SERIES	DOOR	(2) 14AWG	4	3/4"	2	CFCI
26	DI	ARMED	AUX CONTACT IN SECURITY PANEL	N/A	(2) 14AWG	1	3/4"	1	OFCI
27	DO	PU-1 START COMMAND	VFD DIGITAL INPUT	N/A	(2) 14AWG	1	3/4"	1	OFCI
28	DO	PU-1 STOP COMMAND	VFD DIGITAL INPUT	N/A	(2) 14AWG	1	3/4"	1	OFCI
29	DO	PU-2 START COMMAND	VFD DIGITAL INPUT	N/A	(2) 14AWG	1	3/4"	1	OFCI
30	DO	PU-2 STOP COMMAND	VFD DIGITAL INPUT	N/A	(2) 14AWG	1	3/4"	1	OFCI
31	DO	PU-3 START COMMAND	VFD DIGITAL INPUT	N/A	(2) 14AWG	1	3/4"	1	OFCI
32	DO	PU-3 STOP COMMAND	VFD DIGITAL INPUT	N/A	(2) 14AWG	1	3/4"	1	OFCI

NOTES

1. PROVIDE ENCLOSURE FOR PLC AND ASSOCIATED EQUIPMENT(PLC1). ENCLOSURE SHALL BE 30" X 40" NEMA 3R WITH A HINGED COVER. ENCLOSURE SHALL BE EQUIPPED WITH BACK PLATE MOUNTING STUDS FOR BACK PLATE. DELIVER BACK PLATE TO THE OWNER REPRESENTATIVE FOR OWNER REPRESENTATIVE TO MOUNT OWNER FURNISHED EQUIPMENT. OWNER REPRESENTATIVE WILL COORDINATE RETURN OF THE BACK PLATE. PROVIDE ALL TERMINATIONS OF CONDUCTORS AT ALL FIELD DEVICES AND AT THE OWNER FURNISHED TERMINAL BLOCKS LOCATED IN THE AFOREMENTIONED ENCLOSURE.
2. FIXTURE IS NOT TO BE CONTROLLED VIA LOCAL SWITCH OR ANY OTHER DEVICE.
3. PROVIDE COMMUNICATION CABLE PER MANUFACTURER'S SPECIFICATIONS BETWEEN MAIN CABINET IN SWITCHBOARD TO PLC CABINET FOR METERING.

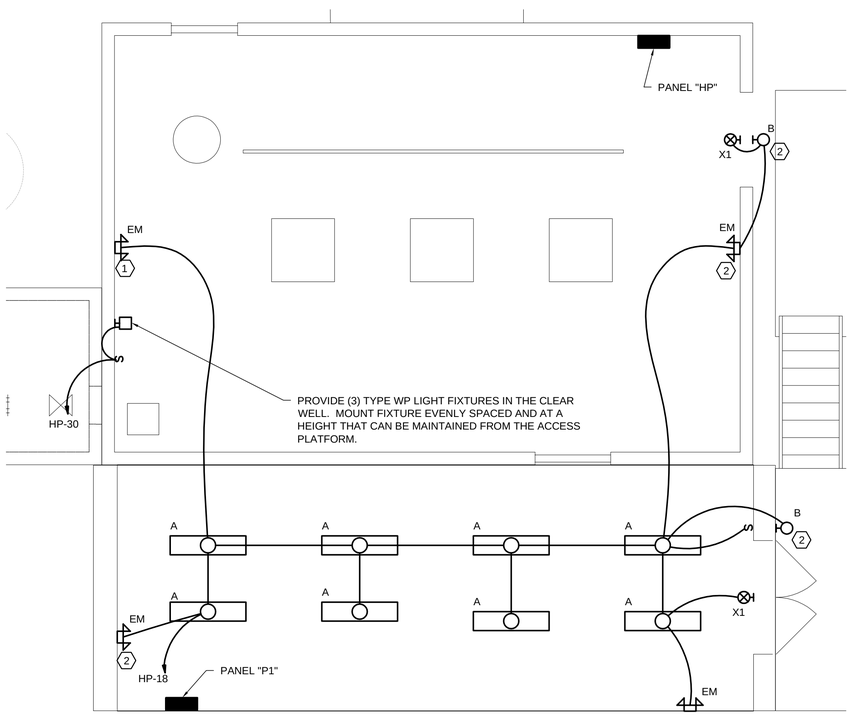

FLOOR PLAN – LIGHTING

SCALE: 1/4" = 1'-0"

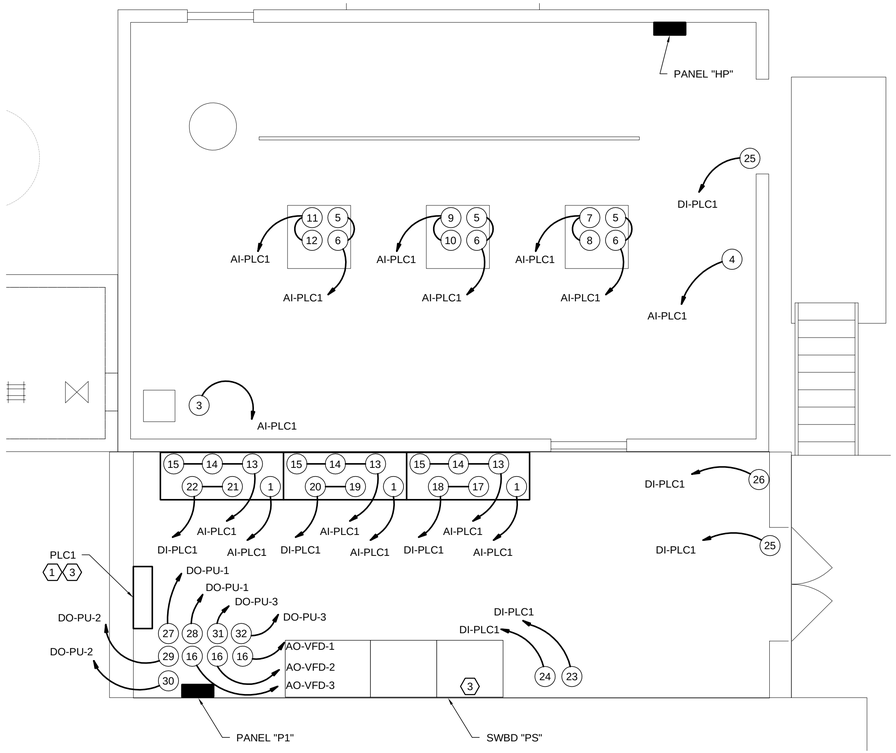

FLOOR PLAN – INSTRUMENTATION

SCALE: 1/4" = 1'-0"

IF THIS DRAWING IS A REDUCTION, GRAPHIC SCALE MUST BE USED.

5' 0 5'

1/4" = 1'-0"

Wiley|Wilson® Constant Progress
127 Nationwide Drive, Lynchburg, Virginia 24502-4272
phone 434.947.1901 | fax 434.947.1921 | web wileywilson.com

PRE-FINAL REVIEW NOT FOR CONSTRUCTION

CITY OF HARRISONBURG
NORTH RIVER PUMP STATION UPGRADE
BRIDGEWATER, VIRGINIA

MRK	DATE	REVISION DESCRIPTION
0	12/13/2013	PRE-FINAL REVIEW

COMM NO: 213110
DATE: 12/13/2013
DRAWN: TFB DESIGN: TFB
CHECK: WPM
SHEET TITLE

FLOOR PLAN - LIGHTING & INSTRUMENTATION

SHT. NO. E-101
REV. NO. 0

X:\2013\213110 HBURG N RIVER PS 2013 UPGRADE\CAD\ELEC\213110_E101.DWG 12/13/2013 2:41 PM

NOTES:

1. REMOVE EXISTING 2400V SWITCHGEAR. REMOVE ALL EXISTING CONDUIT AND CONDUCTORS FROM SWITCHGEAR TO EXISTING PUMPS. COORDINATE WITH UTILITY FOR DISCONNECTION OF EXISTING 19.2/2400V TRANSFORMER PRIOR TO REMOVAL.
2. SEE SHEET E-001 FOR CONTINUATION TO EXISTING UTILITY POLE.
3. EXISTING HOUSE PANEL, RELOCATE EXISTING CIRCUITS TO NEW PANELS PER SCHEDULE ON E-602.
4. PROVIDE A NFD 60AMP, 600V, THAT IS NEMA3R RATED. COORDINATE LOCATION WITH EQUIPMENT PROVIDER.
5. PROVIDE A 20A GFCI IN A WEATHER PROOF ENCLOSURE. COORDINATE LOCATION OF RECEPTACLE WITH EQUIPMENT INSTALLER.
6. PANEL 'HP' IS TO BE LOCATED WHERE THE EXISTING MAIN SWITCHBOARD IS CURRENTLY LOCATED. COORDINATE REMOVAL OF ONE OF THE UNUSED SECTIONS PRIOR TO INSTALLATION OF PANEL 'HP'. COORDINATE ALL OUTAGES WITH THE OWNERS REPRESENTATIVE 48HRS PRIOR TO ANY OUTAGE.
7. PROVIDE 500 GALLON SUBBASE FUEL TANK AND MOUNT EXISTING GENERATOR ON TOP OF TANK.
8. PROVIDE A CONNECTED GROUNDING SYSTEM CONSISTING OF THREE 3/4" COPPER CLAD GROUND RODS ARRANGED PER THE DRAWINGS. COORDINATE LOCATION OF THE GROUND RODS WITH EXISTING AND NEW UTILITIES.
9. PROVIDE A 2" CONDUIT FOR CONNECTION OF THE GROUND TO THE NEW SWITCHGEAR.
10. PROVIDE A 4/0 BARE COPPER CONDUCTOR EXOTHERMALLY CONNECTED TO THE GROUND RODS AND COMPRESSION BOLTED CONNECTION TO THE NEW SWITCHGEAR.
11. PROVIDE COMBINATION STARTER IN NEMA 3R ENCLOSURE.
12. COORDINATE CONDUIT TURN UP WITH UTILITY TRANSFORMER.
13. COORDINATE LOCATION OF METER BASE WITH UTILITY COMPANY.

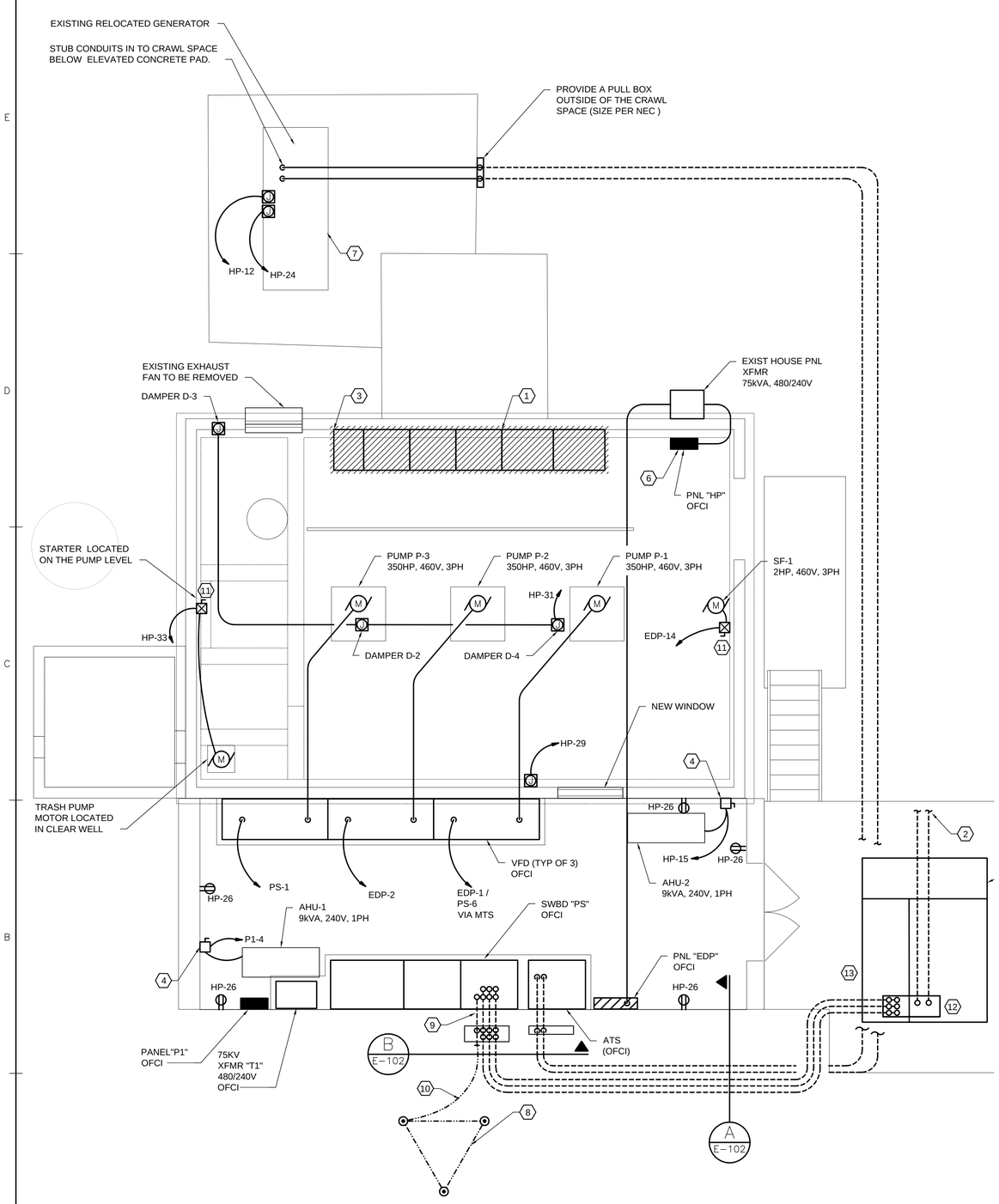

FLOOR PLAN – POWER
SCALE: 1/4" = 1'-0"

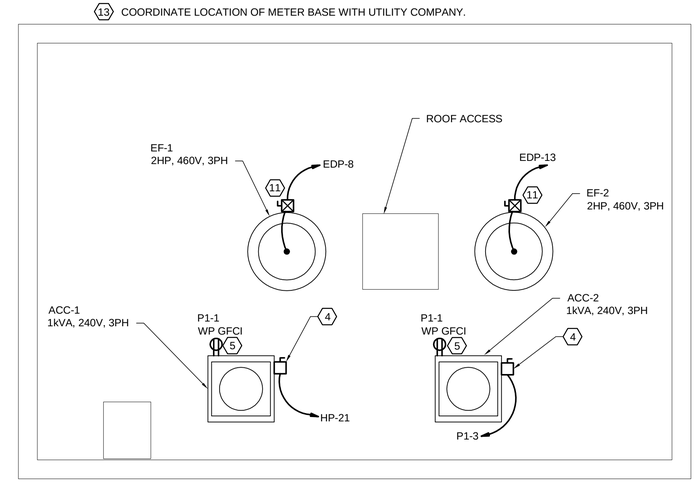

ROOF PLAN – POWER
SCALE: 1/4" = 1'-0"

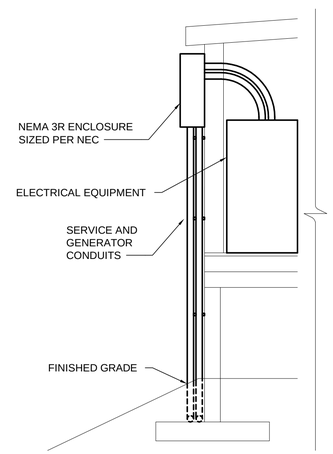

PULL BOX LOCATION (A E-101)
SCALE: 1/4" = 1'-0"

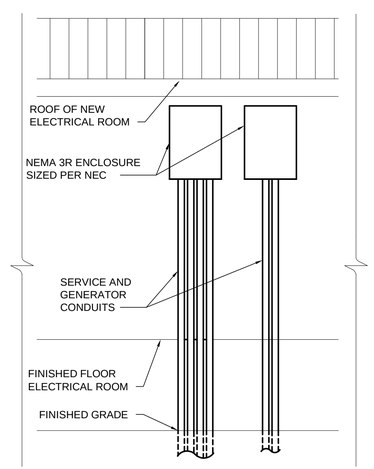

PULL BOX LOCATION (B E-101)
SCALE: 1/4" = 1'-0"

IF THIS DRAWING IS A REDUCTION, GRAPHIC SCALE MUST BE USED.
5' 0 5'
1/4" = 1'-0"

Wiley|Wilson® Constant Progress
127 Nationwide Drive, Lynchburg, Virginia 24502-4272
phone 434.947.1901 | fax 434.947.1901 | web wileywilson.com

PRE-FINAL REVIEW NOT FOR CONSTRUCTION

CITY OF HARRISONBURG
NORTH RIVER PUMP STATION UPGRADE
BRIDGEWATER, VIRGINIA

MRK	DATE	REVISION DESCRIPTION
0	12/13/2013	PRE-FINAL REVIEW

COMM NO:	213110
DATE:	12/13/2013
DRAWN:	TFB
DESIGN:	TFB
CHECK:	WPM
SHEET TITLE	FLOOR PLAN - POWER
SHT. NO.	E-102
REV. NO.	0

X:\2013\213110 HBURG N RIVER PS 2013 UPGRADE\CAD\ELEC\213110_E102.DWG 12/13/2013 2:47 PM

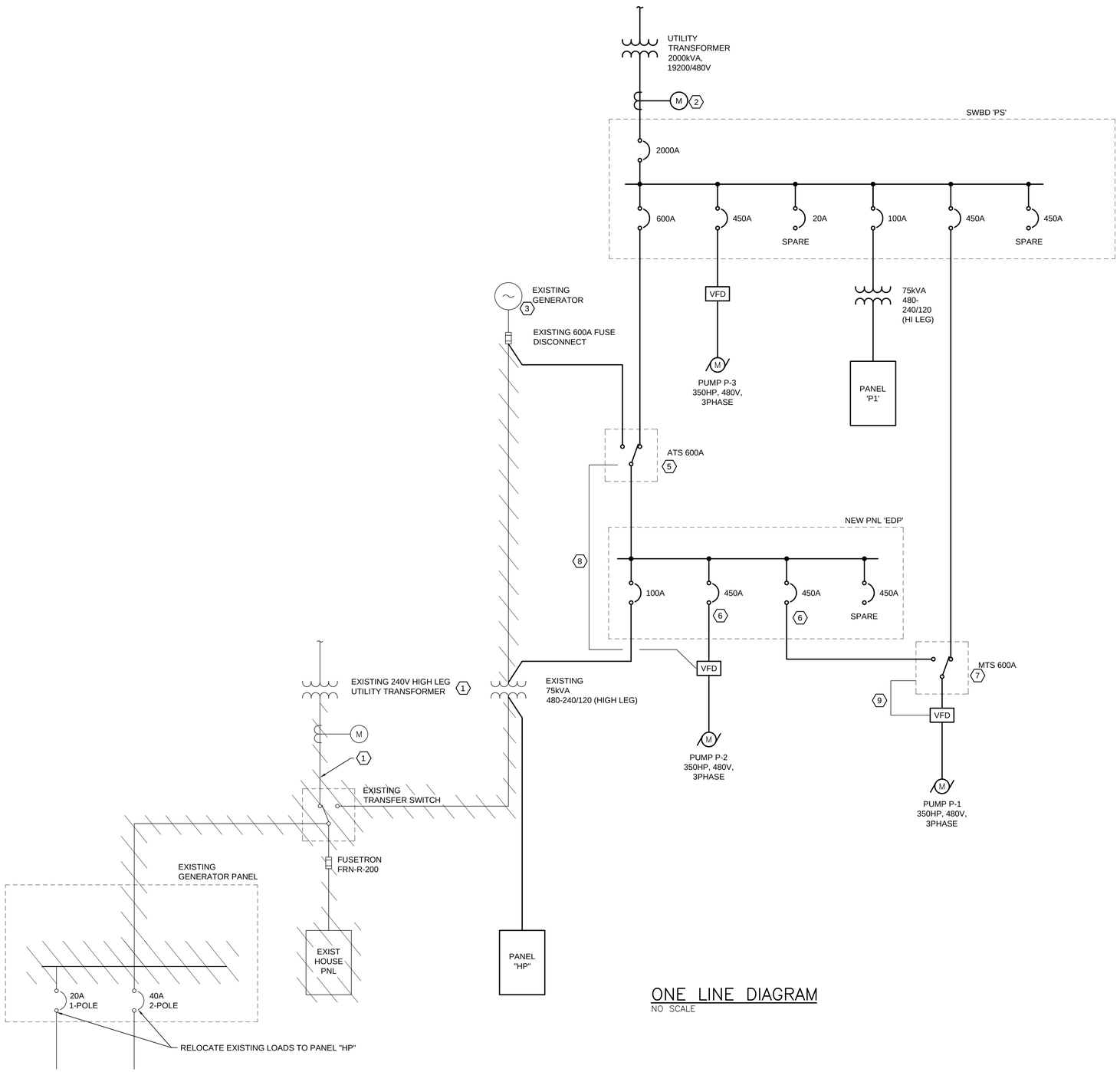

ONE LINE DIAGRAM

NO SCALE

NOTES:

1. COORDINATE WITH THE LOCAL UTILITY COMPANY TO REMOVE EXISTING POLE MOUNTED TRANSFORMER AND SECONDARY CONDUCTORS TO EXISTING METER BASE.
2. INSTALL UTILITY SUPPLIED CTs IN THE NEW UTILITY TRANSFORMER. PROVIDE CONDUIT FROM CTs TO METER CABINET. CONDUIT SIZE, METER CABINET LOCATION, AND COMPLETE INSTALLATION TO MEET THE UTILITY'S SPECIFICATIONS.
3. EXISTING GENERATOR TO BE MODIFIED AND RELOCATED, SEE SITE DRAWINGS FOR EXACT LOCATION. PROVIDE A DETAILED SERVICE REPORT FROM THE GENERATOR MANUFACTURE APPROVED REPRESENTATIVE PRIOR TO RELOCATION OF GENERATOR. SERVICE REPORT TO INCLUDE LOAD TEST AND OIL ANALYSIS. OWNER REPRESENTATIVE IS TO RECEIVE AND REVIEW REPORT14 DAYS PRIOR TO GENERATOR MODIFICATIONS AND RELOCATION. PROVIDE A SECOND DETAILED SERVICE REPORT FROM THE GENERATOR MANUFACTURE APPROVED REPRESENTATIVE AFTER MODIFICATION AND RELOCATION IS COMPLETE. ANY VARIANCES IN THE REPORT MUST BE REVIEWED WITH THE OWNER REPRESENTATIVE. ANY CORRECTIONS TO VARIANCES THAT OCCUR AS FAULT OF THE MODIFICATION AND RELOCATION WILL NOT BE THE RESPONSIBILITY OF THE OWNER OR THE OWNER REPRESENTATIVE.
4. PROVIDE A COMBINATION STARTER. SIZE OVERLOAD PROTECTION AND FUSE SIZE PER MOTOR MANUFACTURE'S RECOMMENDATIONS.
5. PROVIDE WITH ATS MULTIPLE AUX CONTACTS FOR PLC INPUTS AND ALSO FOR INPUTS TO THE VFD FOR PUMP P-2. CONTACTS ARE TO VERIFY POSITION OF ATS AND VERIFICATION OF GENERATOR VOLTAGE.
6. PROVIDE A KIRK KEY INTERLOCK ON THE TWO BREAKERS LOCATED IN PANEL "EDP" SERVING PUMP P-1 AND PUMP P-2. THE ORDER OF OPERATION SHOULD OPERATE IN SUCH THAT ONLY ONE OF THE BREAKERS THAT IS INTERLOCKED IS ALLOWED TO CLOSE WHILE THE OPPOSING IS LOCKED IN THE OPEN POSITION PREVENTING BOTH BREAKERS FROM BEING CLOSED AT THE SAME TIME.
7. PROVIDE MTS WITH AN AUX CONTACT FOR INPUT TO VFD. VFD TO REQUIRE A DIGITAL INPUT FROM MTS FOR OPERATION OF MOTOR WHILE ON GENERATOR POWER.
8. PROVIDE 2 #14 AWG THHN FROM THE AUX CONTACT LOCATED IN THE ATS TO THE VFD FOR A DIGITAL INPUT OF ATS POSITION. COORDINATE TERMINAL LOCATION WITH VFD MANUFACTURE PROVIDED DRAWINGS.
9. PROVIDE 2 #14 AWG THHN FROM THE AUX CONTACT LOCATED IN THE MTS TO THE VFD FOR A DIGITAL INPUT OF MTS POSITION. COORDINATE TERMINAL LOCATION WITH VFD MANUFACTURE PROVIDED DRAWINGS.

Wiley|Wilson® Constant Progress
127 Nationwide Drive, Lynchburg, Virginia 24502-4272
phone 434.947.1901 | fax 434.947.1921 | web wileywilson.com

PRE-FINAL REVIEW NOT FOR CONSTRUCTION

CITY OF HARRISONBURG
NORTH RIVER PUMP STATION UPGRADE
BRIDGEWATER, VIRGINIA

MRK	DATE	REVISION DESCRIPTION
0	12/13/2013	PRE-FINAL REVIEW

COMM NO: 213110
DATE: 12/13/2013
DRAWN: TFB DESIGN: TFB
CHECK: WPM
SHEET TITLE
ONE LINE DIAGRAM
SHT. NO. E-601
REV. NO. 0

X:\2013\213110 HBURG N RIVER PS 2013 UPGRADE\CAD\ELEC\213110_E601.DWG 12/13/2013 2:49 PM

SWITCHBOARD PS SCHEDULE

SWBD RATING: 480 VOLTS, 3 PHASE, 4 WIRE
MINIMUM BUS BRACING & OVERCURRENT DEVICE INTERRUPTING RATING: 65,000 SYM RMS AMPS
BUS RATING:

SPACE CKT NO.	LOAD DESCRIPTION	CONNECTED KVA A	CONNECTED KVA B	CONNECTED KVA C	POLES	OVERCURRENT DEVICE RATING FRAME	OVERCURRENT DEVICE RATING TRIP	OVERCURRENT DEVICE SETTING PHASE LONG TIME	PHASE SHORT TIME	PHASE INSTANT	GROUND FAULT PICKUP	GROUND FAULT TIME	FEEDER CIRCUIT PHASE	NEUTRAL	EGC	CONDUIT
0	MAIN BREAKER	460.8	455.1	458.8	3	2000	2000	-	-	-	-	-	-	-	-	-
1	PUMP P-3	110.0	110.0	110.0	3	600	600	-	-	-	-	-	(2) 350	-	2/0	(2) 4"
2	SPARE	-	-	-	3	100	20	-	-	-	-	-	-	-	-	-
3	PNL EDP VIA ATS	240.8	235.1	238.8	3	1000	1000	-	-	-	-	-	(4) 250	(4) 250	1/0	(4) 3"
4	SPARE	-	-	-	3	600	600	-	-	-	-	-	-	-	-	-
5	SPARE	-	-	-	3	600	450	-	-	-	-	-	-	-	-	-
6	PUMP P1 MTS	110.0	110.0	110.0	3	600	600	-	-	-	-	-	(2) 350	-	2/0	(2) 4"

TOTAL PHASE AMPS: A: 1663.5 B: 1643.0 C: 1656.3
TOTAL CONNECTED LOAD: 1374.7 KVA 1655.5 A

PANEL P1 SCHEDULE

175A MCB, 240/120, 3 PHASE, 4W, SN, GROUND BUS — MOUNT: SURFACE — LOCATION: — 65.0 KAIC

LOAD DESCRIPTION	LOAD (KVA) A	B	C	BKR TRIP	WIRE SIZE	COND SIZE	CKT NO.	PHASE A B C	CKT NO.	COND SIZE	WIRE SIZE	BKR TRIP	LOAD (KVA) A	B	C	LOAD DESCRIPTION
RECEPTS	0.9			20	12	1/2"	1	A	2	1/2"	12	20	0.5			LTS
ACC-2		1.0		20	12	3/4"	3	B	4	3/4"	10	30		12.5		AHU-1
			1.0					C							12.5	
	1.0							A					12.5			
		1.0		-	-	-	9	B	10	-	-	-		2.2		
SPARE			1.0					C							2.2	SPARE
	1.0							A					2.2			
SPARE				20			15	B	16			20				SPARE
SPARE				20			17	C	18			20				SPARE
SPARE				20			19	A	20			20				SPARE
SPARE				20			21	B	22			20				SPARE
SPARE				20			23	C	24			20				SPARE
SPARE				20			25	A	26			20				SPARE
SPARE				20			27	B	28			20				SPARE
SPARE				20			29	C	30			20				SPARE
TOTAL	2.9	2.0	2.0										15.2	14.7	14.7	TOTAL

CONN. LOAD: 51.5 KVA 124.0 A — TOTAL PHASE KVA: A: 18.1 B: 16.7 C: 16.7
DEMAND LOAD: 51.5 KVA 124.0 A — TOTAL PHASE AMPS: A: 150.8 B: 139.2 C: 139.2

PANEL EDP SCHEDULE

1200A MLO, 480Y/277V, 3 PHASE, 4W, SN, GROUND BUS — MOUNT: SURFACE — LOCATION: — 0.0 KAIC

LOAD SERVED	LOAD (KVA) A	B	C	BKR TRIP	WIRE SIZE	COND SIZE	CKT NO.	PHASE A B C	CKT NO.	COND SIZE	WIRE SIZE	BKR TRIP	LOAD (KVA) A	B	C	LOAD SERVED
PUMP P-1 MTS	110.0			600	(2)350	3"	1	A	2	3"	(2)350	600	110.0			PUMP P-2
		110.0						B						110.0		
			110.0					C							110.0	
EXIST HOUSE PNL	15.1			100	2	1 1/4"	7	A	8	1/2"	12	20	1.9			EF-1
		9.4						B						1.9		
			13.1					C							1.9	
EF-2	1.9			20	12	1/2"	13	B	14	1/2"	12	20	1.9			SF-1
		1.9						C						1.9		
			1.9					A							1.9	
							19	A	20							
							21	B	22							
							23	C	24							
TOTAL	127.0	121.3	125.0										113.8	113.8	113.8	TOTAL

CONN. LOAD: 714.7 KVA 860.7 A — TOTAL PHASE KVA: A: 240.8 B: 235.1 C: 238.8
DEMAND LOAD: 797.2 KVA 960.0 A — TOTAL PHASE AMPS: A: 869.3 B: 848.7 862.1

PANEL HP SCHEDULE

175A MCB, 240/120, 3 PHASE, 4W, SN, GROUND BUS — MOUNT: SURFACE — LOCATION: — 65.0 KAIC

	LOAD DESCRIPTION	LOAD (KVA) A	B	C	BKR TRIP	WIRE SIZE	COND SIZE	CKT NO.	PHASE A B C	CKT NO.	COND SIZE	WIRE SIZE	BKR TRIP	LOAD (KVA) A	B	C	LOAD DESCRIPTION	
1	LIGHTS	1.4			20	12	1/2"	1	A	2	1/2"	12	20	1.4			BRISTOL CONTROL	1
	BLANK		0.0		-	-	-	3	B	4	-	-	-		0.0		BLANK	
1	RECEPTS			1.4	-			5	C	6	1/2"	12	20			1.4	TRAVELING SCREEN	
1	LOW WATER CUTOFF	1.4			20	12	1/2"	7	A					1.4				1
	BLANK		0.0		20	12	1/2"	9	B						1.4			
1	SCEEN CONTROLS			1.4	-			11	C	12	1"	8	40			0.0	GENERATOR HEATER	
1	LOUVER	1.0			20	12	1/2"	13	A					0.0				
	AHU INDOOR UNIT		3.2		30	10	3/4"	15	B	16	-	-	-		0.0		BLANK	
	AHU-2			3.2					C	18	1/2"	12	20			1.4	LIGHTS VFD ROOM	
		3.2							A	20	1/2"	12	20	0.5			BRISTOL CONTROL	1
	AHU OUTDOOR UNIT		2.4		20	12	3/4"	21	B	22	-	-	-		0.0		BLANK	
	ACC-1			2.4					C	24	3/4"	12	20			0.0	RECEPTS GENERATOR	
		2.4							A	26	1/2"	12	20	0.9			RECEPTS VFD ROOM	
	BLANK		0.0		-	-	-	27	B	28	-	-	-		0.0		BLANK	
	DAMPER D-1			0.5	20	12	1/2"	29	C	30	1/2"	12	20			1.4	LIGHTS IN CLEAR WELL	
	DAMPERS D-2 THRU D-4	1.5			20	12	1/2"	31	A	32	-	-	20				SPARE	
	TRASH PUMP		2.4		20	12	1/2"	33	B	34	-	-	-		0.0		BLANK	
	SPARE				20	-	-	35	C	36	-	-	20				SPARE	
	SPARE				20	-	-	37	A	38	-	-	20				SPARE	
	BLANK		0.0		-	-	-	39	B	40	-	-	-		0.0		BLANK	
	SPARE				20	-	-	41	C	42	-	-	20				SPARE	
	TOTAL	10.9	8.0	8.9										4.2	1.4	4.2	TOTAL	

CONN. LOAD: 37.6 KVA 90.6 A — TOTAL PHASE KVA: A: 15.1 B: 9.4 C: 13.1
DEMAND LOAD: 25.9 KVA 62.4 A — TOTAL PHASE AMPS: A: 125.8 B: 78.3 C: 109.2

LIGHTING FIXTURE SCHEDULE

SYMBOL	MANUFACTURER	CATALOG NUMBER	LAMPS NO.	LAMPS TYPE	VOLTAGE	MOUNTING	NOTES
A	LITHONIA	L 2 32 MVOLT GEB10IS	2	32W T8	120	PENDANT	
B	LITHONIA	TWH 70M 120 QRS PE VG DBL LPI	1	INCLUDED W/ FIXTURE	120	WALL	
EM	LITHONIA	ELM SD	2	LED	120	WALL	
X1	LITHONIA	LE S W 1 R 120 ELN	1	LED	12O	WALL	
WP	HUBBELL	PGM2-H178	1	METAL HALIDE	12O	WALL	INSTALL ON WALL IN CLEAR WELL

NOTES:

1. RELOCATED CIRCUIT FROM EXISTING HOUSE PANEL.

Wiley|Wilson® Constant Progress
127 Nationwide Drive, Lynchburg, Virginia 24502-4272
phone 434.947.1901 | fax 434.947.1921 | web wileywilson.com

PRE-FINAL REVIEW NOT FOR CONSTRUCTION

CITY OF HARRISONBURG
NORTH RIVER PUMP STATION UPGRADE
BRIDGEWATER, VIRGINIA

MRK	DATE	REVISION DESCRIPTION
0	12/13/2013	PRE-FINAL REVIEW

COMM NO: 213110
DATE: 12/13/2013
DRAWN: TFB DESIGN: TFB
CHECK: WPM
SHEET TITLE: SCHEDULE
SHT. NO. E-602 REV. NO. 0

X:\2013\213110 HBURG N RIVER PS 2013 UPGRADE\CAD\ELEC\213110_E602.DWG 12/13/2013 2:49 PM