GENERAL NOTES

1. Work in this project shall conform to the latest editions of the Virginia Department of Transportations (VDOT) Road and Bridge Specifications, the VDOT Road and Bridge Standards, the Virginia Erosion and Sediment Control Handbook, the Virginia Erosion and Sediment Control Regulations and the City of Harrisonburg Design and Construction Standards Manual. In the event of conflict between any of these standards, specifications or plans, the most stringent shall govern. All utilities to be dedicated to the City of Harrisonburg Municipal Water and/or Sanitary Sewer System shall be constructed and tested to conform to Commonwealth of Virginia/Department of Health Waterworks Regulations and/or Department of Environmental Quality Sewerage Collection and Treatment Regulations and the City of Harrisonburg Design and Construction Standards Manual.

2. All drain inlets shall be protected from siltation. Ineffective protection devices shall be immediately replaced and the inlet cleaned. Flushing is not an acceptable method of cleaning.

3. When the crushed stone construction entrance has been covered with soil or has been pushed into the soil by construction traffic, it shall be replaced with a depth of stone equal to that of original application.

4. The location of existing utilities as shown is approximate only. The contractor is responsible for locating all public or private utilities that lie in or adjacent to the construction site. The contractor shall be responsible for repairing, at his expense, all existing utilities damaged during construction. Forty-eight (48) hours prior to any excavation call Miss Utility 1(800) 552-7001.

5. All underground facilities located within the City's rights-of-way shall be installed prior to the placement of any part of the pavement structure.

6. Installation of concrete storm pipe shall comply with VDOT Standard Drawing PB-1.

7. All materials used for fill or backfill shall be free of wood, roots, rocks, boulders or any other non-compactable soil type material. Unsatisfactory materials also include man-made fills and refuse debris derived from any source. Satisfactory material for use as fill for public streets include material classified in ASTM D-2487 as GW, GP, GM, GC, SW, SP, SM, SC, ML, and CL groups. The moisture content shall be controlled within plus or minus 2 percentage points of optimum to facilitate compaction. Generally, unsatisfactory materials include materials classified in ASTM D-2487 as PT, CH, MH, OL, OH, and any soil too wet to facilitate compaction. CH and MH soils may be used subject to approval of the Engineer. Soils shall have a minimum dry density of 9210/cubic foot per ASTM D-698 and shall have a plasticity index less than 12.

8. Materials used to construct embankments for any purpose, backfill around drainage structures or in utility trenches, or any other depression requiring fill or backfill shall be compacted to 95% of maximum density as determined by the standard Proctor test as set out in ASTM standard D-698. The contractor shall, prior to any operations involving filling or backfilling, submit the result of the Proctor test together with a certification that the soil tested is representative of the materials to be used on the project. Tests shall be conducted by a certified materials testing laboratory and the certifications made by a licensed professional Engineer representing the laboratory.

9. Embankment fill and trench backfill shall be placed in lifts at a maximum uncompacted depth of 8-inches and 6-inches, respectively. Density tests shall be conducted at the following minimum frequencies:
(a) Embankment for roads, streets, dams, etc.: One test per lift per 10,000 square feet of lift. (b) Backfill around structures and in trenches: One test per lift per 500 lineal feet of trench.
Compaction tests for street pavement structure shall be made in cut and fill areas at the following minimum frequencies: (a) Sub-Grade: One test per lane per 500 lineal feet. (b) Stone Base: One test per lane per 6" compacted lift per 500 lineal feet. (c) Hot Asphaltic Concrete: One test per lane per lift per 500 lineal feet.

10. All excavations, including trenches, shall be kept dry to protect their integrity.

11. Test results shall be submitted to the Engineer. Failure to conduct density tests shall be cause for non-acceptance of the facility. Tests shall be conducted at the sole cost of the Contractor.

12. Standard UD-4 underdrain shall be installed where indicated on plans or further where determined necessary in the field by the City Inspectors.

13. Pavement design in based upon City minimum pavement sections as outlined in the DCSM.

14. City Inspectors have full authority to reject fill or backfill materials, require undercutting or sub grade stabilization, require provisions for sub drainage, or require other measures which affect the integrity of road and utility construction. Failure to comply with Inspectors' directives shall be cause for nonacceptance of the facility.

15. Traffic control on public streets shall be in conformance with the Manual of Uniform Traffic Control Devices and as further directed by City Inspectors.

16. Any discrepancies found between the drawings and specifications and site conditions or any inconsistencies or ambiguities in drawings or specifications shall be immediately reported to the Engineer, in writing, who shall promptly address such inconsistencies or ambiguities. Work done by the contractor after his discovery of such discrepancies, inconsistencies or ambiguities shall be done at the contractor's risk.

17. A preconstruction conference shall be held prior to the start of construction. The contractor shall arrange the meeting with the Public Works Department and/or Engineer.

18. Install City standard street centerline monuments where required for new streets. Monumemnts will be provided by City; contract unit price shall included installation of monument and any materials associated with installation. Contractor shall coordinate with City surveyor and City Inspection on placement of monuments.

19. Topsoil and seed all disturbed areas not otherwise covered.

20. Temporary construction easements shown are being provided by private property owners in total cooperation with the City. Such easements are for access and temporary occupation only as necessary to complete the work. Unless an owner specifically agrees, contactor shall not use these areas for long term storage of materials, equipment or vehicles (including employee vehicles) and shall endeavor to limit impact on these areas to a minimum. Contractor shall cooperate with property owners to address their concerns over use of, or access to, their property. All damage to public and private properties caused by the contactor's operations or negligence, beyond that defined by the work itself, shall be repaired to the City's satisfaction at no additional cost to the owner.

21. Miscellaneous items of work shown on the drawings for which there is no specified unit price are considered to be incidental and the costs for such items shall be included in the price bid for other items.

22. Provide radding and concrete thrust blocking of waterline appurtenances in accordance with City standards. Provide waterline taps as necessary for pressure testing and bacteriological sampling. All waterline testing and documentation is the contractor's responsibility. City Inspector shall collect samples.

23. Grass channels, whether detailed or a result of slope ties, shall be overseeded, protected, maintained and reseeded as necessary to establish erosion-resistant grass cover.

24. Pipe lengths shown are from center-to-center of structures.

25. New water pipe shall be ductile iron class 52.

26. "To be removed" (TBR) and "remove" indicates contractor's work unless noted to be by others.

27. Driveway replacements shall match existing driveways, whether gravel, concrete or paved. Minimum thickness for gravel drives shall be 6 inches of compacted 21A Stone. Minimum paved driveway section shall be 6 inches compacted 21A stone with 2 inches SM-9.5AL asphaltic concrete.

28. Limits and grades of all driveway replacements shall be confirmed in field with the City Engineer.

29. Precast units adjacent to cast-in-place concrete items, such as sidewalks, ditches, gutters and flumes, shall be connected to the adjacent unit by means of No.4 smooth steel dowels spaced on approximately 12 - inch centers throughout the contact length and extend at least into both the precast unit and the cast-in place item. Refer to VDOT 2007 Road and Bridge Spec's, sect. 302.03, page 293, paragraph (B) IE

30. Contractor to coordinate with HEC (Todd McCray @ 434-536) prior to installing concrete sidewalk so HEC can install 1" conduit in sidewalk for future street lighting.

31. Existing drainage facilities being utilized as part of the drainage system shall be cleaned as directed by the Engineer. The cost incidental to this shall be included in the contract price for other items.

32. The material listed below will be paid for on a tonnage basis on this project. The theoretical tonnage shown on these plans is based on the weight shown hereon. The weight will vary in accordance with the specific gravity of the aggregates and the asphaltic content of the mix actually used to secure the design depth. The weight of the asphalt concrete is based on 95% of theoretical maximum density.

33. The City purchased several properties during the right-of-way phase of this project that may be used as construction staging areas. These parcels are labeled on the respective plan sheets. Contractor shall keep staging areas appropriately organized and secure.

34. Two geotechnical reports were developed for this project, and are available to the contractor to use for information only. A summary of the reports are as follows:
a. S&ME Report, July 2012. Includes general project information and boring log data.
b. F&R Report, December 2013. Includes more detailed information for retaining walls (specifically Retaining Wall "E") and general subgrade work.
c. F&R Addendum #1, January 2014. Includes detailed information about pavement design based on updated traffic volumes.

GRADING

G-1 The grade line denotes top of finished pavement unless shown otherwise on typical sections or plans.

G-3 Earthwork quantities on this project are based on anticipated settlement and may require adjusting during construction. Payment will be made only for quantities actually moved.

G-4 The cost of removal of all existing concrete items located in the area to be graded, including, but not limited to the following, shall be included in the price bid for regular excavation: Curb and Gutter, Concrete Pipe, Sidewalk, Foundations

G-6 If any off-site borrow materials are used as structural fill, these materials should be of low plasticity (plasticity index less than 25), free of organics and debris, and have a maximum particle size of 3 inches. In addition, the off-site borrow should have a standard Proctor maximum dry density (VTM-1) of at least 100 pounds per cubic foot.

PAVEMENT

P-2 The pavement materials on this project will be paid for on a tonnage basis. The weight will vary in accordance with the specific gravity of the aggregates and the asphaltic content of the mix actually used to secure the design depth. The weight of the asphalt concrete is based on 95% of the theoretical maximum density.

INCIDENTALS

I-7 Where Standard slope roundoffs would damage trees, bushes or other desirable vegetation, they shall be omitted when so ordered by the Engineer.

I-9 When no centerline alignment is shown for a proposed entrance, the entrance shall be constructed in the same location as the existing entrance.

I-18 All pavement markings and traffic flow arrows shown on the roadway construction plans are schematic only. The actual location and application of pavement markings shall be in accordance with Section 704 of the applicable VDOT Road and Bridge Specifications, MUTCD, sequence of construction/traffic control plans, pavement marking plan sheets 12(3) thru 12(11C) and as directed by the Engineer.

I-20 The Official Electronic PDF Version of the plans will override the paper copies or prints of specific layers.

Portions of this plan assembly have been CADD generated. To assist in the preparation of the bid and construction of the project, Microstation format (.dgn) files will be made available to the prime contractor during bids and after award of the contract.

I-21 All electronic plan assemblies will include the construction plans in two formats: PDF files and MicroStation format (.dgn) files. Only the PDF files will be considered as part of the official plan assembly.

The MicroStation format (.dgn) files are furnished only as information for the contractor. These plans are developed in layers (levels) to aid in readability. However, the construction items may or may not be in the proper layering scheme as described in the VDOT CADD Manual. The MicroStation files will only match the scanned files if all required levels are turned on. A Microstation Software license is required to be able to read these files.

DRAINAGE

D-1 The horizontal location of all drainage structures shown on these plans is approximate only, with the exception of structures showing specific stations, special design bridges and storm sewer systems.

D-2 The horizontal location and invert elevations shown for proposed culverts and storm sewer outfall pipes are based on existing survey data and required design criteria. If during construction, it is found that the horizontal location or invert elevations shown on the plans differ significantly from the horizontal location or elevations of the stream or swale in which the culvert or storm sewer outfall pipe is to be placed, the Engineer shall confer with, and get approval from, the applicable District Drainage Engineer before installing the culvert or storm sewer outfall pipe.

D-3 The "H" dimensions shown on plans for drop inlets and junction boxes and the "L.F." dimensions shown for manholes are for estimating purposes and are based on the proposed invert elevations shown for the structure and the anticipated top (rim) elevation based on existing or proposed finished grade. The actual "H" or "L.F." dimensions are to be determined by the contractor from field conditions.

D-6 Pipes shall conform to any of the allowable types shown on sheet number 2, within the applicable height of cover limitations.
For strength, sheet thickness, or class designation; available sizes; height of cover limitations; and other restrictions for a particular pipe type or height of cover, see the VDOT Road and Bridge Standard PC-1. Structural plate pipe may be substituted for corrugated pipe of the same size, provided the substitution complies with the applicable sections of the VDOT Road and Bridge Standards PC-1.

D-8 Where open joint pipe is to be used, no joint shall be opened a distance exceeding 25% of the spigot length. Sealing of the pipe joint shall be in accordance with Section 302 of the applicable VDOT Road and Bridge Specifications.

D-12 All existing drainage facilities labeled "To Be Abandoned" shall be left in place, backfilled and plugged in accordance with the VDOT Road and Bridge Standard PP-1. Basis of Payment will be C.Y. of Flowable Backfill.

D-13 Existing drainage facilities being utilized as a part of the drainage system, and designated on the plans "To Be Cleaned Out" shall be cleaned as directed by the Engineer. The cost incidental to this shall be included in the contract price for other items.

D-16 When CG-6 is specified on a radius (such as at a street intersection), the Engineer may approve a decrease in the cross slope of the gutter to facilitate proper drainage.

EROSION AND SEDIMENT CONTROL (ESC)

E-1 If the removal of Brush Silt Barrier is specified by the plans or required by the Engineer, the cost of removal and disposal of brush shall be in accordance with Section 109 of the applicable VDOT Road and Bridge Specifications.

E-2 Rock for Check Dams, Inlet Protection, Erosion Control Stone and Riprap shall be in accordance with Section 203 and Section 414 of the applicable VDOT Road and Bridge Specifications.

E-3 The following symbols are used to depict Erosion Control items in the plan assembly:

- EC-2 — Denotes Protective Covering, St'd. EC-2
- EC-3A, EC-3B, EC-3C — Denotes Soil Stabilization Mat. St'd. EC-3 Type A, B or C
- TFB — Denotes Temporary Filter Barrier, St'd EC-5
- TSF — Denotes Temporary Silt Fence, St'd EC-5
- TDC — Denotes Temporary Diversion Channel, St'd EC-12
- DD — Denotes Temporary Diversion Dike, St'd EC-9
- TC-I — Denotes Turbidity Curtain, Type - Impervious
- TC-P — Denotes Turbidity Curtain, Type - Pervious
- RCD-1 — Denotes Rock Check Dam, Type I: St'd EC-4
- RCD-2 — Denotes Rock Check Dam, Type II: St'd EC-4
- IP-A — Denotes Inlet Protection, Type A: St'd EC-6
- IP-B — Denotes Inlet Protection, Type B: St'd EC-6

Note: Contractor to monitor erosion control outfalls and address issues that may arise during construction, especially after storm events.

STORMWATER MANAGEMENT

S-1 CLEARING AND GRUBBING OF SWM BASIN SITE - The area where the dam is to be constructed and the area upstream of the dam, to an elevation equal to the crest of the dam (maximum ponded water elevation), shall be cleared and grubbed in accordance with Section 301 of the applicable VDOT Road and Bridge Specifications.

S-2 SWM BASIN DAM CONSTRUCTION - The dam for detention basins (no permanent pool) shall conform to the details contained in the plans and shall be constructed in accordance with Section 303 of the applicable VDOT Road and Bridge Specifications. The native material on which the dam will set shall meet the specifications for AASHTO Type A-4 or finer material. Where the native material does not meet this requirement, the area beneath the dam is to be excavated a minimum of 4' and backfilled with a material meeting the AASHTO Type A-4 or finer classification unless otherwise specified in the plans. The material used for the embankment of the dam shall be AASHTO Type A-4 or finer or otherwise specified in the plans. Dams with foundation and embankment material not meeting the above requirements or dams greater than 15' in height, or dams for retention basins (permanent pool) shall incorporate a membrane-lined trench, a homogenous embankment with seepage controls, a zoned embankment or other such approved designs as specified in the plans.

S-3 SWM BASIN OUTLET PIPE - The pipe culvert under or through the dam for detention basins (no permanent pool) shall be reinforced concrete pipe with rubber gaskets in accordance with Section 232 and 212 of the applicable VDOT Road and Bridge Specifications. A concrete cradle shall extend the full length of the pipe culvert in accordance with the Standard Drawings. The connection between the pipe culvert and the SWM-1 Drainage Structure (or other control structure) shall be made watertight as approved by the Engineer and the cost shall be included in the price bid for pipe.

S-4 The SWM-1 Drainage Structure (or other control structure) shall have 4" high numbers and 1" wide stripes painted at 1' intervals as shown on the Standard Drawings or detail sheets. The numbers and stripes are to be installed at the time of the initial installation of the SWM-1 Drainage Structure (or other control structure). Paint and application shall be in accordance with Section 231 and 411 of the applicable VDOT Road and Bridge Specifications and the cost is to be included in the price bid for the applicable structure.

S-5 All SWM Basins designated for use as temporary sediment basins shall be constructed during the initial phase of earth moving activities or as specified by the plans or directed by the Engineer. During project construction, the SWM-1 Drainage Structure (or other control structure) shall be modified in accordance with the Standard Drawings or plan details in order to provide a temporary sediment basin with both a "wet" storage volume (permanent pool) and a "dry" storage volume. Sediment accumulated in the basin shall be removed when the volume of the "wet" storage (permanent pool) has been reduced by 50%. Sediment shall be disposed of in accordance with Section 106.04 of the applicable VDOT Road and Bridge Specifications. When project construction is complete to a stage where no additional sediment from the project is expected to enter the basin, as determined by the Engineer, the basin shall be cleaned out and restored to the original design elevations, the area stabilized and all temporary modifications to the SWM-1 Drainage Structure (or other control structure) removed.

PRIVATE AND COMMERCIAL ENTRANCES

The type of entrance (I, II, III, IV) to be constructed will be determined by the existing condition at the time of construction.

ALLOWABLE TYPE OF STORM SEWER PIPE (UNLESS OTHERWISE SHOWN ON PLANS)
(SEE ROAD AND BRIDGE STANDARD PC-1 FOR HEIGHT OF COVER LIMITATIONS FOR EACH TYPE)

LOCATION	CONCRETE	CORRUGATED STEEL ALUMINUM COATED TYPE 2 FULLY CONCRETE LINED	ALUMINUM COATED TYPE 2 STEEL SPIRAL RIB	POLYMER COATED (10/0D) CORRUGATED STEEL SPIRAL RIB	POLYMER COATED (10/0D) CORRUGATED STEEL DOUBLE WALL (SMOOTH INTERIOR)	ALUMINUM SPIRAL RIB	POLYVINYLCHLORIDE (PVC) RIBBED PIPE (SMOOTH INTERIOR)	POLYETHYLENE (PE) CORRUGATED TYPE S	POLYPROPLENE (PP) TYPE D OR S
All Except As Noted	X								X

ALLOWABLE TYPE OF PIPE CULVERT (UNLESS OTHERWISE SHOWN ON PLANS)
(SEE ROAD AND BRIDGE STANDARD PC-1 FOR HEIGHT OF COVER LIMITATIONS FOR EACH TYPE)

LOCATION	CONCRETE	ALUMINUM COATED TYPE 2 CORRUGATED STEEL	POLYMER COATED (10/0D) CORRUGATED STEEL	UNCOATED GALVANIZED CORRUGATED STEEL	GALVANIZED STEEL STRUCTURAL PLATE	GALVANIZED STEEL STRUCTURAL PLATE WITH CONCRETE INVERT	CORRUGATED ALUMINUM ALLOY	CORRUGATED ALUMINUM ALLOY STRUCTURAL PLATE	POLYVINYLCHLORIDE (PVC) RIBBED PIPE (SMOOTH INTERIOR)	POLYETHYLENE (PE) CORRUGATED TYPE C	POLYETHYLENE (PE) CORRUGATED TYPE S	POLYPROPLENE (PP) TYPE D OR S
All Except As Noted	X											X

McCORMICK TAYLOR

REV	DATE	DESCRIPTION	BY

SCALE: 1" = NTS
DRAWN BY | DATE
CMY
CHECKED BY | DATE
RJD
DESIGN BY | DATE
CMY
TAX MAP

RESERVIOR STREET

GENERAL NOTES

PUBLIC WORKS DEPARTMENT
CITY OF HARRISONBURG
320 E. MOSBY ROAD
HARRISONBURG, VIRGINIA

SHEET 2

PROPOSED STORM SEWER DESCRIPTIONS

8-1 / 8-10
44' - 24" Storm Sewer Pipe Req'd
Cover = 2'
Inv.(In) = 1421.58' Inv.(Out) = 1419.67'

8-2 / 8-11
55' - 15" Storm Sewer Pipe Req'd
Cover = 2.3'
Inv.(In) = 1421.99' Inv.(Out) = 1421.88'

8-3 / 8-1
234' - 18" Storm Sewer Pipe Req'd
Cover = 2.7'
Inv.(In) = 1425.14' Inv.(Out) = 1421.68'

8-4 / 8-3
73' - 15" Storm Sewer Pipe Req'd
Cover = 4.6'
Inv.(In) = 1426.34' Inv.(Out) = 1425.24'

8-5 / 8-3
192' - 18" Radial Storm Sewer Pipe Req'd
Cover = 4.5'
Inv.(In) = 1435.23' Inv.(Out) = 1425.24'
(838' radius with open joints - using 8' pipe joint lengths with full bevel).Joints are to be opened a maximum of 25% of the spigot or tongue length

8-6 / 8-5
75' - 15" Storm Sewer Pipe Req'd
Cover = 3.2'
Inv.(In) = 1436.85' Inv.(Out) = 1435.33'

8-8 / 8-9
134' - 36" Storm Sewer Pipe Req'd
Cover = 5.6'
87' Jacked & Bored
Inv.(In) = 1416.00' Inv.(Out) = 1413.00'

8-10 / 8-7
34' - 30" Storm Sewer Pipe Req'd
Cover = 3.4'
Inv.(In) = 1419.57' Inv.(Out) = 1419.00'

8-11 / 8-10
81' - 15" Storm Sewer Pipe Req'd
Cover = 2.3'
Inv.(In) = 1421.78' Inv.(Out) = 1421.00'

8-12 / 8-10
46' - 30" Storm Sewer Pipe Req'd
Cover = 3.4'
Inv.(In) = 1419.90' Inv.(Out) = 1419.67'

8-13 / 8-11
46' - 15" Storm Sewer Pipe Req'd
Cover = 2.3'
Inv.(In) = 1422.14' Inv.(Out) = 1421.88'

8-14 / 8-15
46' - 60" Storm Sewer Pipe Req'd
Cover = 3.5'
Inv.(In) = 1413.83' Inv.(Out) = 1413.00'

8-17 / 8-5
125'-18" Storm Sewer Pipe Req'd
Cover=4.8'
Inv.(In)=1437.88' Inv.(Out)=1435.33'

PLAN SHEET 9

9-1
1 Std DI-3B Req'd
H= 7.4' L= 12'
Inv.= 1439.76'
Drop Inlet Slit Trap,Type B Req'd

9-2
1 Std DI-2B Req'd
H= 6.9' L= 12'
Inv.= 1440.26'
Drop Inlet Slit Trap,Type B Req'd

9-3
NOT USED

9-4
NOT USED

9-5
6.7' Std MH-1 or 2 Req'd
Inv.= 1441.11'
1 Std MH-1 Frame and Cover Req'd

9-6
1 Std DI-2B Req'd
H= 3.9' L= 12'
Inv.= 1443.36'
Drop Inlet Slit Trap,Type B Req'd

9-7
1 Std DI-3B Req'd
H= 4.1' L= 12'
Inv.= 1443.15'
Drop Inlet Slit Trap,Type B Req'd

9-8
1 Std DI-3B Req'd
H= 9.6' L= 12'
Inv.= 1441.40'
Drop Inlet Slit Trap,Type B Req'd

9-9
1 Std DI-3C Req'd
H= 5.9' L= 6'
Inv.= 1446.13'
Drop Inlet Slit Trap,Type B Req'd

9-10
1 Std DI-3C Req'd
H= 6.4' L= 6'
Inv.= 1445.79'
Drop Inlet Slit Trap,Type B Req'd

9-11
1 Std DI-3B Req'd
H= 6.9' L= 12'
Inv.= 1445.45'
Drop Inlet Slit Trap,Type B Req'd
Connect Exist.Pipe,Remove Exist.Inlet

9-12
NOT USED

9-13
NOT USED

9-14
5.7' Std MH-1 or 2 Req'd
Inv.= 1441.30'
1 Std MH-1 Frame and Cover Req'd

9-15
Special Design Retaining Wall Req'd
See Detail
Pipe Inv.= 1443.00'

9-16
1 Std DI-3B Req'd
H= 7.25' L= 12'
Inv.= 1444.38'
Drop Inlet Slit Trap,Type B Req'd

9-1 / 8-17
91'-18" Storm Sewer Pipe Req'd
Cover=5.6'
Inv.(In)=1439.76 Inv.(Out)=1437.98'

9-2 / 9-1
73' - 15" Storm Sewer Pipe Req'd
Cover = 5.1'
Inv.(In) = 1440.26' Inv.(Out) = 1439.86'

9-5 / 9-2
48' - 15" Storm Sewer Pipe Req'd
Cover = 3.4'
Inv.(In) = 1441.11' Inv.(Out) = 1440.36'

9-6 / 9-7
29' - 15" Storm Sewer Pipe Req'd
Cover = 2.2'
Inv.(In) = 1443.36' Inv.(Out) = 1443.25'

9-9 / 9-10
69' - 15" Storm Sewer Pipe Req'd
Cover = 4.1'
Inv.(In) = 1446.13' Inv.(Out) = 1445.89'

9-10 / 9-11
66' - 15" Storm Sewer Pipe Req'd
Cover = 4.7'
Inv.(In) = 1445.79' Inv.(Out) = 1445.55'

9-11 / 10-1
142' - 18" Storm Sewer Pipe Req'd
Cover = 4.9'
Inv.(In) = 1445.45' Inv.(Out) = 1444.84'

9-16 / 9-8
11' - 15" Storm Sewer Pipe Req'd
Cover = 8.24'
Inv.(In) = 1444.48' Inv.(Out) = 1443.39'

9-7 / 9-14
18' - 15" Storm Sewer Pipe Req'd
Cover = 1.4'
Inv.(In) = 1443.15' Inv.(Out) = 1441.40'

9-14 / 9-5
33' - 15" Storm Sewer Pipe Req'd
Cover = 3.1'
Inv.(In) = 1441.30' Inv.(Out) = 1441.21'

9-15 / 9-5
12' - 23"x14" Storm Sewer Pipe Req'd
Cover = 2.3'
Inv.(In) = 1443.00' Inv.(Out) = 1441.21'

PLAN SHEET 9B

9B-1
1 Std DI-3B Req'd
H= 5.6' L= 12'
Inv.= 1435.68'
Extend Exist.15" RCP 2'
Drop Inlet Slit Trap,Type B Req'd

9B-2
1 Std DI-3B Req'd
H= 5.8' L= 12'
Inv.= 1436.65'
Extend Exist.15" RCP 2'
Drop Inlet Slit Trap,Type B Req'd

9B-3
7.5' Std MH-1 or 2 Req'd
Inv.= 1430.83'
1 Std MH-1 Frame and Cover Req'd

9B-1 / 9B-3
44' - 15" Storm Sewer Pipe Req'd
Cover = 4'
Inv.(In) = 1435.68' Inv.(Out) = 1430.83'

PLAN SHEET 10

10-1
1 Std DI-3B Req'd
H= 6.2' L= 12'
Inv.= 1444.74'
Drop Inlet Slit Trap,Type B Req'd

10-2
1 Std DI-3B Req'd
H= 6.4' L= 12'
Inv.= 1443.23'
Drop Inlet Slit Trap,Type B Req'd

10-3
1 Std DI-3B Req'd
H= 5.9' L= 12'
Inv.= 1444.20'
Drop Inlet Slit Trap,Type B Req'd

10-4
1 Std DI-2B Req'd
H= 7.3' L= 12'
Inv.= 1439.57'
Drop Inlet Slit Trap,Type B Req'd

10-5
1 Std DI-2B Req'd
H= 4.7' L= 12'
Inv.= 1431.94'
Drop Inlet Slit Trap,Type B Req'd

10-6
1 Std DI-3B Req'd
H= 4.0' L= 12'
Inv.= 1432.69'
Drop Inlet Slit Trap,Type B Req'd

10-7
NOT USED

10-8
1 Std DI-3B Req'd
H= 4.7' L= 12'
Inv.= 1421.97'
Drop Inlet Slit Trap,Type B Req'd

10-9
1 Std DI-3B Req'd
H= 4.0' L= 12'
Inv.= 1423.33' (Match Exist.)
Drop Inlet Slit Trap,Type B Req'd
Connect Exist.Pipe,Remove Exist.Inlet

10-10
NOT USED

10-11
1 Std DI-2B Req'd
H= 3.0' (Below Min.),L= 12'
Inv.= 1428.30' (Match Exist.)
Drop Inlet Slit Trap,Type B Req'd

10-12
1 Std JB-1,Type C Req'd
H= 3',W=2'
Inv.= 1428.18' (Match Exist.)
Connect Exist.Pipes
1 St'd MH-1 Frame and Cover Req'd

10-1 / 10-2
81' - 24" Storm Sewer Pipe Req'd
Cover = 3.6'
Inv.(In) = 1444.74' Inv.(Out) = 1443.33'

10-2 / 10-4
119' - 24" Storm Sewer Pipe Req'd
Cover = 4.1'
Inv.(In) = 1443.23' Inv.(Out) = 1439.67'

10-3 / 10-2
74' - 15" Storm Sewer Pipe Req'd
Cover = 4.1'
Inv.(In) = 1444.20' Inv.(Out) = 1443.33'

10-4 / 10-5
201' - 24" Storm Sewer Pipe Req'd
Cover = 2.2'
Inv.(In) = 1439.57' Inv.(Out) = 1432.04'

10-5 / 10-8
184' - 24" Storm Sewer Pipe Req'd
Cover = 2.2'
Inv.(In) = 1431.95' Inv.(Out) = 1422.07'

10-6 / 10-5
60' - 15" Storm Sewer Pipe Req'd
Cover = 2.2'
Inv.(In) = 1432.70' Inv.(Out) = 1432.39'

10-8 / 11-1
134' - 24" Storm Sewer Pipe Req'd
Cover = 2.2'
Inv.(In) = 1421.97' Inv.(Out) = 1416.72'

Ex.14A / 10-2
21' - 18" Storm Sewer Pipe Req'd
Cover = 4'
Inv.(In) = 1443.54' Inv.(Out) = 1443.33'

10-11 / 10-12
5' - 15" Storm Sewer Pipe Req'd
Cover = 1'
Inv.(In) = 1428.30' Inv.(Out) = 1428.18'

PLAN SHEET 11

11-1
1 Std DI-3B Req'd
H= 4.8' L= 12'
Inv.= 1416.62'
Drop Inlet Slit Trap,Type B Req'd

11-2
5.0' Std MH-1 or 2 Req'd
Inv.= 1416.31'
1 Std MH-1 Frame and Cover Req'd

11-3
1 Std DI-3C Req'd
H= 2.5'(Below Min.) L= 6'
Inv.= 1415.85'
Drop Inlet Slit Trap,Type B Req'd

11-4
2.7' Std MH-1 or 2 Req'd
Inv.= 1415.51'
Connect to Exist.Pipe
1 Std MH-1 Frame and Cover Req'd

11-5
1 Std DI-3C Req'd
H= 2.6' (Below Min.) L= 6'
Inv.= 1415.81'
Drop Inlet Slit Trap,Type B Req'd

11-6
1 Std DI-3C Req'd
H= 4.1' L= 6'
Inv.= 1413.62'
Drop Inlet Slit Trap,Type B Req'd

11-7
3.9' Std MH-1 or 2 Req'd
Inv.= 1413.25'
1 Std MH-1 Frame and Cover Req'd

11-8
1 Std DI-3C Req'd
H= 4.0' L=6'
Inv.= 1416.36'
Extend Exist 15" RCP 2'
Drop Inlet Slit Trap,Type B Req'd

11-9
1 Std DI-3A Req'd
H= 4.2'
Inv.= 1411.84'
Drop Inlet Slit Trap,Type B Req'd

11-10
NOT USED

11-11
NOT USED

11-12
4.1' Std MH-1 or 2 Req'd
Inv.= 1413.71'
1 Std MH-1 Frame and Cover Req'd
Connect Exist.Pipe,Remove Exist.Inlet

11-13
3.4' Std MH-1 or 2 Req'd
Inv.= 1414.95'
1 Std MH-1 Frame and Cover Req'd
Connect Exist.Pipe,Remove Exist.Inlet

11-14
1 Std DI-3B Req'd
H= 3.8' (Below Min.) L= 12'
Inv.= 1417.84'
Drop Inlet Slit Trap,Type B Req'd
Connect Exist.Pipe,Remove Exist.Inlet

11-15
Adjust Exist MH (-0.60')

11-1 / 11-2
12' - 24" Storm Sewer Pipe Req'd
Cover = 2.2'
Inv.(In) = 1416.62' Inv.(Out) = 1416.41'

11-2 / 11-13
64' - 24" Storm Sewer Pipe Req'd
Cover = 1.4'
Inv.(In) = 1416.31' Inv.(Out) = 1415.05'

11-3 / 11-4
8' - 15" Storm Sewer Pipe Req'd
Cover = 1.3'
Inv.(In) = 1415.85' Inv.(Out) = 1415.51'

11-5 / 11-4
60' - 15" Storm Sewer Pipe Req'd
Cover = 1.3'
Inv.(In) = 1415.81' Inv.(Out) = 1415.51'

11-6 / 11-7
6' - 15" Storm Sewer Pipe Req'd
Cover = 2'
Inv.(In) = 1413.62' Inv.(Out) = 1413.25'

11-9 / 11-15
18' - 15" Storm Sewer Pipe Req'd
Cover = 2'
Inv.(In) = 1411.84' Inv.(Out) = 1411.74'

PLAN SHEET 11B

11B-1
Not Used

11B-2
Not Used

11B-3
1 Std DI-3B Req'd
H= 4.7' L= 12'
Inv.= 1416.57'
Connect Exist.Pipe
Drop Inlet Slit Trap,Type B Req'd

11B-4
4.4' Std MH-1 or 2 Req'd
Inv.= 1416.69'
Connect Exist.Pipe,Remove Exist.Inlet
1 Std MH-1 Frame and Cover Req'd

11B-5
5.9' Std MH-1 or 2 Req'd
Inv.= 1422.65'
Connect Exist.Pipe,Remove Exist.Inlet
1 Std MH-1 Frame and Cover Req'd

11B-6
1 Std DI-3B Req'd
H= 5.2' L= 12'
Inv.= 1424.02'
Connect Exist.Pipe
Drop Inlet Slit Trap,Type B Req'd

11B-7
1 Std DI-3B Req'd
H= 5.0' L= 12'
Inv.= 1432.96'
Drop Inlet Slit Trap,Type B Req'd

11B-8
5.7' Std MH-1 or 2 Req'd
Inv.= 1432.00'
1 Std MH-1 Frame and Cover Req'd

11B-9
Not Used

11B-10
Not Used

11B-11
Not Used

11B-12
Not Used

11B-13
1 Std DI-3B Req'd
H= 4.0' L= 12'
Inv.= 1434.18'
Drop Inlet Slit Trap,Type B Req'd

11B-14
6.9' Std MH-1 or 2 Req'd
Inv.= 1429.61'
Connect Exist.Pipe,Remove Exist.Inlet
1 Std MH-1 Frame and Cover Req'd

11B-15
Not Used

11B-1 / 11B-15
Not Used

11B-15 / 11B-2
Not Used

11B-4 / 11B-3
9' - 24" Storm Sewer Pipe Req'd
Cover = 3.1'
Inv.(In) = 1416.69' Inv.(Out) = 1416.57'

11B-6 / 11B-5
16' - 15" Storm Sewer Pipe Req'd
Cover = 3.9'
Inv.(In) = 1424.02' Inv.(Out) = 1422.75'

11B-7 / 11B-8
10' - 15" Storm Sewer Pipe Req'd
Cover = 3.7'
Inv.(In) = 1432.96' Inv.(Out) = 1432.10'

11B-8 / 11B-14
28' - 15" Storm Sewer Pipe Req'd
Cover = 4.4'
Inv.(In) = 1432.00' Inv.(Out) = 1429.71'

11B-10 / 11B-9
Not Used

11B-12 / 11B-11
Not Used

11B-13 / Ex.77
50' - 15" Storm Sewer Pipe Req'd
Cover = 2.2'
Inv.(In) = 1434.18' Inv.(Out) = 1429.56'

Note: St'd ST-1 Req'd for All Structures with Depths of 4'-0" or greater.

McCORMICK TAYLOR

REV	DATE	DESCRIPTION	BY

SCALE: N.T.S
DRAWN BY | DATE
JJK
CHECKED BY | DATE
MAY
DESIGN BY | DATE
JJK
TAX MAP

RESERVOIR STREET
PROPOSED STORM
PUBLIC WORKS DEPARTMENT
CITY OF HARRISONBURG
320 E MOSBY ROAD
HARRISONBURG, VIRGINIA

SHEET 2B1

PROPOSED STORM SEWER SUMMARY

STRUCTURE NO.	STRUCTURE NO.	DESIGN HEIGHT OF COVER	STORM SEWER PIPE						CONCRETE PIPE		ELLIPTICAL CONCRETE PIPE	HEIGHT OF STR	DROP INLETS								DI-1	Adjust MH-1 Top	MANHOLE MH-1 OR 2	STR. STEEL JB-1	SWM-1	FRAME & COVER MH 1	End Section			Class A3 Concrete	EROSION CONTROL STONE EC-1	REMARKS
			PIPE DIAMETER						PIPE DIAMETER		PIPE DIA		DI-2B	DI-3A	DI-3B		DI-3C	DI-3C	DI-3BB								ES-1 or 2					
															LENGTH																	
													12'	2.5'	6'	8'	12'	6'	12'	12'												
		FT.	15"	18"	24"	30"	36"	60"	15"	36"	23"X14"	FT.	EA	EA	EA	EA	EA	EA	EA	EA	EA	L.F.	L.F.	LB	LF	EA	30"	36"	60"	CY	TON	
	3-1											6.1				1																
	3-2											6.9					1															
	3-3											9.6								1												
	3-4											6									1											
3-1	3-2	4	91																													
3-2	4-1	4	174																													
3-3	3-1	2	132																													
	3-5											6									1											
3-4	3-5	4	68																													
3-5	4-7	4	109																													
	4-1											7.5			1																	
	4-2											5			1																	
	4-3											7					1															
	4-4											4					1															
	4-5											6.2					1															
	4-6											4					1															
	4-7																						6.4			1						
4-1	4-3	5		263																												
4-2	4-1	3	73																													
4-3	4-5	5		106																												
4-4	4-6	3	207																													
4-5	5-1	5		283																												
4-6	5-2	3	167																													
4-7	Ex.70	1	40																													
	5-1											7.4					1															
	5-2											4.6					1															
	5-3											6.9					1															
	5-4											6.2					1															
	5-5											8.3					1															
	5-6											4					1															
	5-7											7.2						1														
5-1	5-3	3		283	-	-		-	-	-																						
5-2	5-1	3	87	-	-	-		-	-	-																						
5-3	5-5	5		337																												
5-4	5-3	4	73																													
5-5	6-1	7		196																												
5-6	5-5	2	73																													
	6-1											8.8					1															
	6-2											5.4					1															
	6-3											7.4					1															
	6-4											4.2					1															
	6-5																						3.4			1						
	6-6											3.3									1											
	6-7											4.8									2											Cast in place with no center wall
	6-8																					0.35										
	6-9																					0.24										
	6-10																						9.5			1						
	6-11																					0.24										
	6-12											7.6									1											
	6-13																						4.5			1						
6-1	6-3	5			247																											
6-2	6-9	4			13																											
6-3	7-2	4			296																											
6-4	6-3	2	73																													
6-5	6-8	2			48																											
6-6	6-5	2			16																											
6-7	6-2	3			9																											
6-12	6-10	6			23																											
6-13	6-12	6	24																													
	7-1											4					1															
	7-2											7.1					1															
	7-3											5.7					1															
	7-4											4					1															
	7-9											5.5									1											
	7-10	1	49																				9.4			1						
	7-11											4.2					1															
	7-12											4.1					1															
	7-13																					1.16										
	7-14																					1.8										
	7-15																					1.92										
	7-16																					2.48										

STRUCTURE NO.	STRUCTURE NO.	DESIGN HEIGHT OF COVER	STORM SEWER PIPE						CONCRETE PIPE		ELLIPTICAL CONCRETE PIPE	HEIGHT OF STR	DROP INLETS								DI-1	Adjust MH-1 Top	MANHOLE MH-1 OR 2	STR. STEEL JB-1	SWM-1	FRAME & COVER MH 1	End Section			Class A3 Concrete	EROSION CONTROL STONE EC-1	REMARKS
			PIPE DIAMETER						PIPE DIAMETER		PIPE DIA		DI-2B	DI-3A	DI-3B		DI-3C	DI-3C	DI-3BB								ES-1 or 2					
															LENGTH																	
													12'	2.5'	6'	8'	12'	6'	12'	12'												
		FT.	15"	18"	24"	30"	36"	60"	15"	36"	23"X14"	FT.	EA	EA	EA	EA	EA	EA	EA	EA	EA	L.F.	L.F.	LB	LF	EA	30"	36"	60"	CY	TON	
7-1	7-2	2	77																													
7-2	7-3	3				330																										
7-3	8-12	3				323																										
7-4	7-3	2	73																													
7-9	7-16	4	39																													
7-11	7-9	2	26																													
7-12	7-11	2	32																													
	8-1											4.7							1													
	8-2											4.1							1													
	8-3											7.8						1														
	8-4											6.6						1														
	8-5											6.1						1														
	8-6											4.7						1														
	8-7																										1				90	
	8-8											6.5													8							
	8-9																											1				
	8-10											6.5							1													
	8-11											4.1							1													
	8-12											6.3							1													
	8-13											4.1							1													
	8-14											12.2												2064		1				10.5		SL-1 Req'd
	8-15																												1		165	
	8-16											16.2												2064		1				11.9		SL-1 Req'd
	8-17											7.2																				
8-1	8-10	2			44																											
8-2	8-11	2	55																													
8-3	8-1	3		234																												
8-4	8-3	5	73																													
8-5	8-3	5		192																												
8-6	8-5	3	75																													
8-8	8-9	2					134																									
8-10	8-7	3				34																										
8-11	8-10	2	81																													
8-12	8-10	3				46																										
8-13	8-11	2	46																													
8-14	8-15	4						46																								
8-17	8-5	5		125																												
	9-1											7.4						1														
	9-2											6.9	1																			
	9-5																							6.7			1					
	9-6											3.9	1																			
	9-7											4.1						1														
	9-8											9.6						1														
	9-9											5.9							1													
	9-10											6.4							1													
	9-11											6.9						1														
	9-14																							5.7			1					
	9-15																															Special Design Ret. Wall (See Detail)
	9-16											7.25						1														
9-1	8-17	6		91																												
9-2	9-1	5	73																													
9-5	9-2	3	48																													
9-6	9-7	2	29																													
9-9	9-10	4	69																													
9-10	9-11	5	67																													
9-11	10-1	5		142																												
9-7	9-14	1	18																													
9-14	9-5	3	33																													
9-16	9-8	8	11																													
9-15	9-5	2									12																					

McCORMICK TAYLOR

REV	DATE	DESCRIPTION	BY

SCALE: 1" = NTS
DRAWN BY | DATE
CHECKED BY | DATE
DESIGN BY | DATE
TAX MAP

RESERVOIR STREET

DRAINAGE SUMMARY

PUBLIC WORKS DEPARTMENT
CITY OF HARRISONBURG
320 E MOSBY ROAD
HARRISONBURG, VIRGINIA

SHEET
2B(2)

PROPOSED DRAINAGE & UNDERDRAIN SUMMARY

STRUCTURE NO.	STRUCTURE NO.	DESIGN HEIGHT OF COVER	STORM SEWER PIPE						CONCRETE PIPE		ELLIPTICAL CONCRETE PIPE	HEIGHT OF STR	DROP INLETS								DI-1	Adjust MH-1 Top	MANHOLE MH 1 OR 2	STR. STEEL JB-1	SWM-1	FRAME & COVER MH 1	End Section			Class A3 Concrete	EROSION CONTROL STONE EC-1	REMARKS
			PIPE DIAMETER						PIPE DIAMETER		PIPE DIA		DI-2B	DI-3A	DI-3B		DI-3C	DI-3C	DI-3BB								ES-1 or 2					
													LENGTH																			
													12'	2.5'	6'	8'	12'	6'	12'	12'							30"	36"	60"			
		FT.	15"	18"	24"	30"	36"	60"	15"	36"	23"X14"	FT.	EA	EA	EA	EA	EA	EA	EA	EA	EA	L.F.	L.F.	LB	LF	EA	EA	EA	EA	CY	TON	
	9B-1	4							2			5.6					1															
	9B-2	4							2			5.8					1															
	9B-3																						7.5			1						
9B-1	9B-3	4	44																													
	10-1											6.2					1															
	10-2											6.5					1															
	10-3											5.9					1															
	10-4											7.3	1																			
	10-5											4.7	1																			
	10-6											4					1															
	10-8											4.7					1															
	10-9											4					1															
	10-11											3	1																			
	10-12											3												1294		1				4.9		
10-1	10-2	4			81																											
10-2	10-4	4			119																											
10-3	10-2	4	74																													
10-4	10-5	2			201																											
10-5	10-8	2			184																											
10-6	10-5	2	60																													
10-8	11-1	2			134																											
Ex.14A	10-2	4		21																												
10-11	10-12	1	5																													
	11-1											4.8					1															
	11-2											5											5			1						
	11-3											2.5						1														
	11-4																						2.7			1						
	11-5											2.6						1														
	11-6											4.1						1														
	11-7																						3.9			1						
	11-8	2							2			4						1														
	11-9											4.2		1																		
	11-12																						4.1			1						
	11-13																						3.4			1						
	11-14											3.8					1															
	11-15																						0.6									(Adjust Down)
11-1	11-2	2			12																											
11-2	11-13	1			64																											
11-3	11-4	1	8																													
11-5	11-4	1	60																													
11-6	11-7	2	6																													
11-9	11-15	2	18																													
	11B-3											4.7					1															
	11B-4																						4.4			1						
	11B-5																						5.9			1						
	11B-6											5.2					1															
	11B-7											5					1															
	11B-8																						5.7			1						
	11B-13											4					1															
	11B-14																						6.9			1						
11B-4	11B-3	3			9																											
11B-6	11B-5	4	16																													
11B-7	11B-8	4	10																													
11B-8	11B-14	4	28																													
11B-13	Ex.77	2	50																													
PROJECT TOTALS			2744	2273	1500	733	134	46	6	-	12	455	5	1	2	1	44	7	6	1	7	8.19	95.7	5422	8	20	1	1	1	27.3	255	

Street	Begin Station	End Station	Travelway R/L	UD-4 Feet	CD-1 Feet	CD-2 Feet	Outlet Pipe	Remarks
RESERVOIR	10+00	11+52	R	148				Tie to Structure 3-1
	10+00	12+03	L	211				Tie to Structure 3-2
	11+54	13+92	R	243				Tie to Structure 4-2
	12+05	13+92	L	181				Tie to Structure 4-1
	13+94	16+86	R	304				Tie to Structure 4-4
	13+94	16+62	L	259				Tie to Structure 4-3
	15+07	15+42	R		48			
	15+08	15+41	L/R		47			
	16+89	18+88	R	207				Tie to Structure 4-6
	16+65	17+76	L	108				Tie to Structure 4-5
	18+90	20+54	R	167				Tie to Structure 5-2
	17+78	20+67	L	284				Tie to Structure 5-1
	20+56	12+61	R	260				End Station on Stonewall Dr./ Tie to Structure 5-7
	20+69	23+51	L	284				Tie to Structure 5-3
	22+00	23+51	R	152				Tie to Structure 5-4
	23+53	26+89	R	336				Tie to Structure 5-6
	23+53	26+89	L	337				Tie to Structure 5-5
	26+92	28+80	R	189				Tie to Structure 6-2
	26+92	28+88	L	197				Tie to Structure 6-1
	28+82	31+37	R	256				Tie to Structure 6-4
	28+90	11+11	L	109				End Station on Ridgeville / Tie to Structure 6-1
	11+09	31+37	L	229				Begin Station on Ridgeville / Tie to Structure 6-3
	31+39	34+12	R	272				Tie to Structure 7-1
	31+39	34+35	L	295				Tie to Structure 7-2
	34+14	37+74	R	369				Tie to Structure 7-4
	34+47	34+68	L	23				Tie to Structure 7-2
	35+63	37+77	L	208				Tie to Structure 7-3
	37+77	41+20	R	354				Tie to Structure 8-13
	37+80	41+19	L	329				Tie to Structure 8-12
	41+22	41+66	R	47				Tie to Structure 8-11
	41+22	41+69	L	47				Tie to Structure 8-10
	41+76	42+27	R	55				Tie to Structure 8-11
	41+78		L/R			81		Tie to Structures 8-10 & 8-11
	41+80	42+28	L	48				Tie to Structure 8-10
	42+31	44+90	R	57				Tie to Structure 8-2
	42+30	44+59	L	239				Tie to Structure 8-1
	44+52	44+94	L		58			Tie to Structure 8-3
	44+52	44+82	R		41			Tie to Structure 8-4
	44+62	46+46	L	193				Tie to Structure 8-3
	44+62	46+46	R	177				Tie to Structure 8-4
	46+48	47+67	L	125				Tie to Structure 8-5
	47+70	48+59	L	93				Tie to Structure 8-17
	46+49	48+59	R	192				Tie to Structure 8-6
	48+60	51+52	R	295				Tie to Structure 9-2
	51+60	13+05	R	306			20	End Station on Neff Ave. East / Connect to Outlet Pipe
	48+60	12+87	R	379				End Station on Neff Ave. West
	12+90	55+44	R	309				Begin Station on Neff Ave. East / Connect to Outlet Pipe
	53+49	55+46	R	198				Tie to Structure 10-3
	10+86	53+19	L	77				Start Station on Neff Ave. West / Tie to Structure 9-11
	53+23	54+63	L	141				Tie to Structure 10-1
	54+66	55+46	L	83				Tie to Structure 10-2
	55+50	58+69	R	321				Tie to Structure 10-6
	56+68	58+71	L	206				Tie to Structure 10-5
	58+72	60+42	R	170				Tie to Structure 10-9
	58+74	60+57	L	187				Tie to Structure 10-8
	60+46	61+90	R	145				Tie to Structure 11-14
	60+61	61+94	L	134				Tie to Structure 11-1
	61+96	62+44	R	50				Tie to Structure 11-8
	61+98	11+14	L	115				End Station on Unv. Blvd. West / Tie to Structure 11-3
	63+73	65+08	R	103				
	11+14	65+21	L	279				Begin Station on Unv. Blvd. West / Tie to Structure
Neff. Ave. West	10+88	17+42	R	312				Tie to Structure 9-10
	14+02	17+41	R	341				Tie to Structure 9B-2
	10+88	12+70	L	182				Tie to Structure 9-9
	13+85	17+44	L	355				Tie to Structure 9B-1
Costco	10+32	12+73	R	270				Tie to Structure 10-4
Unv.Blvd. East	10+33	11+42	R	114				Tie to Structure 11-8
	10+47	11+44	L	124				Tie to Structure 11-6
Unv.Blvd. West	11+25	13+33	R	209				Tie to Structure 11-5
	13+38	15+35	R	198				Tie to Structure 11B-4
	15+40	17+33	R	194				Tie to Structure 11B-5
	11+25	13+00	L	175				Tie to Exisiting Structure 4D
	17+22	18+77	L	161				Tie to Structure 11B-13
	17+37	18+25	R	134				Tie to Structure 11B-7
	Project Totals			**13851**	**194**	**81**	**20**	

McCORMICK TAYLOR

REV	DATE	DESCRIPTION	BY

SCALE: 1" = NTS
DRAWN BY | DATE
CHECKED BY | DATE
DESIGN BY | DATE
TAX MAP

RESERVOIR STREET

UNDERDRAIN SUMMARY

PUBLIC WORKS DEPARTMENT
CITY OF HARRISONBURG
320 E MOSBY ROAD
HARRISONBURG, VIRGINIA

SHEET
2B(3)

PAVEMENT SUMMARY

			SURFACE		BASE COURSE				SUBBASE				RESURFACING		ENTRANCES						
PLAN SHEET NO.	LOCATION	STATION TO STATION	AREA	ASPH. CONC. TYPE SM-12.5D (165LBS /S.Y.)	AREA	ASPH. CONC. BASE COURSE BM-25.0A (4" DEPTH)		ASPH. CONC. BASE COURSE BM-25.0A (4" DEPTH)	AREA	AGGR. BASE MAT'L TYPE 1 21B (8" DEPTH)		AGGR. BASE MAT'L TYPE 1 21B (VARIES DEPTH)	AREA	OVERLAY ASPH. CONC. TYPE SM-12.5D (165LBS /S.Y.)	AREA	AGGR. BASE MAT'L TYPE 1 21B (6" DEPTH)	AGGR. BASE MAT'L TYPE 1 21B (4" DEPTH)		ASPH. CONC. BASE COURSE BM-25.0A (4" DEPTH)	ASPH. CONC. TYPE SM-12.5D (220LBS /S.Y.)	CONCRETE ENTR. 7"
			S.Y.	TON	S.Y.	TON		TON	S.Y.	TON	TON	TON	S.Y.	TON	S.Y.	TON	TON	TON	TON	TON	
6	RESERVOIR STREET	27+00 TO 34+00	3663	302	3663	806	-	177	3663	1714	-	100	1074	88	-	-	-	-	-	-	-
	RIDGEVILLE DRIVE	10+34.01 TO 11+23.56	297	25	297	-	-	49	297	139	-	21	-	-	-	-	-	-	-	-	-
	TYPE III ENTR. CG-9D	10+79 LT	-	-	-	-	-	-	-	-	-	-	-	-	14	5	-	-	-	2	-
	TYPE II, III ENTR. CG-9D	29+22 RT	-	-	-	-	-	-	-	-	-	-	-	-	518	121	40	-	76	38	173
	TYPE II ENTR. CG-9D	31+89 RT	-	-	-	-	-	-	-	-	-	-	-	-	69	-	16	-	-	-	69
	TYPE III ENTR. CG-9D	32+18 RT	-	-	-	-	-	-	-	-	-	-	-	-	49	17	-	-	-	5	-
7	RESERVOIR STREET	34+00 TO 41+00	3990	329	3990	878	-	108	3990	1867	-	267	655	54	-	-	-	-	-	-	-
	FOLEY ROAD	10+34.15 TO 11+45.00	355	29	355	-	-	78	355	166	-	44	-	-	-	-	-	-	-	-	-
	TYPE III ENTR. CG-9D	34+50 RT	-	-	-	-	-	-	-	-	-	-	-	-	27	13	-	-	-	4	-
	TYPE III ENTR. CG-9B	11+16 LT	-	-	-	-	-	-	-	-	-	-	-	-	28	10	-	-	-	3	-
	TYPE III ENTR. CG-9B	11+08 RT	-	-	-	-	-	-	-	-	-	-	-	-	147	52	-	-	-	16	-
	TYPE III ENTR. CG-9D	36+80 LT	-	-	-	-	-	-	-	-	-	-	-	-	145	51	-	-	-	16	-
	TYPE III ENTR. CG-9D	38+44 LT	-	-	-	-	-	-	-	-	-	-	-	-	81	28	-	-	-	9	-
	TYPE IV ENTR. CG-11	38+53 RT	-	-	-	-	-	-	-	-	-	-	146	12	-	-	-	-	-	-	-
8	RESERVOIR STREET	41+00 TO 48+00	5276	435	5276	1161	-	-	5276	2469	-	218	-	-	-	-	-	-	-	-	-
	WOODLAND DRIVE	10+35 TO 12+62	787	65	787	-	-	173	787	368	-	66	123	11	-	-	-	-	-	-	-
	TYPE IV ENTR. CG-11	45+90 LT	-	-	-	-	-	-	-	-	-	-	-	-	126	44	-	-	28	14	-
	TYPE IV ENTR. CG-11	47+23 LT	-	-	-	-	-	-	-	-	-	-	-	-	55	19	-	-	12	6	-
	TYPE III ENTR. CG-9D	47+16 RT	-	-	-	-	-	-	-	-	-	-	-	-	288	101	-	-	-	32	-
9	RESERVOIR STREET	48+00 TO 55+00	3047	252	3047	670	-	473	3047	1426	-	178	2077	171	-	-	-	-	-	-	-
	NEFF AVE. WEST	10+36.81 TO 12+35	532	44	532	117	-	-	532	249	-	56	933	76	-	-	-	-	-	-	-
	NEFF AVE. EAST	10+31.21 TO 11+75	387	31	387	85	-	-	387	181	-	36	582	48	-	-	-	-	-	-	-
	LISIMI	10+34.09 TO 11+00	56	4	56	-	-	12	56	26	-	20	-	-	-	-	-	-	-	-	-

McCORMICK TAYLOR

REV	DATE	DESCRIPTION	BY

SCALE: 1" = NTS
DRAWN BY DATE
CHECKED BY DATE
DESIGN BY DATE
TAX MAP

RESERVOIR STREET
PAVEMENT SUMMARY
PUBLIC WORKS DEPARTMENT
CITY OF HARRISONBURG
320 E MOSBY ROAD
HARRISONBURG, VIRGINIA

SHEET
2D(2)

GRADING DIAGRAM

- ⊢130⊣ Fill — Denotes fill quantity from computer listings and/or manual cross-sections.
- ⊢130⊣ Cut — Denotes cut quantity from computer listings and/or manual cross-sections. Quantity adjusted for demolition of pavement.
- Denotes C.Y. root mat material in cut areas which is included in Regular Excavation quantities.
- Denotes C.Y. root mat material removed from fill sections and backfilled with (specify material) (Backfill with Regular Excavation and/or Borrow Excavation)
- Denotes C.Y. Regular Excavation from private entrances.
- Denotes C.Y. fill for private entrances.
- Denotes C.Y. unsuitable material above subgrade which is included in Regular Excavation.
- Denotes C.Y. of excavation of unsuitable mat'l. below subgrade and backfilled with (specify material)
- Denotes C.Y. Regular Excavation from drainage ditches.
- Denotes C.Y. Minor Structure Excavation.
- Denotes C.Y. existing pavement to be removed as "Demolition of Pavement" from fill sections and backfilled with (specify mat'l.)
- Denotes C.Y. existing pavement to be removed as Demolition of Pavement in cut sections within construction limits and is not included in the Regular Excavation quantities.
- Denotes C.Y. Haul. (Haul Material shown will be C.Y. of mat'l. not compacted.)
- Denotes C.Y. fill for S.W.M. (Stormwater Management Basin)
- Denotes C.Y. cut from S.W.M. (Stormwater Management Basin)
- Denotes Borrow Material (Min. CBR, specify)
- Denotes Surplus Material.
- Denotes C.Y. fill for drainage ditches.

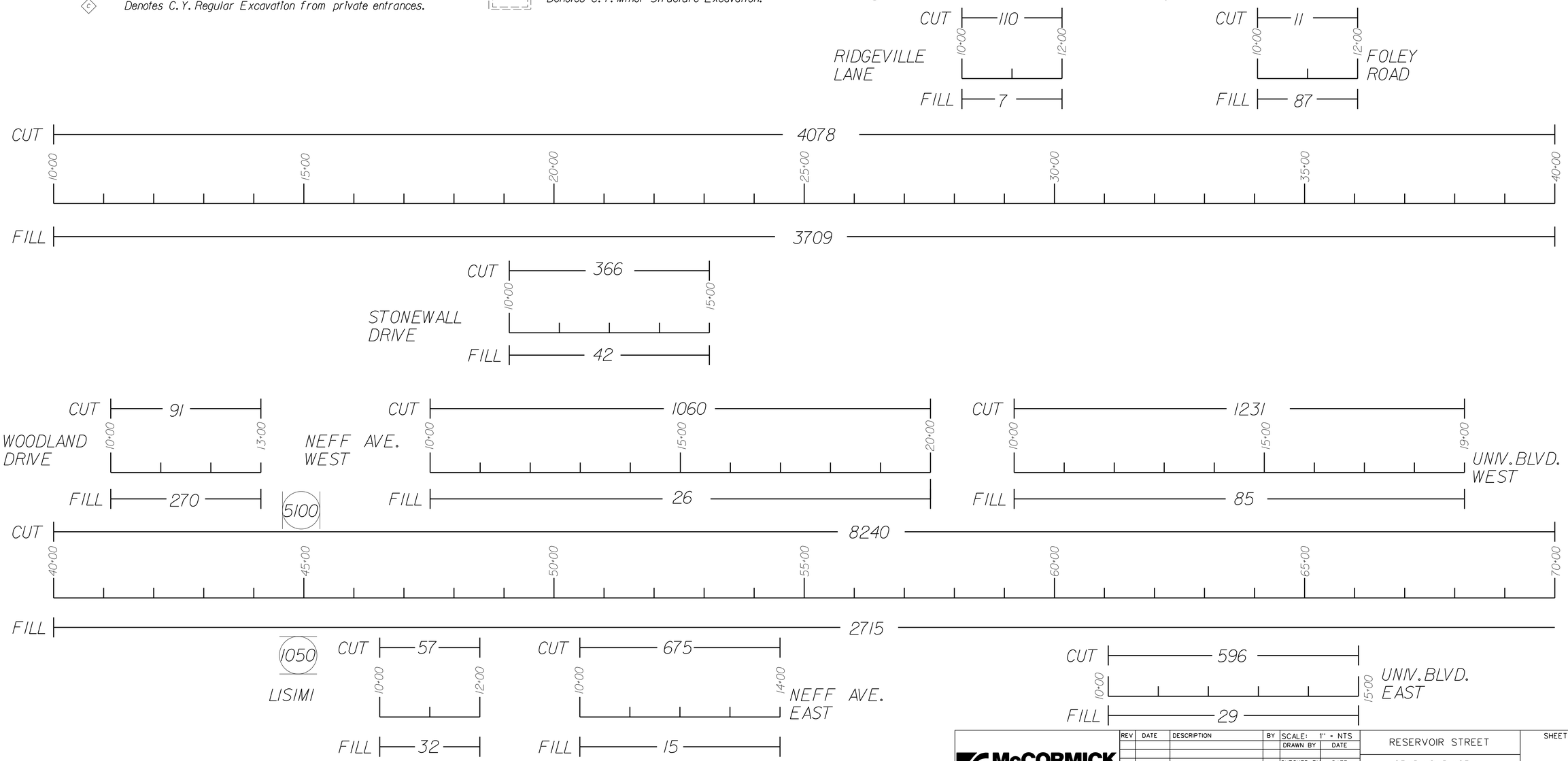

McCORMICK TAYLOR

REV	DATE	DESCRIPTION	BY

SCALE: 1" = NTS
DRAWN BY DATE
CHECKED BY DATE
DESIGN BY DATE
TAX MAP

RESERVOIR STREET

GRADING DIAGRAM

PUBLIC WORKS DEPARTMENT
CITY OF HARRISONBURG
320 E MOSBY ROAD
HARRISONBURG, VIRGINIA

SHEET 2D(6)

GRADING DIAGRAM SUMMARY

Location	Roadway Cut (1) (8)	Root Mat in Cut Sections	Root Mat in Fill Sections	Cut - Ditches (9)	Fill - Ditches (9)	Unsuitable Material: Below Subgrade	Unsuitable Material: Above Subgrade	Roadway Fill (10) (8)	Entrances: Cut	Entrances: Fill	Total Regular Excavation (6)	Total Fill	Demolition of Pavement (2)	Minor Structure Excavation (2)	Stormwater Management Basins (5) (2): Cut	Stormwater Management Basins (5) (2): Fill	Borrow (6) (Embankment)
	C.Y.	C.Y.	C.Y.	C.Y.	C.Y.	C.Y.	C.Y.	C.Y.	C.Y.	C.Y.	C.Y.	C.Y.	C.Y.	C.Y.	C.Y.	C.Y.	C.Y.
RESERVOIR	12318					400		6424	944	148					5100	1050	
STONEWALL	366							42									
RIDGEVILLE	110							7									
FOLEY	11							87									
WOODLAND	91							270									
LISIMI	57							32									
NEFF E.	675							15									
NEFF W.	1060							26									
UNIV.E	596							29									
UNIV.W.	1231							85									
FORMULAS	C	D	E	F	G	H	I	J	K	L	M	N	O	P	Q	R	S
TOTALS	(3) 16515	(4)	(3) (7)	(3)	(7)	(11) 400	(4)	(7) 7017	(3) 944	(7) 148	17459	7165			5100	(7) 1050	

FORMULAS

Roadway Cut (C) = Unadjusted Cut from Computer Listings or Manual Cross-Sections minus (-) Demolition of Pavement.

Roadway Fill (J) = Fill Required plus (+) Material for Backfill of Demolition of Pavement Areas in Fill (for heights of fill < 3 feet below subgrade)

Total Reg. Excav. (M) = C + D + E + F + K

Total Fill (N) = J + E + G + H + L + R

Borrow (S) = [N - ([C + F + K + P + Q - D - I] x Compaction Factor)] ÷ Compaction Factor for Borrow Site

(Embankment) (S) = N - (C + F + K + P + Q - D - I) (Embankment = Total Fill - Usable Cut) Estimated Material to be obtained off-site.

(1) Cut quantity shown does not include the material removed as Demolition of Pavement.

(2) Quantity shown for use in Grading Diagram only. See other Summaries for pay item(s).

(3) Included in Totat Regular Excavation

(4) Included in Roadway Cut quantity.

(5) Quantities for Temporary Sediment Basins and Temporary Sediment Traps are included with the Stormwater Management Basin quantities.

(6) Denotes pay item.

(7) Included in total fill quantity.

(8) This quantity comes from the computer listings and/or manual cross-sections and may be adjusted for other quantities.

(9) Volumes obtained for Cut Ditches and Fill Ditches not included in computer listings.

(10) Includes settlement of in-place soil.

(11) Included in the line item for Undercut Excavation (85006)

McCORMICK TAYLOR

REV	DATE	DESCRIPTION	BY

SCALE: 1" = NTS
DRAWN BY DATE
CHECKED BY DATE
DESIGN BY DATE
TAX MAP

RESERVOIR STREET

GRADING DIAGRAM SUMMARY

PUBLIC WORKS DEPARTMENT
CITY OF HARRISONBURG
320 E MOSBY ROAD
HARRISONBURG, VIRGINIA

SHEET 2D(7)

INCIDENTAL SUMMARY

SHEET NO.	CURB STD. CG-2 ⓧ	COMB. CURB AND GUTTER STD. CG-6 ⓧ	ENTRANCE GUTER STD. CG-9B ⓧ	ENTRANCE GUTER STD. CG-9D ⓧ	ENTRANCE GUTER STD. CG-13	HYD. CEMENT CONCRETE SIDEWALK 4 IN. ⓧ	HYD. CEMENT CONCRETE SIDEWALK 7 IN. ⓧ STD.	CG-12 DETECTABLE WARNING SURFACE ⓧ	FLEXIBLE PAVEMENT PLANING ⓧ	DEMOLITION OF PAVEMENT ⓧ	AGGR. BASE MATL. TYPE I, 21B (UNDER SIDEWALK)	MAILBOX POST	NS FE-CL (SPLIT RAIL FENCE)	SAW CUT ASPHALT PVMT. FULL DEPTH	HANDRAIL HR-1 TYPE II	NS STREET CENTER-LINE MONUMENTS	MEDIAN STRIP STD. MS-2	MEDIAN STRIP STD. MS-1A	RW-2
	L.F.	L.F.	S.Y.	S.Y.		S.Y.	S.Y.	S.Y.	S.Y.	S.Y.	TON	L.F.	L.F.	L.F.	EA.	EA.	L.F.	S.Y.	CY
3	232	543	-	70	-	280	49	6	0	1147	128	4	-	-	-	2	108	11	-
4	647	1400	-	147	-	671	101	10	108	2630	293	9	-	-	-	1	326	110	12
5	599	1942	45	18	-	866	210	16	2129	1728	439	6	-	1531	-	1	368	115	-
6	706	1410	-	71	-	716	45	7	1074	1389	314	4	-	475	68	2	258	102	-
7	821	1455	32	93	-	703	73	10	801	2523	318	6	-	273	439	2	409	74	-
8	394	1688	-	56	-	556	229	14	123	4168	299	3	-	73	97	3	197	135	-
9	225	2175	-	-	10	755	247	42	5209	1751	398	7	-	1805	-	3	36	120	-
9B	-	1129	-	35	-	465	127	25	3126	272	228	6	-	1204	-	3	-	-	-
9C	-	379	-	-	33	253	77	12	857	98	126	3	230	450	-	1	-	-	-
10	142	1652	-	-	-	494	174	21	2769	287	235	7	72	1200	131	-	-	6	-
11	81	1290	-	21	-	454	164	16	3753	301	229	3	-	1403		3	-	36	-
11B	100	913	-	-	-	518	121	21	3331	336	250	3	-	1387	-	1	-	-	-
11C	321	575	-	-	-	70	56	9	1224	249	47	3	-	531	-	1	-	-	-
TOTAL	4268	16551	77	511	43	6801	1673	209	24504	16879	3304	64	302	10332	735	23	1702	709	12

INCIDENTAL SUMMARY CONT'D.

	MAINTENANCE OF TRAFFIC									PORTABLE CHANGEABLE MESSAGE SIGN	TRAFFIC BARRIER SERVICE
	CONST. PVMT MARKING TYPE D 4 IN.	CONST. PVMT MARKING TYPE F 4 IN.	FLAGGER SERVICE	CONST. SIGNS	TYPE III BARRICADE 8'	CRUSHER RUN AGGREGATE NO. 25 OR 26	ALLAYING DUST	ELECTRONIC ARROW	GROUP 2 CHANNELIZING DEVICE		
	L.F.	L.F.	HOUR	S.F.	E.A.	TON	HOUR	HOUR	DAY	HOUR	E.A.
TOTAL	9125	27375	640	293	6	1000	1200	5000	127600	17520	475

McCORMICK TAYLOR

REV	DATE	DESCRIPTION	BY

SCALE: 1" = NTS
DRAWN BY DATE
CHECKED BY DATE
DESIGN BY DATE
TAX MAP

RESERVOIR STREET

INCIDENTAL SUMMARY

PUBLIC WORKS DEPARTMENT
CITY OF HARRISONBURG
320 E MOSBY ROAD
HARRISONBURG, VIRGINIA

SHEET 2D(8)

RETAINING WALL "E"

DESIGN FEATURES RELATING TO CONSTRUCTION OR TO REGULATION AND CONTROL OF TRAFFIC MAY BE SUBJECT TO CHANGE AS DEEMED NECESSARY BY THE DEPARTMENT

REVISED	STATE	STATE ROUTE	STATE PROJECT	SHEET NO.
	VA.	710	VDOT* U000-115-R30 UPC* 101219	2E(1)

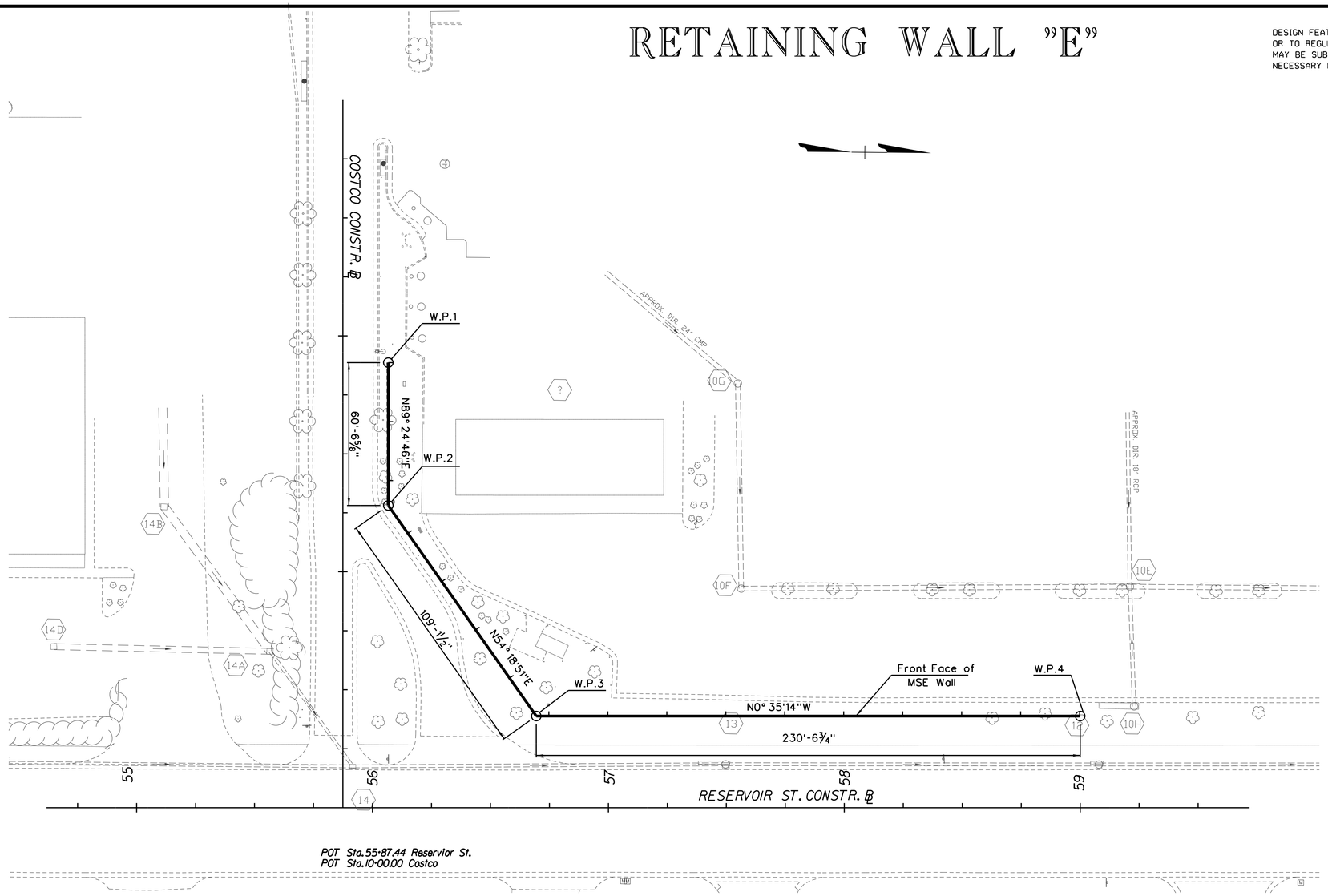

LEGEND

W.P. - Working Point

STAKE - OUT PLAN

NOT TO SCALE

RETAINING WALL "E" GENERAL NOTES

- Design loads: Live load surcharge of 2.0'
  Earth surcharge to account for 3" of future asphalt overlay.
- Specifications (Refer to latest versions):
  Construction: Virginia Department of Transportation, Road and Bridge Specifications, 2007 with current revisions.
  Design: AASHTO LRFD Bridge Design Specifications. 6th Edition, 2013 & VDOT Modifications.
  Standards: Virginia Department of Transportation Road and Bridge Standards, 2008.
- These plans are incomplete unless accompanied by the Supplemental Specifications and Special Provisions included in the contract documents.
- The minimum design life of MSE wall shall be 75 years.
- Construct barriers and moment slabs using VDOT Class A4 cement concrete. Construct leveling pads using VDOT Class A3 cement concrete. Chamfer exposed edges ¾ in. by ¾ in. Rake finishe all horizontal construction joints.
- All reinforcing steel shall be deformed and shall conform to ASTM A615. Grade 60 except for reinforcing steel noted as CRR (corrosion resistant reinforcement) which shall conform to the applicable specifications noted in the special provision.
- Corrosion resistant reinforcing steel shall be used in the precast facing panels, precast coping and moment slab.
- Corrosion resistant reinforcing (CRR) steels shall conform to one or more of the three types (low carbon/chromium, stainless clad or solid stainless) listed in the special provision. The minimum yield strength shall be: 100 Ksi for low carbon/chromium steel and 60 Ksi for stainless clad steel or solid stainless steel.
- Material in the retaining wall select backfill/reinforcement zone shall be specified and compacted per the manufacturer's specifications and VDOT Road and Bridge Specifications.
- Verify all dimensions and geometry in the field as necessary for proper fit of the proposed construction. Coordinate with inspector.
- A higher strength of concrete may be substituted for a lower strength of concrete at no additional cost to the City.
- Galvanize all soil stabilizing elements, and hardware in accordance with the manufacturer's specification and VDOT Road and Bridge Specifications.
- Minimum precast panel design thickness is 5.5 inches. Vertical joints shall be placed in the wall at intervals not to exceed 90 feet.
- An impervious membrane shall be placed below the pavement and just above the first row of reinforcement to intercept any flows containing deicing chemicals.
- The membrane shall be sloped to drain away from the facing to an intercepting longitudinal drain outletted beyond the reinforced zone. The cost of the impervious membrane shall be included in the price bid for other items.
- A geotextile shall be used as a separator between the mechanically stabilized earth mass and the subbase.
- Barrier and moment slab shall not be placed until 14 days after wall completion. The contractor shall use a Category A retaining wall system manufacturer listed on the approved retaining wall systems list published by VDOT. The wall system shall be capable of meeting all requirements for the project documents, including but not limited to geotechnical/subsurface conditions, settlement limits, utility coordination, including storm drainage, panel design, and railing installation.
- The contractor shall notify the geotechnical engineer if excavation reveals disturbed, unsuitable, or unstable foundation material. If unsuitable or unstable soils are encountered in the proposed foundation zone, undercut excavation will be required. Remove unsuitable or unstable foundation material below the bottom of the wall based on the geotechnical engineer's recommendation. After removing unsuitable or unstable foundation material below the bottom of the wall, compact the foundation area according to the VDOT specifications.
- The selected wall supplier will submit a detailed design including calculations and shop drawings for approval. A complete reinforcing steel schedule shall be included in the shop drawings. This submittal shall be sealed by a professional engineer registered in the Commonwealth of Virginia.
- All panel types and other related elements shall be detailed on shop drawings.
- Contractor is responsible for obtaining data and verifying bearing pressure of existing soil. Results shall be provided to Engineer and Inspector prior to foundation construction.
- Bond breaker shall be used between the proposed sidewalk and moment slab. The price for this item shall be included in the price bid for other items.

STAKE-OUT PLAN WORK POINTS

NUMBER	WALL STATION	ROADWAY STATION	ROADWAY OFFSET	ROAD ALIGNMENT	Y (NORTHING)	X (EASTING)
1	10+00.00	11+88.67	19.25	COSTCO	6838781.77	11380903.68
2	10+60.55	11+28.12	19.25	COSCTO	6838782.39	11380964.23
3	11+69.68	56+69.44	38.83	RESERVOIR	6838846.05	11381052.86
4	14+00.24	59+00.00	38.83	RESERVOIR	6839076.60	11381050.50

* - THREE PLACE COORDINATES ARE FOR COMPUTATIONAL PURPOSES ONLY AND DO NOT IMPLY A PRECISION BEYOND TWO DECIMAL PLACES.
** - STATIONS & OFFSETS ARE IN FEET UNLESS NOTED OTHERWISE.

APPROXIMATE QUANTITIES - MECHANICALLY STABILIZED RETAINING WALL E

ITEM	UNIT	TOTAL
MSE WALL PANELS	SF	3554
CLASS A3 CONCRETE (LEVELING PAD)	CY	8
CLASS A4 CONCRETE (MOMENT SLAB & BARRIER)	CY	116
MOMENT SLAB REINFORCING	LB	14866
BR27D-8 RAILING	LF	271
HR-1 TYPE II RAILING	LF	130
GEOTEXTILE	SY	950
SELECT GRANULAR MATERIAL	TON	2581
NO. 68 AGGREGATE	CY	20
EXCAVATION	CY	1613

SCALE	PROJECT	SHEET NO.
0 25' 50'	UPC* 101219	2E(1)

TYPICAL SECTIONS - RETAINING WALL "E"

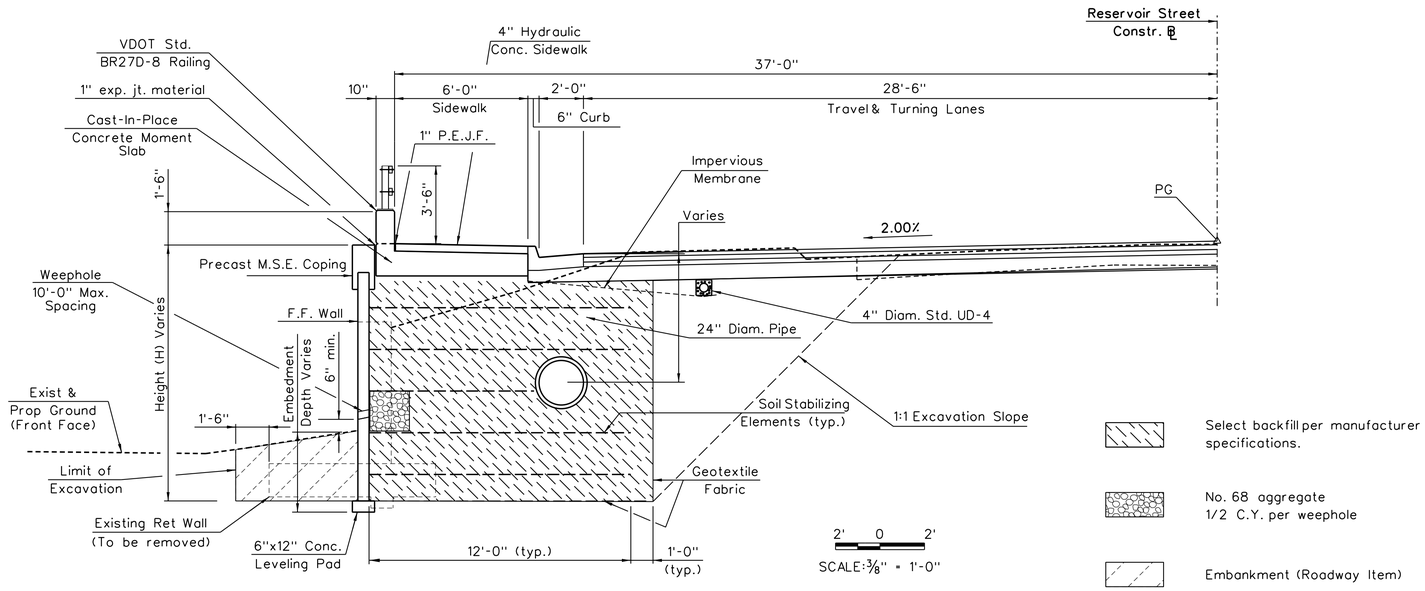

TYPICAL MSE WALL SECTION WITH SIDEWALK & BARRIER - RESERVOIR STREET

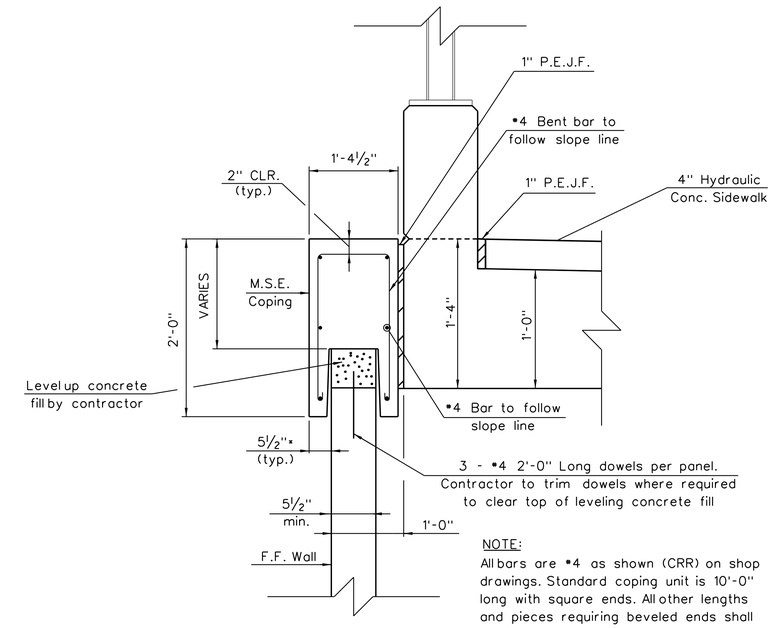

NOTE:
All bars are #4 as shown (CRR) on shop drawings. Standard coping unit is 10'-0" long with square ends. All other lengths and pieces requiring beveled ends shall be field cut by the contractor.

PRECAST COPING DETAIL

NOT TO SCALE
* - 5½" IF PRECAST PANEL DESIGN THICKNESS IS 5½"

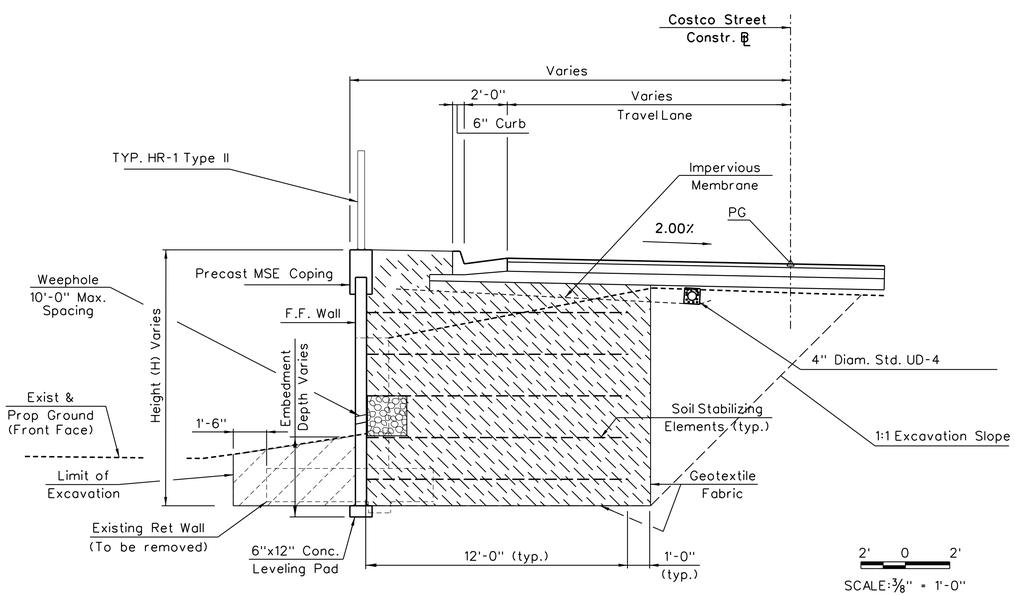

TYPICAL MSE WALL SECTION WITH HANDRAIL - COSTCO ENTRANCE

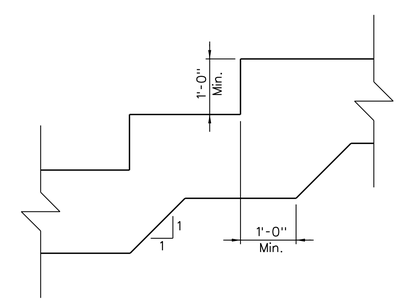

TYP. LEVELING PAD STEP DETAIL

NOT TO SCALE

REV	DATE	DESCRIPTION	BY

McCORMICK TAYLOR

SCALE: 1" = NTS
DRAWN BY | DATE
CHECKED BY | DATE
DESIGN BY | DATE
TAX MAP

RESERVOIR STREET
WALL "E" TYPICALS
PUBLIC WORKS DEPARTMENT
CITY OF HARRISONBURG
320 E MOSBY ROAD
HARRISONBURG, VIRGINIA

SHEET
2E(2)

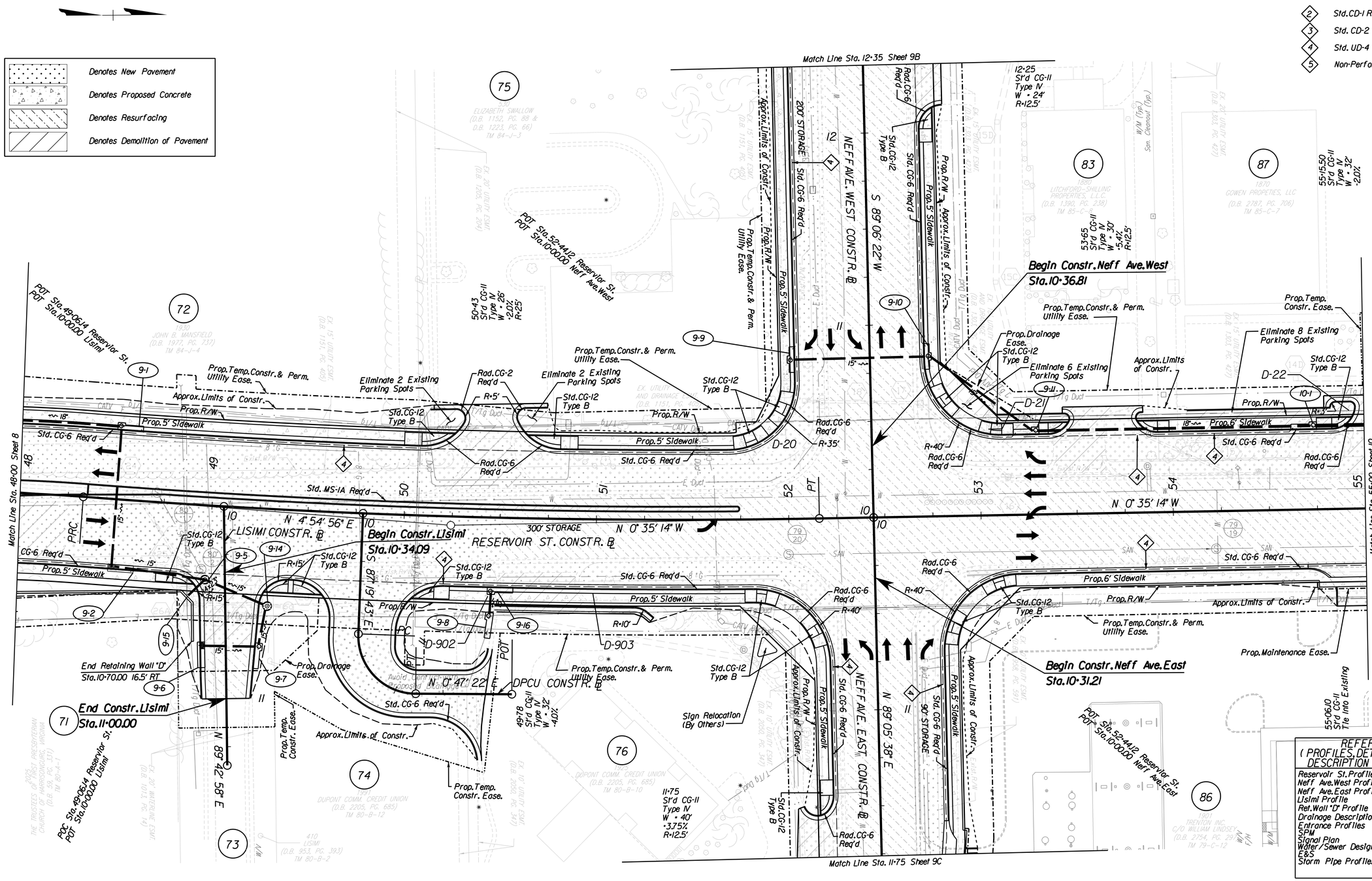
Denotes New Pavement
Denotes Proposed Concrete
Denotes Resurfacing
Denotes Demolition of Pavement
LEGEND
Std.CD-1 Req'd.
Std. CD-2 Req'd.
Std. UD-4 Req'd.
Non-Perforated Outlet Pipe
Match Line Sta. 12+35 Sheet 9B
Match Line Sta. 48+00 Sheet 8
Match Line Sta. 55+00 Sheet 10
Match Line Sta. 11+75 Sheet 9C
NEFF AVE. WEST CONSTR. ℄
S 89° 06' 22" W
N 0° 35' 14" W
N 4° 54' 56" E
LISIMI CONSTR. ℄
RESERVOIR ST. CONSTR. ℄
N 89° 43' 19" E
N 0° 47' 22" E
DPCU CONSTR. ℄
N 89° 42' 58" E
NEFF AVE. EAST CONSTR. ℄
N 89° 05' 38" E
Begin Constr. Lisimi
Sta. 10+34.09
End Constr. Lisimi
Sta. 11+00.00
Begin Constr. Neff Ave. West
Sta. 10+36.81
Begin Constr. Neff Ave. East
Sta. 10+31.21
End Retaining Wall "D"
Sta. 10+70.00 16.5' RT
POT Sta. 52+44.12 Reservior St.
POT Sta. 10+00.00 Neff Ave. West
POT Sta. 49+06.14 Reservior St.
POT Sta. 10+00.00 Lisimi
POT Sta. 52+44.12 Reservior St.
POT Sta. 10+00.00 Neff Ave. East
POC Sta. 49+06.14 Reservior St.
POT Sta. 10+00.00 Lisimi
200' STORAGE
300' STORAGE
90' STORAGE
Approx. Limits of Constr.
Prop. Temp. Constr. & Perm. Utility Ease.
Prop. Temp. Constr. Ease.
Prop. Drainage Ease.
Prop. Maintenance Ease.
Prop. 5' Sidewalk
Prop. 6' Sidewalk
Prop. R/W
Std. CG-6 Req'd
Rad. CG-6 Req'd
Std. CG-12 Type B
Eliminate 2 Existing Parking Spots
Eliminate 6 Existing Parking Spots
Eliminate 8 Existing Parking Spots
Sign Relocation (By Others)
Tie into Existing
D-20
D-21
D-22
D-902
D-903
Avoid Conflict with Proposed Drainage
12+25 St'd CG-11 Type IV W = 24' R=12.5'
53+65 St'd CG-11 Type IV W = 30' -5.4% R=12.5'
55+15.50 St'd CG-11 Type IV W = 32' -2.0%
50+43 St'd CG-11 Type IV W = 26' -2.0% R=25'
48+94 St'd CG-11 Type IV W = 32' -4.0%
11+75 St'd CG-11 Type IV W = 40' -3.75% R=12.5'
55+06.10 St'd CG-11 Tie into Existing
ELIZABETH SWALLOW (D.B. 1152, PG. 88 & D.B. 1223, PG. 66) TM 84-J-3
JOHN B. MANSFIELD (D.B. 1977, PG. 737) TM 84-J-4
LITCHFORD-SHILLING PROPERTIES, LLC (D.B. 1390, PG. 238) TM 85-C-8
GOWEN PROPERTIES, LLC (D.B. 2787, PG. 706) TM 85-C-7
THE TRUSTEES OF THE CHURCH HARRISONBURG PRESBYTERIAN (D.B. 1013, PG. 531) TM 85-A-1
DUPONT COMM. CREDIT UNION (D.B. 2205, PG. 685) TM 80-B-10
DUPONT COMM. CREDIT UNION (D.B. 2205, PG. 685) TM 80-B-12
LISIMI (D.B. 953, PG. 393) TM 80-B-2
TRENTON, INC. C/O WILLIAM LINDSEY (D.B. 2754, PG. 28) TM 79-C-12
REFERENCES (PROFILES, DETAIL & DRAINAGE DESCRIPTION SHEETS, ETC.)
Reservoir St. Profile 9A
Neff Ave. West Profile 9D
Neff Ave. East Profile 9E
Lisimi Profile 9A
Ret. Wall "D" Profile 9A
Drainage Descriptions 2B Series
Entrance Profiles 14 Series
SPM 12 Series
Signal Plan 13 Series
Water/Sewer Design 15/16 Series
E&S 17 - 18 Series
Storm Pipe Profiles 20 Series
McCORMICK TAYLOR
REV DATE DESCRIPTION BY
SCALE: 1" = 25'
DRAWN BY DATE
CMY
CHECKED BY DATE
RJD
DESIGN BY DATE
CMY
TAX MAP
RESERVOIR STREET
PLAN
STA. 48+00-55+00
PUBLIC WORKS DEPARTMENT
CITY OF HARRISONBURG
320 E MOSBY ROAD
HARRISONBURG, VIRGINIA
SHEET
9

SWM BMP PROFILE AND CROSS SECTION

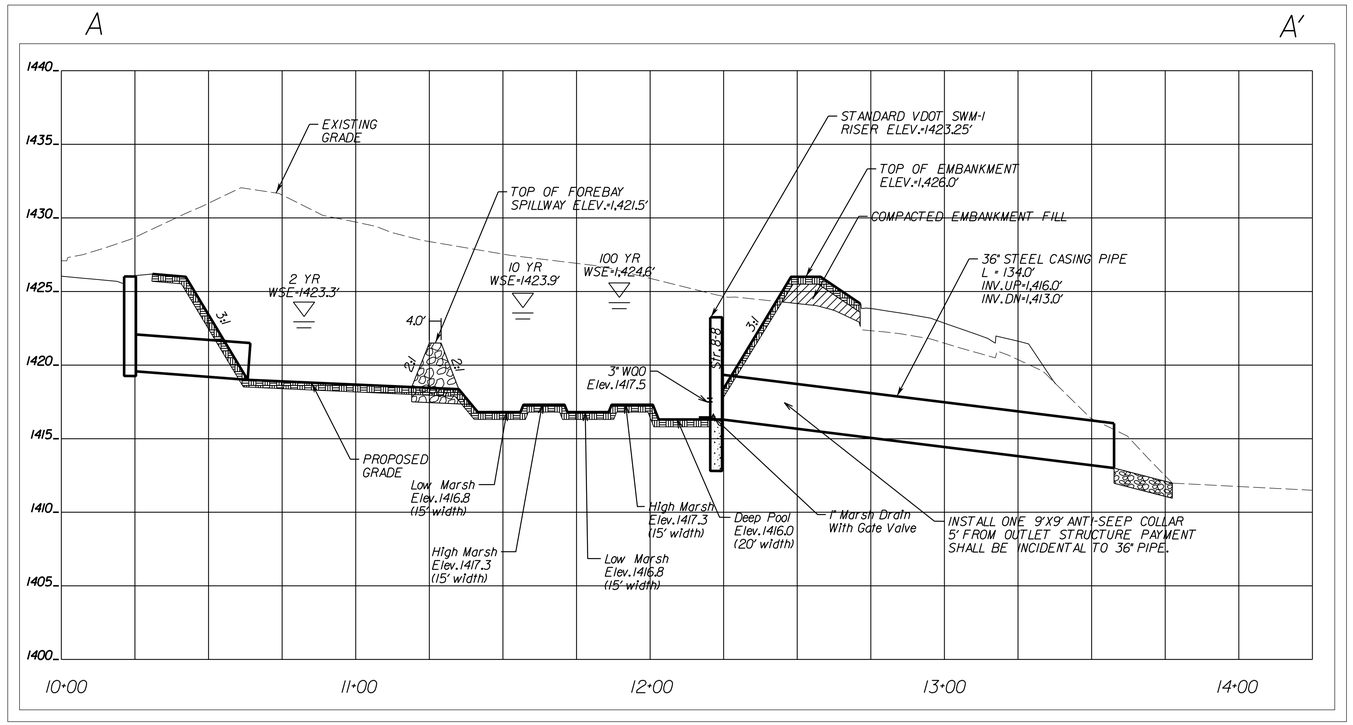

CROSS SECTION A-A'

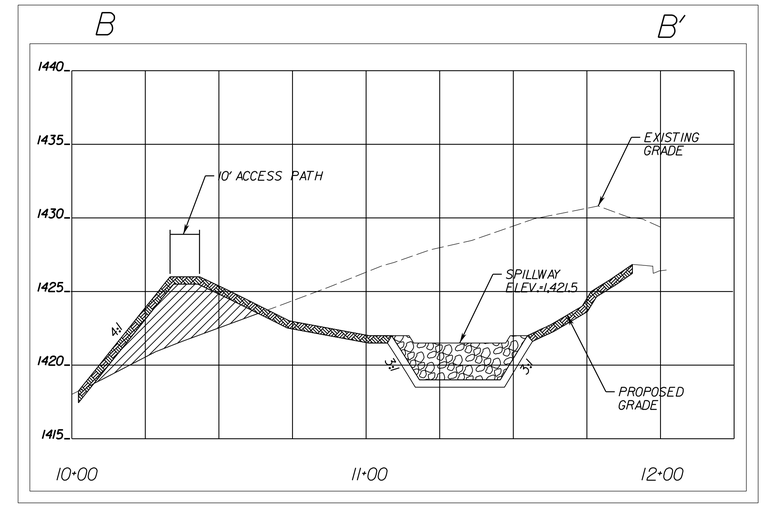

CROSS SECTION B-B'

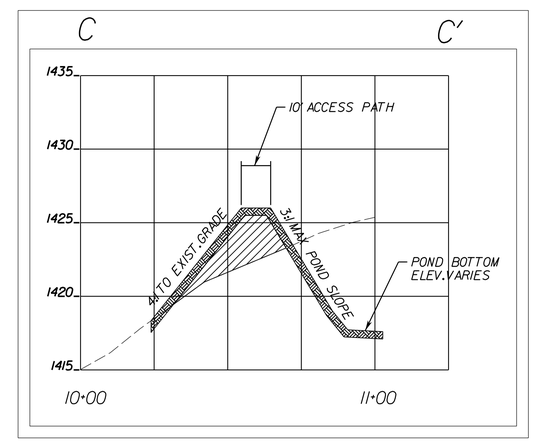

CROSS SECTION C-C'

LEGEND

- TOPSOIL DRESSING
- LOW PERMEABILITY LINER/FILL
- CONCRETE CRADLE
- CLASS I RIPRAP
- CLASS A-3 CONCRETE

VERTICAL SCALE: 0, 5', 10'

HORIZONTAL SCALE: 0, 25', 50'

REFERENCES (PROFILES, DETAIL & DRAINAGE DESCRIPTION SHEETS, ETC.)	
Layout / Grading	19(1)
Structure / Pond Details	19(3)
Drainage Descriptions	2B

McCORMICK TAYLOR

REV	DATE	DESCRIPTION	BY

SCALE: 1" = 25'

DRAWN BY | DATE

CHECKED BY | DATE

DESIGN BY | DATE

TAX MAP

RESERVOIR STREET

BMP Profile

PUBLIC WORKS DEPARTMENT
CITY OF HARRISONBURG
320 E. MOSBY ROAD
HARRISONBURG, VIRGINIA

SHEET 19(2)