HARRISONBURG WASTE TRANSFER STATION

2055 BERRY ROAD
CENTRAL MAGISTERIAL DISTRICT
HARRISONBURG, VIRGINIA

STANDARD PROJECT LEGEND:

- COMM — PROPOSED COMMUNICATIONS LINE
- ELEC OH — PROPOSED OVERHEAD POWER
- ELEC UG — PROPOSED UNDERGROUND POWER
- FO — PROPOSED FIBER OPTIC LINE
- GAS — PROPOSED GAS LINE
- GEOTHERMAL — PROPOSED GEOTHERMAL LINE
- SS — PROPOSED SEWER LINE
- SS FM — PROPOSED FORCE MAIN
- STEAM — PROPOSED STEAM LINE
- TELE OH — PROPOSED OVERHEAD TELEPHONE
- TELE UG — PROPOSED UNDERGROUND TELEPHONE
- W — PROPOSED WATER LINE
- EXISTING STORM SEWER
- PROPOSED STORM SEWER
- EXISTING WATER GATE VALVE
- PROPOSED WATER GATE VALVE
- AR — AIR RELEASE VALVE
- EXISTING FIRE HYDRANT
- PROPOSED FIRE HYDRANT
- WATER METER
- TEE
- WATER MAIN CROSS
- WATER MAIN REDUCER
- WATER MAIN PLUG
- EXISTING SANITARY MANHOLE
- PROPOSED SANITARY MANHOLE
- SANITARY SEWER CLEANOUT
- COMM — COMMUNICATION PULLBOX
- COMM — COMMUNICATIONS MANHOLE/HANDHOLE
- ELEC — ELECTRICAL POWER MANHOLE/HANDHOLE
- SITE LIGHTING
- UTILITY POLE
- POST
- 1400 — EXISTING CONTOURS
- 1400 — PROPOSED CONTOURS
- EXISTING CURB & GUTTER
- PROPOSED CURB & GUTTER
- REVERSE CURB & GUTTER
- REVERSE CURB & GUTTER TRANSITION
- EXISTING FENCE/GUARDRAIL
- PROPOSED FENCE/GUARDRAIL
- SIGN
- STEAM LINE GRATE
- BENCHMARK

NOTE:

1. ANY SYMBOL NOT CALLED OUT IN LEGEND WILL BE LABELED ON PLAN.
2. NOT ALL SYMBOLS IN LEGEND APPLY TO THIS PLAN.
3. AN 'X' IN FRONT OF ANY UTILITY LINE TYPE INDICATES EXISTING.
4. NUMBERS ON A UTILITY LINE INDICATES LINE SIZE.

RESPONSIBLE LAND DISTURBER:

NAME: _____

CERT #: _____

EXPIRATION: _____

ABBREVIATIONS:

B/W	BOTTOM OF WALL
BFF	BASEMENT FINISH FLOOR
BM	BENCHMARK
C-C	CENTER TO CENTER
CG	CURB & GUTTER
CL	CENTER LINE
CMP	CORRUGATED METAL PIPE
CO	CLEAN OUT
CONC	CONCRETE
DI	DUCTILE IRON PIPE
Δ	DELTA
ESMT	EASEMENT
EP	EDGE OF PAVEMENT
ELEV	ELEVATION
EW	ENDWALL
EX	EXISTING
FCR	FOOT CANDLE RADIUS
FDC	FIRE DEPARTMENT CONNECTION
FES	FLARED END SECTION
FF	FINISH FLOOR
FH	FIRE HYDRANT
FM	FORCE MAIN
H	HEIGHT
HDPE	HIGH-DENSITY POLYETHYLENE
INV	INVERT
L	LENGTH
LF	LINEAR FEET
MH	MANHOLE
NTS	NOT TO SCALE
N/F	NOW OR FORMERLY
O-C	ON CENTER
PC	POINT OF CURVATURE
PCC	POINT OF COMPOUND CURVATURE
PI	POINT OF INTERSECTION
PL	PROPERTY LINE
PRC	POINT OF REVERSE CURVE
PROP	PROPOSED
PT	POINT OF TANGENCY
PVC	POINT OF VERTICAL CURVATURE
PVI	POINT OF VERTICAL INTERSECTION
PVMT	PAVEMENT
PVT	POINT OF VERTICAL TANGENT
R	RADIUS
R/W	RIGHT-OF-WAY
RCP	REINFORCED CONCRETE PIPE
RD	ROOF DRAIN
ROW	RIGHT-OF-WAY
S/S	SPOT SHOT
SCH	SCHEDULE
SEW	SANITARY SEWER
SS	SANITARY SEWER
STA	STATION
STD	STANDARD
STR	STRUCTURE
SWM	STORMWATER MANAGEMENT
TBM	TEMPORARY BENCH MARK
TYP	TYPICAL
T/C	TOP OF CURB
T/G	TOP OF GRADE / SIDEWALK
T/P	TOP OF PAVEMENT
T/W	TOP OF WALL
WM	WATER MAIN
W/	WITH

va811.com Dig With CARE

CALL MISS UTILITY PRIOR TO EXCAVATION 811 OR 1.800.552.7001

SUBCONTRACTORS MAY NOT WORK UNDER ANOTHER COMPANY'S TICKET UNLESS THEY ARE UNDER THE DIRECT SUPERVISION OF THE COMPANY THAT PROVIDED THE NOTICE OF EXCAVATION. ALLOW REQUIRED TIME FOR MARKING AND BEGIN EXCAVATION ONLY AFTER CHECKING THE POSITIVE RESPONSE SYSTEM. EXCAVATION MAY BEGIN WHEN: ALL NOTIFIED UTILITIES HAVE EITHER MARKED THEIR LINES OR REPORTED THAT THEY HAVE NO FACILITIES IN THE AREA OF EXCAVATION OR THE MARKING PERIOD HAS EXPIRED (AFTER 7:00 AM ON THE THIRD WORKING DAY AFTER NOTICE TO THE CENTER.) OR MISS UTILITY INFORMS YOU THAT NO MEMBER OPERATORS NEED TO BE NOTIFIED OF THE EXCAVATION. YOU WILL STILL GET A TICKET NUMBER! RESPECT THE MARKS - PROTECT AND PRESERVE THE MARKINGS FROM THE TIME EXCAVATION BEGINS UNTIL THE WORK IS COMPLETED. CALL MISS UTILITY TO UPDATE THE TICKET IF WORK WILL CONTINUE PAST 15 DAYS OR IF THE MARKS BECOME ILLEGIBLE DUE TO TIME, WEATHER, CONSTRUCTION OR ANY OTHER CAUSE. EXCAVATE CAREFULLY - IF THE EXCAVATION IS WITHIN 2 FEET OF A MARKED UTILITY LINE, EXPOSE THE UTILITY LINE BY HAND DIGGING AND KEEP ALL MECHANIZED EQUIPMENT AT LEAST 2 FEET AWAY FROM THE EXTREMITIES OF THE UTILITY.

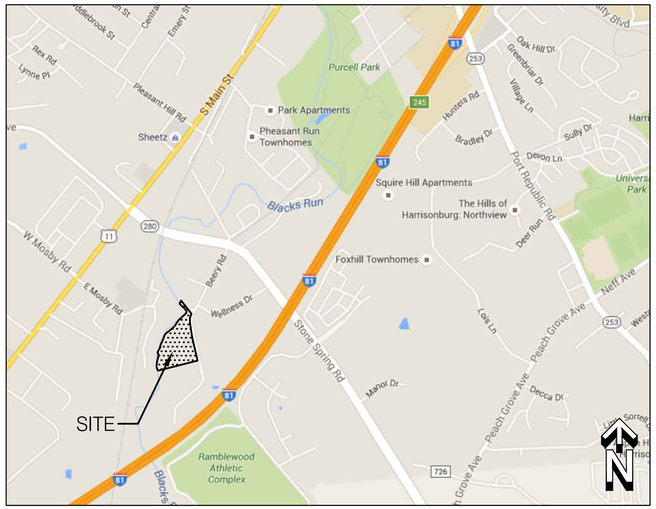

VICINITY MAP
1" = 2000'

PROJECT DIRECTORY

PLANNING & COMMUNITY DEVELOPMENT DIRECTOR
ADAM FLETCHER
409 S. MAIN STREET
HARRISONBURG, VA 22801
(540) 432-7700

CITY ENGINEER
DANIEL RUBLEE, PE
409 S. MAIN STREET
HARRISONBURG, VA 22801
(540) 432-7700

EROSION & SEDIMENT CONTROL ADMINISTRATOR
RAY BAILEY, PE
409 S. MAIN STREET
HARRISONBURG, VA 22801
(540) 432-7700

PUBLIC WORKS DIRECTOR
JAMES BAKER
320 E. MOSBY ROAD
HARRISONBURG, VA 22801
(540) 434-5928

PUBLIC UTILITIES DIRECTOR
MIKE COLLINS
2155 BEERY ROAD
HARRISONBURG, VA 22801
(540) 434-9959

FIRE CHIEF
LARRY SHIFFLET
101 N. MAIN STREET
HARRISONBURG, VA 22801
(540) 432-7703

BUILDING OFFICIAL
RON SHUETT
409 S. MAIN STREET
HARRISONBURG, VA 22801
(540) 432-7700

CHIEF CONSTRUCTION INSPECTOR
DOUG ADAMS
409 S. MAIN STREET
HARRISONBURG, VA 22801
(540) 432-7700

PLANS PREPARED BY:

VALLEY ENGINEERING
CONTACT: DANIEL K. MICHAEL, P.E.
3231 PEOPLES DRIVE
HARRISONBURG, VIRGINIA 22801
TELEPHONE (540) 434-6365 OR (800) 343-6365
FAX (540) 432-0685
www.valleyesp.com

OWNER/DEVELOPER:

CITY OF HARRISONBURG
DEPARTMENT OF PUBLIC WORKS
CONTACT: TOM HARTMAN, P.E.
320 EAST MOSBY ROAD
HARRISONBURG, VIRGINIA 22801
TELEPHONE (540) 434-9959
FAX (540) 434-9769

SHEET INDEX

PAGE	DESCRIPTION
C0.01	TITLE SHEET
C1.01	GENERAL NOTES
C2.01	EXISTING CONDITIONS, DEMOLITION PLAN, & SOILS INFORMATION
C3.01	EROSION & SEDIMENT CONTROL NOTES
C3.02	EROSION & SEDIMENT CONTROL PLAN
C3.03	EROSION & SEDIMENT CONTROL DETAILS
C3.04	STORMWATER MANAGEMENT PLAN
C4.01	SITE PLAN
C4.02	LANDSCAPE PLAN
C6.01	GRADING PLAN
C7.01	DETAILS
C7.02	DETAILS

CITY OF HARRISONBURG
SOLID WASTE TRANSFER STATION
2055 BERRY ROAD
HARRISONBURG, VA

VALLEY | ENGINEERING
IDEAS MADE REAL
3231 PEOPLES DRIVE
HARRISONBURG, VIRGINIA 22801
TELEPHONE (540) 434-6365 OR (800) 343-6365
FAX (540) 432-0685
www.valleyesp.com

COPYRIGHT HELD BY VALLEY ENGINEERING, P.C. ALL RIGHTS RESERVED. THIS DRAWING MAY NOT BE REPRODUCED IN WHOLE OR IN PART WITHOUT WRITTEN PERMISSION OF VALLEY ENGINEERING, P.C.

COMMONWEALTH OF VIRGINIA
DANIEL K. MICHAEL
Lic. No. 028947
PROFESSIONAL ENGINEER
10-11-16

BID SET

REVISIONS:
08/17/2016 - CITY COMMENTS
10/04/2016 - PER CITY COMMENTS

DATE: 7/13/2016

PROJECT No.: 10921-2

EXP./CLIENT No.: 10921-2

SCALE: TBLKSCALE

TITLE SHEET

SHEET NO.:
C0.01

GENERAL NOTES (ALL MAY NOT APPLY):

1. ALL AREAS NOT BUILT OR PAVED UPON SHALL BE LANDSCAPED.

2. THE LOCATIONS, SIZE, AND TYPES OF EXISTING UTILITIES ARE SHOWN BASED UPON READILY AVAILABLE INFORMATION AND ARE SHOWN AS AN APPROXIMATE REPRESENTATION ONLY. THE ENGINEER, OWNER, OR ANY OTHER REPRESENTATIVE HAVE NOT INDEPENDENTLY, OR JOINTLY, VERIFIED THIS INFORMATION AS SHOWN ON THE PLANS. THE UTILITY INFORMATION SHOWN DOES NOT GUARANTEE THE ACTUAL EXISTENCE, SERVICEABILITY, OR OTHER DATA CONCERNING THE UTILITIES. NOR DOES IT GUARANTEE AGAINST THE POSSIBILITY THAT ADDITIONAL UTILITIES MAY BE PRESENT THAT ARE NOT SHOWN ON THE PLANS. PRIOR TO ORDERING MATERIALS AND BEGINNING CONSTRUCTION, THE CONTRACTOR SHALL VERIFY THE DETERMINE THE EXACT LOCATIONS, SIZES, AND ELEVATIONS OF THE POINT OF CONNECTIONS TO EXISTING UTILITIES AND SHALL CONFIRM THAT THERE ARE NO INTERFERENCES WITH EXISTING UTILITIES AND THE PROPOSED UTILITY ROUTES, INCLUDING ROUTES WITHIN ANY PUBLIC RIGHT-OF-WAY.

3. WHERE AND EXISTING UTILITY IS FOUND TO CONFLICT WITH THE PROPOSED WORK, OR EXISTING CONDITIONS DIFFER FROM THE FROM THOSE SHOWN SUCH THAT THE WORK CANNOT BE COMPLETED AS INTENDED, THE CONTRACTOR SHALL, WITHOUT DELAY, ACCURATELY DETERMINE THE LOCATION, ELEVATION, AND SIZE OF THE UTILITY. THIS INFORMATION SHALL BE PROVIDED, IN WRITING, TO THE OWNER'S REPRESENTATIVE TO DETERMINE CORRECTIVE MEASURES. ANY WORK COMPLETED BY THE CONTRACTOR PRIOR TO THIS RESOLUTION WILL RESULT IN ANY CLAIM BY THE CONTRACTOR NOT BEING CONSIDERED.

4. THE TOP ELEVATION OF ANY STRUCTURE, MANHOLE, BASIN, VALVE, OR ANY OTHER FIXTURE IS APPROXIMATE AND THE FINAL ELEVATION SHALL BE BASED UPON ON FOLLOWING:
   (1. PAVEMENTS AND CONCRETE SURFACES: FLUSH
   (2. ALL SURFACES ALONG ACCESSIBLE ROUTES: FLUSH
   (3. LANDSCAPE, SOIL AND SEED, AND OTHER EARTHEN MATERIAL: ONE INCH ABOVE SURROUNDING AREA AND TAPER TO FIXED OBJECT.

5. CONTRACTOR SHALL REFER TO THE ARCHITECTURAL PLANS FOR EXACT BUILDING DIMENSIONS AND POINTS OF ENTRY INTO THE BUILDING FOR ALL UTILITIES.

6. CONTRACTOR SHALL MAKE ARRANGEMENTS FOR THE ALTERATION AND ADJUSTMENT OF GAS, ELECTRIC, TELEPHONE, FIRE ALARM, AND ANY OTHER PRIVATE UTILITIES, WHETHER WORK WAS COMPLETED BY CONTRACTOR OR OTHER ENTITY, TO ENSURE COMPATIBILITY WITH FINISHED GRADES.

7. CONTRACTOR SHALL COORDINATE WITH ELECTRICAL CONTRACTOR AND SHALL FURNISH EXCAVATION, INSTALLATION, AND BACKFILL OF FINISHED SITEWORK RELATED TO ITEMS SUCH AS PULL BOXES, CONDUITS, DUCT BANKS, LIGHT POLE BASES, AND CONCRETE PADS. CONTRACTOR TO FURNISH CONCRETE ENCASEMENT OF DUCT BANKS IF REQUIRED BY THE UTILITY COMPANY AND AS INDICATED ON THE DRAWINGS.

8. A SEPARATE SIGN PERMIT WILL BE REQUIRED FOR ALL SIGNAGE WITHIN THE SUBDIVISION AND IT IS THE RESPONSIBILITY OF THE OWNER TO OBTAIN THIS DOCUMENT.

9. ANY DUMPSTER PADS SHALL BE SCREENED IN ACCORDANCE WITH THE APPLICABLE CITY, TOWN, & COUNTY REGULATIONS.

10. ALL DIMENSIONS SHOWN ON THESE PLANS ARE TO THE FACE OF THE BUILDING, BACK OF CURB OR THE EDGE OF THE PAVEMENT UNLESS OTHERWISE REFERENCED.

11. WORK ON THIS PROJECT SHALL CONFORM TO THE LATEST EDITIONS OF THE CITY, TOWN, OR COUNTY DESIGN AND CONSTRUCTION STANDARDS MANUAL, THE VIRGINIA DEPARTMENT OF TRANSPORTATION (VDOT) ROAD AND BRIDGE STANDARDS, THE VDOT ROAD AND BRIDGE SPECIFICATIONS, AND THE VIRGINIA EROSION AND SEDIMENT CONTROL HANDBOOK AND REGULATIONS. IN THE EVENT OF CONFLICT BETWEEN ANY OF THESE STANDARDS, SPECIFICATIONS, OR PLANS, THE MOST STRINGENT WILL GOVERN. ALL UTILITIES TO BE DEDICATED TO ANY MUNICIPAL WATER AND/OR SANITARY SEWER SYSTEM SHALL BE CONSTRUCTED AND TESTED TO CONFORM TO THE COMMONWEALTH OF VIRGINIA STATE BOARD OF HEALTH AND THE CITY, TOWN, OR COUNTY DESIGN AND CONSTRUCTION MANUAL.

12. PRIOR TO THE COMMENCEMENT OF ANY WORK ON THIS SITE, THE CONTRACTOR SHALL NOTIFY THE APPROPRIATE AGENCIES AND SHALL INSTALL ALL EROSION CONTROL MEASURES AS SHOWN ON THE APPROVED CONSTRUCTION DOCUMENTS RELATING TO THIS PROJECT.

13. EROSION AND SEDIMENT CONTROL MEASURES SHALL BE MAINTAINED CONTINUOUSLY, RELOCATED WHEN AND AS NECESSARY AND SHALL BE CHECKED AFTER EVERY RAINFALL. SEEDED AREAS SHALL BE CHECKED REGULARLY AND SHALL BE WATERED, FERTILIZED, RESEEDED AND MULCHED AS NECESSARY TO OBTAIN A DENSE STAND OF GRASS.

14. CONTRACTOR SHALL BE RESPONSIBLE FOR THE CONTROL OF THE CONSTRUCTION ACTIVITIES TO ENSURE THAT SEDIMENT SHALL NOT AFFECT REGULATORY PROTECTED AREAS, REGARDLESS IF SEDIMENT TRANSPORT IS BY AIR, WATER, OR ANY OTHER MEANS OF TRANSPORT.

15. CONTRACTOR SHALL SCHEDULE CONSTRUCTION ACTIVITIES SUCH THAT DISTURBED AREAS ARE LEFT UNSTABILIZED FOR A MINIMUM AMOUNT OF TIME BEFORE THEY ARE COVERED, PERMANENTLY OR TEMPORARILY STABILIZED, OR OTHERWISE STABILIZED TO PREVENT EROSION.

16. WHEN THE CRUSHED STONE CONSTRUCTION ENTRANCE HAS BEEN COVERED WITH SOIL OR HAS BEEN PUSHED INTO THE SOIL BY CONSTRUCTION TRAFFIC, IT SHALL BE REPLACED WITH A DEPTH OF STONE EQUAL TO THAT OF THE ORIGINAL APPLICATION.

17. UPON COMPLETION OF CONSTRUCTION ACTIVITIES AND THE ESTABLISHMENT OF APPROPRIATE STABILIZATION, THE CONTRACTOR SHALL REMOVE ALL EROSION CONTROL MEASURES AND PROVIDE ANY ADDITIONAL STABILIZATION MEASURES, AND CLEAN ALL SEDIMENT AND DEBRIS FROM THE SITE AND INSTALLED PIPING.

18. ANY DRAIN INLETS SHALL BE PROTECTED FROM SILTATION. INEFFECTIVE PROTECTION DEVICES SHALL BE REPLACED AND THE INLET CLEANED. FLUSHING IS NOT AN ACCEPTABLE MEANS OF CLEANING.

19. THE LOCATION OF EXISTING UTILITIES AS SHOWN, IS APPROXIMATE ONLY. THE CONTRACTOR IS RESPONSIBLE FOR VERIFYING THE LOCATION, SIZE, AND MATERIAL OF ALL EXISTING UTILITIES PRIOR TO ORDERING ANY NEW MATERIALS REQUIRED FOR UTILITY CONNECTIONS. ANY MATERIALS ORDERED PRIOR TO FIELD VERIFICATION OF EXISTING UTILITIES SHALL BE AT THE CONTRACTORS OWN RISK. THE CONTRACTOR SHALL BE RESPONSIBLE FOR THE REPAIR, AT HIS OR HER EXPENSE, OF ALL EXISTING UTILITIES DAMAGED DURING CONSTRUCTION. FORTY-EIGHT HOURS PRIOR TO ANY EXCAVATION THE CONTRACTOR SHALL CALL MISS UTILITY AT (800)-552-7001.

20. CONTRACTOR SHALL REMOVE AND PROPERTY DISPOSE OF ANY MANMADE FEATURE WITHIN THE LIMITS OF THE WORK INCLUDING, BUT NOT LIMITED TO, BUILDINGS, STRUCTURES, PAVEMENT, SLABS, CUBING, FENCES, UTILITIES, ETC. UNLESS OTHERWISE NOTED ON THE APPROVED DRAWINGS. REMOVAL, AND PROPERLY DISPOSAL, OF EXISTING FEATURES SHALL EXTEND FROM UNDER ANY PROPOSED STRUCTURE A DISTANCE OF 10' BEYOND THE PROPOSED BUILDING FOOTPRINT, OR ANY OTHER BUILDING FEATURE.

21. EXISTING UTILITIES SHALL BE TERMINATED IN ACCORDANCE WITH ANY APPLICABLE REGULATION AND BE COORDINATED WITH THE APPROPRIATE AUTHORITY HAVING JURISDICTION.

22. THE DISPOSAL OF ANY DEMOLITION DEBRIS SHALL BE IN ACCORDANCE WITH ALL APPLICABLE REGULATIONS AND BE LEGALLY COMPLETED IN AN AUTHORIZED DISPOSAL AREA.

23. THE LIMITS OF DEMOLITION SHOWN ON THE PLANS MAY, OR MAY NOT, INCLUDE ALL REQUIRED DEMOLITION. THE CONTRACTOR IS RESPONSIBLE FOR THE ULTIMATE REMOVAL OF ANY FEATURE REQUIRING REMOVAL FOR THIS PROJECT. THE CONTRACTOR IS RESPONSIBLE FOR THE IDENTIFICATION OF EACH AND EVERY ITEM REQUIRING DEMOLITION PRIOR TO PRESENTING A FINAL BID TO THE PROJECT OWNER OR REPRESENTATIVE. NO CLAIMS BY THE CONTRACTOR FOR ADDITIONAL DEMOLITION WORK WILL BE CONSIDERED.

24. UNLESS SPECIFICALLY PROVIDED, THE ENGINEER HAS NOT PREPARED DESIGNS FOR, AND SHALL HAVE NO RESPONSIBILITY FOR, THE PRESENCE, DISCOVERY, REMOVAL, ABATEMENT OR DISPOSAL OF ANY HAZARDOUS MATERIALS, TOXIC WASTE, OR POLLUTANTS AT THE PROJECT SITE. THE ENGINEER AND OWNER SHALL NOT BE RESPONSIBLE FOR ANY CLAIMS OF LOSS, DAMAGE, EXPENSE, DELAY, INJURY, OR DEATH ARISING FROM THE PRESENCE OF HAZARDOUS MATERIALS. IF FOUND, THE CONTRACTOR SHALL INDEMNIFY AND HOLD HARMLESS THE ENGINEER AND OWNER FROM ANY CLAIMS MADE IN CONNECTION WITH ANY SUCH MATERIAL. THE ENGINEER SHALL HAVE NO ADMINISTRATIVE OBLIGATIONS OF ANY TYPE WITH REGARD TO ANY CONTRACTOR AMENDMENT INVOLVING THE ISSUES OF PRESENCE, DISCOVERY, REMOVAL, ABATEMENT OR DISPOSAL OF ASBESTOS OR OTHER HAZARDOUS MATERIAL.

25. ALL UNDERGROUND FACILITIES LOCATED WITHIN ANY RIGHT-OF-WAY SHALL BE INSTALLED PRIOR TO THE PLACEMENT OF ANY PART OF THE PAVEMENT STRUCTURE.

26. INSTALLATION OF CONCRETE STORM PIPE SHALL BE IN CONFORMANCE WITH VDOT STANDARD DRAWING PB-1.

27. ALL MATERIALS USED FOR FILL OR BACK FILL SHALL BE FREE OF WOOD, ROOTS, ROCKS, BOULDERS OR ANY OTHER NON-COMPACTABLE SOIL TYPE MATERIALS. UNSATISFACTORY MATERIALS ALSO INCLUDE MANMADE FILLS AND REFUSE DEBRIS DERIVED FROM ANY SOURCE.

GENERAL NOTES (ALL MAY NOT APPLY) (CONT.):

28. COMPACTION OF FILL MATERIAL UNDER BUILDING SLABS SHALL BE BASED UPON RECOMMENDATIONS OF SOILS ENGINEER AFTER COMPLETION OF STANDARD PROCTOR TEST AND SHALL MEET THE BEARING REQUIREMENTS OF THE STRUCTURAL ENGINEER FOR THE BUILDING. THE CONTRACTOR SHALL BE RESPONSIBLE FOR THE TESTING. TRENCHES OF ANY OTHER DEPRESSION REQUIRING FILL OR BACK FILL SHALL BE COMPACTED TO 95% OF THE MAXIMUM DENSITY AS DETERMINED BY STANDARD PROCTOR TEST AS SET FORTH IN ASTM D-698.

29. MATERIALS USED TO CONSTRUCT EMBANKMENTS FOR ANY PURPOSE, BACK FILL AROUND DRAINAGE STRUCTURES IN UTILITY TRENCHES OR ANY OTHER DEPRESSION REQUIRING FILL OR BACK FILL SHALL BE COMPACTED TO 95% OF MAXIMUM DENSITY AS DETERMINED BY THE STANDARD PROCTOR TEST AS SET FORTH IN ASTM STANDARD D-698. THE CONTRACTOR SHALL, PRIOR TO ANY OPERATIONS INVOLVING FILLING OR BACK FILLING, SUBMIT THE RESULTS OF THE PROCTOR TEST TOGETHER WITH A CERTIFICATION THAT THE SOIL TESTED IS REPRESENTATIVE OF THE MATERIALS TO BE USED ON THE PROJECT. THE TESTS SHALL BE CONDUCTED BY A CERTIFIED MATERIALS TESTING LABORATORY AND THE CERTIFICATIONS MADE BY A LICENSED PROFESSIONAL ENGINEER REPRESENTING THE LABORATORY. THE CONTRACTOR IS RESPONSIBLE FOR ALL COSTS ASSOCIATED WITH THESE TESTS AND THEIR SUBMITTALS.

30. EMBANKMENT FILL AND BACK FILL SHALL BE PLACED IN LIFTS AT A MAXIMUM UN-COMPACTED DEPTH OF 8-INCHES AND 6-INCHES, RESPECTIVELY. DENSITY TESTS SHALL BE CONDUCTED AT THE FOLLOWING FREQUENCIES:
   (A) EMBANKMENTS FOR ROADS, STREETS, DAMS, ETC.: ONE TEST PER LIFT PER 10,000 SF OF LIFT.
   (B) BACK FILL IN TRENCHES: ONE TEST PER LIFT PER 500 LINEAL FEET OF TRENCH.
   (C) BACK FILL AROUND STRUCTURES: ONE TEST PER PER LIFT PER 2,500 SF OF LIFT.

31. ALL EXCAVATION, INCLUDING TRENCHES, SHALL BE KEPT DRY TO PROTECT THE INTEGRITY OF THE SUBSOIL.

32. ALL TEST RESULTS SHALL BE SUBMITTED TO THE AUTHORITY HAVING JURISDICTION'S ENGINEER. FAILURE TO CONDUCT DENSITY TESTS SHALL BE CAUSE FOR NON-ACCEPTANCE OF THE FACILITY. TESTS SHALL BE CONDUCTED AT THE SOLE COST OF THE CONTRACTOR OR HIS AGENT.

33. TRAFFIC CONTROL ON PUBLIC STREETS SHALL BE IN CONFORMANCE WITH THE MANUAL OF UNIFORM TRAFFIC CONTROL DEVICES AND AS FURTHER DIRECTED BY THE GOVERNING INSPECTORS.

34. ANY DISCREPANCIES FOUND BETWEEN THE DRAWINGS AND SPECIFICATIONS AND SITE CONDITIONS OR ANY INCONSISTENCIES OR AMBIGUITIES IN DRAWINGS OR SPECIFICATIONS SHALL BE IMMEDIATELY REPORTED TO THE ENGINEER, IN WRITING, WHO SHALL PROMPTLY ADDRESS SUCH PROBLEMS. WORK DONE BY THE CONTRACTOR AFTER HIS OR HER DISCOVERY OF SUCH DISCREPANCIES, INCONSISTENCIES, OR AMBIGUITIES SHALL BE DONE AT THE CONTRACTOR'S RISK.

35. A PRE-CONSTRUCTION CONFERENCE SHALL BE HELD PRIOR TO THE START OF CONSTRUCTION. THE CONTRACTOR SHALL ARRANGE THE MEETING WITH THE CITY, TOWN, OR COUNTY ENGINEER PRIOR TO THE ISSUANCE OF AN EARTH DISTURBING PERMIT.

36. THE OWNER SHALL PAY ALL WATER AND SEWER AVAILABILITY AND CONNECTION FEES AS REQUIRED BY THE GOVERNING BODY PRIOR TO CONNECTION TO PROPOSED UTILITIES WITH EXISTING MAINS.

37. THE OWNER SHALL PROVIDE THE BOND FOR AND BE THE RESPONSIBLE PARTY ON THE EARTH DISTURBING PERMIT.

38. INSTALL CITY, TOWN, OR COUNTY STANDARD STREET CENTERLINE MONUMENTS WHERE REQUIRED FOR NEW STREETS.

39. INSPECTORS, EITHER OWNER OR ANY AUTHORITY HAVING JURISDICTION, HAVE FULL AUTHORITY TO REJECT FILL OR BACK FILL MATERIALS, REQUIRE UNDERCUTTING OR SUB-GRADE STABILIZATION, REQUIRE PROVISIONS FOR SUB-DRAINAGE, OR REQUIRE OTHER MEASURES WHICH AFFECT THE INTEGRITY OF ROAD AND UTILITY CONSTRUCTION. FAILURE TO COMPLY WITH INSPECTORS DIRECTIVES WILL BE CAUSE FOR NON-ACCEPTANCE OF THE FACILITY.

40. SATISFACTORY MATERIALS FOR USE AS FILL FOR PUBLIC STREETS INCLUDE MATERIALS CLASSIFIED IN ASTM D-2487 AS GW, GP, GM, GC, SW, SP, SM, SC, ML, AND CL GROUPS. THE MOISTURE CONTENT SHALL BE CONTROLLED WITHIN PLUS OR MINUS 2% OF THE OPTIMUM TO FACILITATE COMPACTION. GENERALLY, UNSATISFACTORY MATERIALS INCLUDE MATERIALS CLASSIFIED IN ASTM D-2487 AS PT, CH, MH, OL, OH AND ANY SOIL TOO WET TO FACILITATE COMPACTION. CH AND MH SOILS MAY BE USED SUBJECT TO APPROVAL OF THE CITY, TOWN, OR COUNTY ENGINEER. SOILS SHALL HAVE A MINIMUM DRY DENSITY OF 92LB/CF PER ASTM D-698 AND SHALL HAVE A PLASTICITY INDEX LESS THAT 17.

41. PAVEMENT DESIGN IS BASED UPON A SUBGRADE CBR OF 3 AND AN RF OF 2. UPON BRINGING THE STREET SUBGRADE TO APPROXIMATE ELEVATION, THE CONTRACTOR SHALL COLLECT A MINIMUM OF 3 SOIL SAMPLES FOR CBR DETERMINATION, TO BE TAKEN AT A MAXIMUM INTERVAL OF 300 FEET MEASURED ALONG THE STREET CENTERLINE. THE CBR OF EACH SAMPLE SHALL BE DETERMINED AND THE AVERAGE CBR SHALL BE USED TO DETERMINE THE PAVEMENT STRUCTURE REQUIREMENTS. THE PAVEMENT MATERIALS AND THE AMOUNT THEREOF AS SHOWN ON THE TYPICAL STREET SECTION MAY BE MODIFIED BY THE RESULTS OF THESE TESTS IN ACCORDANCE WITH COUNT STANDARDS AND IF APPROVED BY THE CITY, TOWN, OR COUNTY ENGINEER. A COPY OF ALL SOILS TEST RESULTS SHALL BE SUBMITTED TO THE CITY, TOWN, OR COUNTY ENGINEER PRIOR TO PLACING ANY BASE OR SUB-BASE MATERIAL. THIS WORK SHALL NOT BE REQUIRED ON STREETS CLASSIFIED AS LOCAL/SUB CLASS A. PAVING SECTIONS SHALL NOT BE REDUCED BELOW THE CITY, TOWN, OR COUNTY'S MINIMUM SECTIONS.

42. CG-9B MODIFIED ENTRANCES ARE PERMITTED FOR SINGLE FAMILY RESIDENCES AS ALLOWED IN 3.8.2.5.5 OF THE CITY, TOWN, OR COUNTY'S DESIGN AND CONSTRUCTION STANDARDS MANUAL.

43. INSTALLATION OF ANY UTILITY IN AN EXISTING STREET SHALL COMPLY WITH DRAWING 1A, PAGE 21-A, CHAPTER 7 PF THE CITY DESIGN AND CONSTRUCTION STANDARDS MANUAL, AND FURTHER WITH CITY, TOWN, OR COUNTY TRENCH RESTORATION STANDARDS, A COPY OF WHICH IS AVAILABLE FROM THE ENGINEER.

44. TEST PITS SHALL BE REQUIRED FOR ALL UTILITY CROSSINGS INVOLVING GAS LINES, WATER MAINS 12" IN DIAMETER AND LARGER, SANITARY SEWER CROSSINGS, AND FIBER OPTIC LINES.

45. COMPACTION TESTS FOR STREET PAVEMENT STRUCTURE SHALL BE MADE IN CUT AND FILL AREAS AT THE FOLLOWING MINIMUM FREQUENCIES:
   (A) SUBGRADE: 1 TEST PER LANE PER 6' COMPACTED LIFT PER 500 LINEAR FEET.
   (B) STONE BASE: 1 TEST PER LANE PER 6' COMPACTED LIFT PER 500 LINEAR FEET.
   (C) HOT ASPHALTIC CONCRETE: 1 TEST PER LANE PER LIFT PER 500 LINEAR FEET.

46. COMBINATION UNDERDRAINS, TYPE CD-1, SHALL BE INSTALLED AT THE LOWER END OF THE CUT SECTIONS. UNDERDRAINS, TYPE CD-2, SHALL BE INSTALLED AT THE LOW POINT OF ALL VERTICAL CURVES.

47. STANDARD UD-1 AND UD-3 UNDERDRAINS SHALL BE INSTALLED WHERE INDICATED ON PLANS AND FURTHER WHERE DETERMINED NECESSARY IN THE FIELD BY CITY, TOWN, OR COUNTY INSPECTORS.

48. ANY SURVEY MONUMENT OR PROPERTY CORNER DISTURBED BY THE CONTRACTOR SHALL BE REPLACED BY A LICENSED LAND SURVEYOR AT THE CONTRACTOR'S EXPENSE.

49. PRIOR TO THE START OF CONSTRUCTION, THE CONTRACTOR SHALL VERIFY EXISTING ELEVATIONS AT PAVEMENT INTERFACES AND PIPE DISCHARGE LOCATIONS TO ENSURE PROPER TRANSITION BETWEEN EXISTING AND PROPOSED FACILITIES.

50. SYMBOLS AND LEGENDS OF PROJECT FEATURES ARE GRAPHIC REPRESENTATIONS OF PROPOSED FEATURES AND ARE NOT NECESSARILY SCALED TO THEIR ACTUAL DIMENSIONS OR LOCATIONS. THE CONTRACTOR SHALL REFER TO THE DETAILS PROVIDED, MANUFACTURERS' LITERATURES, SHOP DRAWINGS, AND FIELD MEASUREMENTS OF SUPPLIED PRODUCTS FOR LAYOUT INFORMATION.

51. CONTRACTOR SHALL NOT SOLELY RELY ON ELECTRONIC COPIES OF THE FINAL DESIGN, SPECIFICATIONS, AND DATA FILES THAT ARE OBTAINED FROM THE ENGINEER, BUT SHALL VERIFY THE LOCATION OF ANY FEATURE IN ACCORDANCE WITH PAPER COPIES OF THE PLANS AND SPECIFICATIONS THAT ARE PART OF THE CONTRACT DOCUMENTS.

52. RAILING IN COMPLIANCE WITH LOCAL APPLICABLE CODE SHALL BE PROVIDED ON ALL WALKWAYS, PORCHES, PATIOS, EQUIPMENT PADS, AND SIMILAR FEATURES ALLOWING PEDESTRIAN ACCESS WHERE THE FINISH SURFACE IS 30 INCHES OR MORE MEASURED VERTICALLY TO THE GRADE AT ANY POINT WITHIN 36 INCHES MEASURED HORIZONTALLY TO THE EDGE OF THE PROPOSED FEATURE.

53. THRUST BLOCKS REQUIRED AT ALL WATER LINE FITTINGS.

CITY OF HARRISONBURG GENERAL NOTES (ALL MAY NOT APPLY):

1) ALL AREAS NOT BUILT OR PAVED UPON SHALL BE LANDSCAPED.

2) CONTRACTOR SHALL REFER TO THE ARCHITECTURAL PLANS FOR EXACT BUILDING DIMENSIONS AND POINTS OF ENTRY INTO THE BUILDING FOR ALL UTILITIES.

3) A SEPARATE SIGN PERMIT WILL BE REQUIRED FOR ALL SIGNAGE WITHIN THE SUBDIVISION AND IT IS THE RESPONSIBILITY OF THE OWNER TO OBTAIN THIS DOCUMENT.

4) ANY DUMPSTER PADS SHALL BE SCREENED IN ACCORDANCE WITH THE APPLICABLE CITY, TOWN, & COUNTY REGULATIONS.

5) ALL DIMENSIONS SHOWN ON THESE PLANS ARE TO THE FACE OF THE BUILDING, BACK OF CURB OR THE EDGE OF THE PAVEMENT UNLESS OTHERWISE REFERENCED.

6) WORK ON THIS PROJECT SHALL CONFORM TO THE LATEST EDITIONS OF THE TOWN DESIGN AND CONSTRUCTION STANDARDS MANUAL, THE VIRGINIA DEPARTMENT OF TRANSPORTATION (VDOT) ROAD AND BRIDGE STANDARDS, THE VDOT ROAD AND BRIDGE SPECIFICATIONS, AND THE VIRGINIA EROSION AND SEDIMENT CONTROL HANDBOOK AND REGULATIONS. IN THE EVENT OF CONFLICT BETWEEN ANY OF THESE STANDARDS, SPECIFICATIONS, OR PLANS, THE MOST STRINGENT WILL GOVERN. ALL UTILITIES TO BE DEDICATED TO ANY MUNICIPAL WATER AND/OR SANITARY SEWER SYSTEM SHALL BE CONSTRUCTED AND TESTED TO CONFORM TO THE COMMONWEALTH OF VIRGINIA STATE BOARD OF HEALTH AND THE TOWN DESIGN AND CONSTRUCTION MANUAL.

7) EROSION AND SEDIMENT CONTROL MEASURES SHALL BE MAINTAINED CONTINUOUSLY, RELOCATED WHEN AND AS NECESSARY AND SHALL BE CHECKED AFTER EVERY RAINFALL. SEEDED AREAS SHALL BE CHECKED REGULARLY AND SHALL BE WATERED, FERTILIZED, RESEEDED AND MULCHED AS NECESSARY TO OBTAIN A DENSE STAND OF GRASS.

8) ANY DRAIN INLETS SHALL BE PROTECTED FROM SILTATION. INEFFECTIVE PROTECTION DEVICES SHALL BE REPLACED AND THE INLET CLEANED. FLUSHING IS NOT AN ACCEPTABLE MEANS OF CLEANING.

9) WHEN THE CRUSHED STONE CONSTRUCTION ENTRANCE HAS BEEN COVERED WITH SOIL OR HAS BEEN PUSHED INTO THE SOIL BY CONSTRUCTION TRAFFIC, IT SHALL BE REPLACED WITH A DEPTH OF STONE EQUAL TO THAT OF THE ORIGINAL APPLICATION.

10) THE LOCATION OF EXISTING UTILITIES AS SHOWN, IS APPROXIMATE ONLY. THE CONTRACTOR IS RESPONSIBLE FOR VERIFYING THE LOCATION, SIZE, AND MATERIAL OF ALL EXISTING UTILITIES PRIOR TO ORDERING ANY NEW MATERIALS REQUIRED FOR UTILITY CONNECTIONS. ANY MATERIALS ORDERED PRIOR TO FIELD VERIFICATION OF EXISTING UTILITIES SHALL BE AT THE CONTRACTORS OWN RISK. THE CONTRACTOR SHALL BE RESPONSIBLE FOR THE REPAIR, AT HIS OR HER EXPENSE, OF ALL EXISTING UTILITIES DAMAGED DURING CONSTRUCTION. FORTY-EIGHT HOURS PRIOR TO ANY EXCAVATION THE CONTRACTOR SHALL CALL MISS UTILITY AT (800)-552-7001.

11) ALL UNDERGROUND FACILITIES LOCATED WITHIN THE CITY'S RIGHT-OF-WAY SHALL BE INSTALLED PRIOR TO THE PLACEMENT OF ANY PART OF THE PAVEMENT STRUCTURE.

12) INSTALLATION OF CONCRETE STORM PIPE SHALL BE IN CONFORMANCE WITH VDOT STANDARD DRAWING PB-1.

13) ALL MATERIALS USED FOR FILL OR BACK FILL SHALL BE FREE OF WOOD, ROOTS, ROCKS, BOULDERS OR ANY OTHER NON-COMPACTABLE SOIL TYPE MATERIALS. UNSATISFACTORY MATERIALS ALSO INCLUDE MANMADE FILLS AND REFUSE DEBRIS DERIVED FROM ANY SOURCE.

14) COMPACTION OF FILL MATERIAL UNDER BUILDING SLABS SHALL BE BASED UPON RECOMMENDATIONS OF SOILS ENGINEER AFTER COMPLETION OF STANDARD PROCTOR TEST AND SHALL MEET THE BEARING REQUIREMENTS OF THE STRUCTURAL ENGINEER FOR THE BUILDING. THE CONTRACTOR SHALL BE RESPONSIBLE FOR THE TESTING. TRENCHES OF ANY OTHER DEPRESSION REQUIRING FILL OR BACK FILL SHALL BE COMPACTED TO 95% OF THE MAXIMUM DENSITY AS DETERMINED BY STANDARD PROCTOR TEST AS SET FORTH IN ASTM D-698.

15) MATERIALS USED TO CONSTRUCT EMBANKMENTS FOR ANY PURPOSE, BACK FILL AROUND DRAINAGE STRUCTURES IN UTILITY TRENCHES OR ANY OTHER DEPRESSION REQUIRING FILL OR BACK FILL SHALL BE COMPACTED TO 95% OF MAXIMUM DENSITY AS DETERMINED BY THE STANDARD PROCTOR TEST AS SET FORTH IN ASTM STANDARD D-698. THE CONTRACTOR SHALL, PRIOR TO ANY OPERATIONS INVOLVING FILLING OR BACK FILLING, SUBMIT THE RESULTS OF THE PROCTOR TEST TOGETHER WITH A CERTIFICATION THAT THE SOIL TESTED IS REPRESENTATIVE OF THE MATERIALS TO BE USED ON THE PROJECT. THE TESTS SHALL BE CONDUCTED BY A CERTIFIED MATERIALS TESTING LABORATORY AND THE CERTIFICATIONS MADE BY A LICENSED PROFESSIONAL ENGINEER REPRESENTING THE LABORATORY. THE CONTRACTOR IS RESPONSIBLE FOR ALL COSTS ASSOCIATED WITH THESE TESTS AND THEIR SUBMITTALS.

16) EMBANKMENT FILL AND BACK FILL SHALL BE PLACED IN LIFTS AT A MAXIMUM UNCOMPACTED DEPTH OF 8-INCHES AND 6-INCHES, RESPECTIVELY. DENSITY TESTS SHALL BE CONDUCTED AT THE FOLLOWING FREQUENCIES:
   (A) EMBANKMENTS FOR ROADS, STREETS, DAMS, ETC.: ONE TEST PER LIFT PER 10,000 SF OF LIFT.
   (B) BACK FILL IN TRENCHES: ONE TEST PER LIFT PER 500 LINEAL FEET OF TRENCH.
   (C) BACK FILL AROUND STRUCTURES: ONE TEST PER PER LIFT PER 2,500 SF OF LIFT.

17) ALL EXCAVATION, INCLUDING TRENCHES, SHALL BE KEPT DRY TO PROTECT THE INTEGRITY OF THE SUBSOIL.

18) ALL TEST RESULTS SHALL BE SUBMITTED TO THE TOWN ENGINEER. FAILURE TO CONDUCT DENSITY TESTS SHALL BE CAUSE FOR NON-ACCEPTANCE OF THE FACILITY. TESTS SHALL BE CONDUCTED AT THE SOLE COST OF THE CONTRACTOR OR HIS AGENT.

19) TRAFFIC CONTROL ON PUBLIC STREETS SHALL BE IN CONFORMANCE WITH THE MANUAL OF UNIFORM TRAFFIC CONTROL DEVICES AND AS FURTHER DIRECTED BY THE GOVERNING INSPECTORS.

20) ANY DISCREPANCIES FOUND BETWEEN THE DRAWINGS AND SPECIFICATIONS AND SITE CONDITIONS OR ANY INCONSISTENCIES OR AMBIGUITIES IN DRAWINGS OR SPECIFICATIONS SHALL BE IMMEDIATELY REPORTED TO THE ENGINEER, IN WRITING, WHO SHALL PROMPTLY ADDRESS SUCH PROBLEMS. WORK DONE BY THE CONTRACTOR AFTER HIS OR HER DISCOVERY OF SUCH DISCREPANCIES, INCONSISTENCIES, OR AMBIGUITIES SHALL BE DONE AT THE CONTRACTOR'S RISK.

21) A PRE-CONSTRUCTION CONFERENCE SHALL BE HELD PRIOR TO THE START OF CONSTRUCTION. THE CONTRACTOR SHALL ARRANGE THE MEETING WITH THE CITY ENGINEER PRIOR TO THE ISSUANCE OF AN EARTH DISTURBING PERMIT.

22) THE OWNER SHALL PAY ALL WATER AND SEWER AVAILABILITY AND CONNECTION FEES AS REQUIRED BY THE GOVERNING BODY PRIOR TO CONNECTION TO PROPOSED UTILITIES WITH EXISTING MAINS.

23) THE OWNER SHALL PROVIDE THE BOND FOR AND BE THE RESPONSIBLE PARTY ON THE EARTH DISTURBING PERMIT. the earth disturbing permit.

24) INSTALL TOWN STANDARD STREET CENTERLINE MONUMENTS WHERE REQUIRED FOR NEW STREETS.

25) TOWN INSPECTORS HAVE FULL AUTHORITY TO REJECT FILL OR BACK FILL MATERIALS, REQUIRE UNDERCUTTING OR SUB-GRADE STABILIZATION, REQUIRE PROVISIONS FOR SUB-DRAINAGE, OR REQUIRE OTHER MEASURES WHICH AFFECT THE INTEGRITY OF ROAD AND UTILITY CONSTRUCTION. FAILURE TO COMPLY WITH INSPECTORS DIRECTIVES WILL BE CAUSE FOR NON-ACCEPTANCE OF THE FACILITY.

26) SATISFACTORY MATERIALS FOR USE AS FILL FOR PUBLIC STREETS INCLUDE MATERIALS CLASSIFIED IN ASTM D-2487 AS GW, GP, GM, GC, SW, SP, SM, SC, ML, AND CL GROUPS. THE MOISTURE CONTENT SHALL BE CONTROLLED WITHIN PLUS OR MINUS 2% OF THE OPTIMUM TO FACILITATE COMPACTION. GENERALLY, UNSATISFACTORY MATERIALS INCLUDE MATERIALS CLASSIFIED IN ASTM D-2487 AS PT, CH, MH, OL, OH AND ANY SOIL TOO WET TO FACILITATE COMPACTION. CH AND MH SOILS MAY BE USED SUBJECT TO APPROVAL OF THE TOWN ENGINEER. SOILS SHALL HAVE A MINIMUM DRY DENSITY OF 92LB/CF PER ASTM D-698 AND SHALL HAVE A PLASTICITY INDEX LESS THAT 17.

27) PAVEMENT DESIGN IS BASED UPON A SUBGRADE CBR OF 3 AND AN RF OF 2. UPON BRINGING THE STREET SUBGRADE TO APPROXIMATE ELEVATION, THE CONTRACTOR SHALL COLLECT A MINIMUM OF 3 SOIL SAMPLES FOR CBR DETERMINATION, TO BE TAKEN AT A MAXIMUM INTERVAL OF 300 FEET MEASURED ALONG THE STREET CENTERLINE. THE CBR OF EACH SAMPLE SHALL BE DETERMINED AND THE AVERAGE CBR SHALL BE USED TO DETERMINE THE PAVEMENT STRUCTURE REQUIREMENTS. THE PAVEMENT MATERIALS AND THE AMOUNT THEREOF AS SHOWN ON THE TYPICAL STREET SECTION MAY BE MODIFIED BY THE RESULTS OF THESE TESTS IN ACCORDANCE WITH TOWN STANDARDS AND IF APPROVED

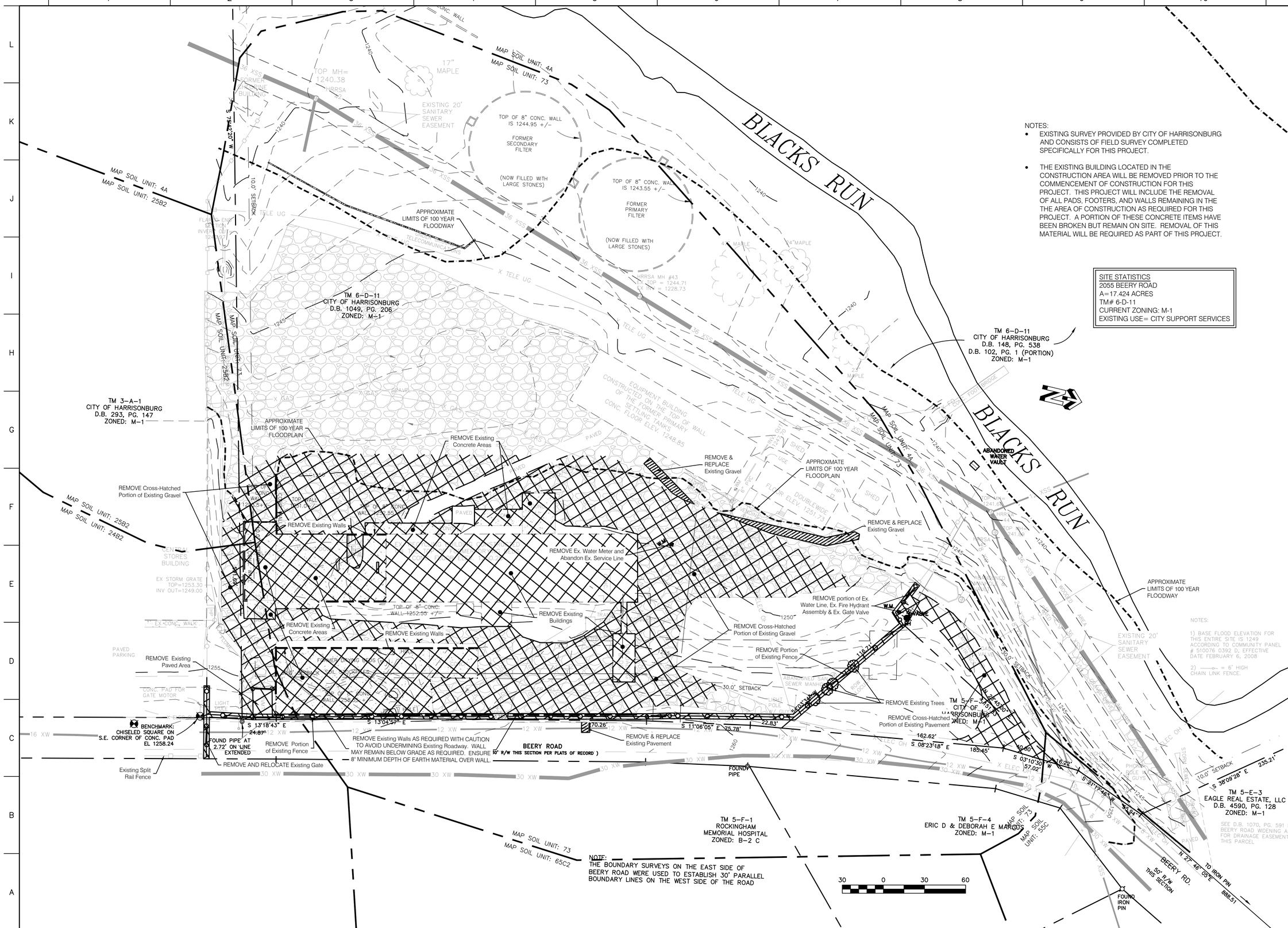

NOTES:

- EXISTING SURVEY PROVIDED BY CITY OF HARRISONBURG AND CONSISTS OF FIELD SURVEY COMPLETED SPECIFICALLY FOR THIS PROJECT.
- THE EXISTING BUILDING LOCATED IN THE CONSTRUCTION AREA WILL BE REMOVED PRIOR TO THE COMMENCEMENT OF CONSTRUCTION FOR THIS PROJECT. THIS PROJECT WILL INCLUDE THE REMOVAL OF ALL PADS, FOOTERS, AND WALLS REMAINING IN THE THE AREA OF CONSTRUCTION AS REQUIRED FOR THIS PROJECT. A PORTION OF THESE CONCRETE ITEMS HAVE BEEN BROKEN BUT REMAIN ON SITE. REMOVAL OF THIS MATERIAL WILL BE REQUIRED AS PART OF THIS PROJECT.

SITE STATISTICS
2055 BEERY ROAD
A=17.424 ACRES
TM# 6-D-11
CURRENT ZONING: M-1
EXISTING USE= CITY SUPPORT SERVICES

NOTE:
THE BOUNDARY SURVEYS ON THE EAST SIDE OF BEERY ROAD WERE USED TO ESTABLISH 30' PARALLEL BOUNDARY LINES ON THE WEST SIDE OF THE ROAD

NOTES:
1) BASE FLOOD ELEVATION FOR THIS ENTIRE SITE IS 1249 ACCORDING TO COMMUNITY PANEL # 510076 0392 D, EFFECTIVE DATE FEBRUARY 6, 2008
2) ——— = 6' HIGH CHAIN LINK FENCE.

CITY OF HARRISONBURG

SOLID WASTE TRANSFER STATION
2055 BERRY ROAD

HARRISONBURG, VA

VALLEY | ENGINEERING
IDEAS MADE REAL
3231 PEOPLES DRIVE
HARRISONBURG, VIRGINIA 22801
TELEPHONE (540) 434-6365 OR (800) 343-6365
FAX (540) 432-0693
www.valleyesp.com

COPYRIGHT HELD BY VALLEY ENGINEERING, P.C. ALL RIGHTS RESERVED. THESE DRAWINGS MAY NOT BE REPRODUCED IN ANY FORM WITHOUT WRITTEN PERMISSION BY VALLEY ENGINEERING, P.C.

COMMONWEALTH OF VIRGINIA
DANIEL K. MICHAELA
PLic. No. 028947
PROFESSIONAL ENGINEER
10-11-16

BID SET

REVISIONS:
08/17/2016 - CITY COMMENTS
10/04/2016 - PER CITY COMMENTS

DATE: 7/13/2016
PROJECT No.: 10921-2
EXP./CLIENT No.: 10921-2
SCALE: TBLKSCALE

EXISTING CONDITIONS, DEMOLITION PLAN, & SOILS INFORMATION

SHEET NO.:
C2.01

E&S MINIMUM STANDARDS

A VESCP MUST BE CONSISTENT WITH THE FOLLOWING CRITERIA, TECHNIQUES AND METHODS:

1. PERMANENT OR TEMPORARY SOIL STABILIZATION SHALL BE APPLIED TO DENUDED AREAS WITHIN SEVEN DAYS AFTER FINAL GRADE IS REACHED ON ANY PORTION OF THE SITE. TEMPORARY SOIL STABILIZATION SHALL BE APPLIED WITHIN SEVEN DAYS TO DENUDED AREAS THAT MAY NOT BE AT FINAL GRADE BUT WILL REMAIN DORMANT FOR LONGER THAN 14 DAYS. PERMANENT STABILIZATION SHALL BE APPLIED TO AREAS THAT ARE TO BE LEFT DORMANT FOR MORE THAN ONE YEAR.

2. DURING CONSTRUCTION OF THE PROJECT, SOIL STOCK PILES AND BORROW AREAS SHALL BE STABILIZED OR PROTECTED WITH SEDIMENT TRAPPING MEASURES. THE APPLICANT IS RESPONSIBLE FOR THE TEMPORARY PROTECTION AND PERMANENT STABILIZATION OF ALL SOIL STOCKPILES ON SITE AS WELL AS BORROW AREAS AND SOIL INTENTIONALLY TRANSPORTED FROM THE PROJECT SITE.

3. A PERMANENT VEGETATIVE COVER SHALL BE ESTABLISHED ON DENUDED AREAS NOT OTHERWISE PERMANENTLY STABILIZED. PERMANENT VEGETATION SHALL NOT BE CONSIDERED ESTABLISHED UNTIL A GROUND COVER IS ACHIEVED THAT IS UNIFORM, MATURE ENOUGH TO SURVIVE AND WILL INHIBIT EROSION.

4. SEDIMENT BASINS AND TRAPS, PERIMETER DIKES, SEDIMENT BARRIERS AND OTHER MEASURES INTENDED TO TRAP SEDIMENT SHALL BE CONSTRUCTED AS A FIRST STEP IN ANY LAND-DISTURBING ACTIVITY AND SHALL BE MADE FUNCTIONAL BEFORE UPSLOPE LAND DISTURBANCE TAKES PLACE.

5. STABILIZATION MEASURES SHALL BE APPLIED TO EARTHEN STRUCTURES SUCH AS DAMS, DIKES AND DIVERSIONS IMMEDIATELY AFTER INSTALLATION.

6. SEDIMENT TRAPS AND SEDIMENT BASINS SHALL BE DESIGNED AND CONSTRUCTED BASED UPON THE TOTAL DRAINAGE AREA TO BE SERVED BY THE TRAP OR BASIN.

A. THE MINIMUM STORAGE CAPACITY OF A SEDIMENT TRAP SHALL BE 134 CUBIC YARDS PER ACRE OF DRAINAGE AREA AND THE TRAP SHALL ONLY CONTROL DRAINAGE AREAS LESS THAN THREE ACRES.

B. SURFACE RUNOFF FROM DISTURBED AREAS THAT IS COMPRISED OF FLOW FROM DRAINAGE AREAS GREATER THAN OR EQUAL TO THREE ACRES SHALL BE CONTROLLED BY A SEDIMENT BASIN. THE MINIMUM STORAGE CAPACITY OF A SEDIMENT BASIN SHALL BE 134 CUBIC YARDS PER ACRE OF DRAINAGE AREA. THE OUTFALL SYSTEM SHALL, AT A MINIMUM, MAINTAIN THE STRUCTURAL INTEGRITY OF THE BASIN DURING A 25-YEAR STORM OF 24-HOUR DURATION. RUNOFF COEFFICIENTS USED IN RUNOFF CALCULATIONS SHALL CORRESPOND TO A BARE EARTH CONDITION OR THOSE CONDITIONS EXPECTED TO EXIST WHILE THE SEDIMENT BASIN IS UTILIZED.

7. CUT AND FILL SLOPES SHALL BE DESIGNED AND CONSTRUCTED IN A MANNER THAT WILL MINIMIZE EROSION. SLOPES THAT ARE FOUND TO BE ERODING EXCESSIVELY WITHIN ONE YEAR OF PERMANENT STABILIZATION SHALL BE PROVIDED WITH ADDITIONAL SLOPE STABILIZING MEASURES UNTIL THE PROBLEM IS CORRECTED.

8. CONCENTRATED RUNOFF SHALL NOT FLOW DOWN CUT OR FILL SLOPES UNLESS CONTAINED WITHIN AN ADEQUATE TEMPORARY OR PERMANENT CHANNEL, FLUME OR SLOPE DRAIN STRUCTURE.

9. WHENEVER WATER SEEPS FROM A SLOPE FACE, ADEQUATE DRAINAGE OR OTHER PROTECTION SHALL BE PROVIDED.

10. ALL STORM SEWER INLETS THAT ARE MADE OPERABLE DURING CONSTRUCTION SHALL BE PROTECTED SO THAT SEDIMENT-LADEN WATER CANNOT ENTER THE CONVEYANCE SYSTEM WITHOUT FIRST BEING FILTERED OR OTHERWISE TREATED TO REMOVE SEDIMENT.

11. BEFORE NEWLY CONSTRUCTED STORMWATER CONVEYANCE CHANNELS OR PIPES ARE MADE OPERATIONAL, ADEQUATE OUTLET PROTECTION AND ANY REQUIRED TEMPORARY OR PERMANENT CHANNEL LINING SHALL BE INSTALLED IN BOTH THE CONVEYANCE CHANNEL AND RECEIVING CHANNEL.

12. WHEN WORK IN A LIVE WATERCOURSE IS PERFORMED, PRECAUTIONS SHALL BE TAKEN TO MINIMIZE ENCROACHMENT, CONTROL SEDIMENT TRANSPORT AND STABILIZE THE WORK AREA TO THE GREATEST EXTENT POSSIBLE DURING CONSTRUCTION. NONERODIBLE MATERIAL SHALL BE USED FOR THE CONSTRUCTION OF CAUSEWAYS AND COFFERDAMS. EARTHEN FILL MAY BE USED FOR THESE STRUCTURES IF ARMORED BY NONERODIBLE COVER MATERIALS.

13. WHEN A LIVE WATERCOURSE MUST BE CROSSED BY CONSTRUCTION VEHICLES MORE THAN TWICE IN ANY SIX-MONTH PERIOD, A TEMPORARY VEHICULAR STREAM CROSSING CONSTRUCTED OF NONERODIBLE MATERIAL SHALL BE PROVIDED.

14. ALL APPLICABLE FEDERAL, STATE AND LOCAL CHAPTERS PERTAINING TO WORKING IN OR CROSSING LIVE WATERCOURSES SHALL BE MET.

15. THE BED AND BANKS OF A WATERCOURSE SHALL BE STABILIZED IMMEDIATELY AFTER WORK IN THE WATERCOURSE IS COMPLETED.

16. UNDERGROUND UTILITY LINES SHALL BE INSTALLED IN ACCORDANCE WITH THE FOLLOWING STANDARDS IN ADDITION TO OTHER APPLICABLE CRITERIA:

A. NO MORE THAN 500 LINEAR FEET OF TRENCH MAY BE OPENED AT ONE TIME.

B. EXCAVATED MATERIAL SHALL BE PLACED ON THE UPHILL SIDE OF TRENCHES.

C. EFFLUENT FROM DEWATERING OPERATIONS SHALL BE FILTERED OR PASSED THROUGH AN APPROVED SEDIMENT TRAPPING DEVICE, OR BOTH, AND DISCHARGED IN A MANNER THAT DOES NOT ADVERSELY AFFECT FLOWING STREAMS OR OFF-SITE PROPERTY.

D. MATERIAL USED FOR BACKFILLING TRENCHES SHALL BE PROPERLY COMPACTED IN ORDER TO MINIMIZE EROSION AND PROMOTE STABILIZATION.

E. RESTABILIZATION SHALL BE ACCOMPLISHED IN ACCORDANCE WITH THIS CHAPTER.

F. APPLICABLE SAFETY CHAPTERS SHALL BE COMPLIED WITH.

17. WHERE CONSTRUCTION VEHICLE ACCESS ROUTES INTERSECT PAVED OR PUBLIC ROADS, PROVISIONS SHALL BE MADE TO MINIMIZE THE TRANSPORT OF SEDIMENT BY VEHICULAR TRACKING ONTO THE PAVED SURFACE. WHERE SEDIMENT IS TRANSPORTED ONTO A PAVED OR PUBLIC ROAD SURFACE, THE ROAD SURFACE SHALL BE CLEANED THOROUGHLY AT THE END OF EACH DAY. SEDIMENT SHALL BE REMOVED FROM THE ROADS BY SHOVELING OR SWEEPING AND TRANSPORTED TO A SEDIMENT CONTROL DISPOSAL AREA. STREET WASHING SHALL BE ALLOWED ONLY AFTER SEDIMENT IS REMOVED IN THIS MANNER. THIS PROVISION SHALL APPLY TO INDIVIDUAL DEVELOPMENT LOTS AS WELL AS TO LARGER LAND-DISTURBING ACTIVITIES.

18. ALL TEMPORARY EROSION AND SEDIMENT CONTROL MEASURES SHALL BE REMOVED WITHIN 30 DAYS AFTER FINAL SITE STABILIZATION OR AFTER THE TEMPORARY MEASURES ARE NO LONGER NEEDED, UNLESS OTHERWISE AUTHORIZED BY THE VESCP AUTHORITY. TRAPPED SEDIMENT AND THE DISTURBED SOIL AREAS RESULTING FROM THE DISPOSITION OF TEMPORARY MEASURES SHALL BE PERMANENTLY STABILIZED TO PREVENT FURTHER EROSION AND SEDIMENTATION.

19. PROPERTIES AND WATERWAYS DOWNSTREAM FROM DEVELOPMENT SITES SHALL BE PROTECTED FROM SEDIMENT DEPOSITION, EROSION AND DAMAGE DUE TO INCREASES IN VOLUME, VELOCITY AND PEAK FLOW RATE OF STORMWATER RUNOFF FOR THE STATED FREQUENCY STORM OF 24-HOUR DURATION IN ACCORDANCE WITH THE FOLLOWING STANDARDS AND CRITERIA. STREAM RESTORATION AND RELOCATION PROJECTS THAT INCORPORATE NATURAL CHANNEL DESIGN CONCEPTS ARE NOT MAN-MADE CHANNELS AND SHALL BE EXEMPT FROM ANY FLOW RATE CAPACITY AND VELOCITY REQUIREMENTS FOR NATURAL OR MAN-MADE CHANNELS:

A. CONCENTRATED STORMWATER RUNOFF LEAVING A DEVELOPMENT SITE SHALL BE DISCHARGED DIRECTLY INTO AN ADEQUATE NATURAL OR MAN-MADE RECEIVING CHANNEL, PIPE OR STORM SEWER SYSTEM. FOR THOSE SITES WHERE RUNOFF IS DISCHARGED INTO A PIPE OR PIPE SYSTEM, DOWNSTREAM STABILITY ANALYSES AT THE OUTFALL OF THE PIPE OR PIPE SYSTEM SHALL BE PERFORMED.

B. ADEQUACY OF ALL CHANNELS AND PIPES SHALL BE VERIFIED IN THE FOLLOWING MANNER:

(1) THE APPLICANT SHALL DEMONSTRATE THAT THE TOTAL DRAINAGE AREA TO THE POINT OF ANALYSIS WITHIN THE CHANNEL IS ONE HUNDRED TIMES GREATER THAN THE CONTRIBUTING DRAINAGE AREA OF THE PROJECT IN QUESTION; OR

(2)(A) NATURAL CHANNELS SHALL BE ANALYZED BY THE USE OF A TWO-YEAR STORM TO VERIFY THAT STORMWATER WILL NOT OVERTOP CHANNEL BANKS NOR CAUSE EROSION OF CHANNEL BED OR BANKS.

(B) ALL PREVIOUSLY CONSTRUCTED MAN-MADE CHANNELS SHALL BE ANALYZED BY THE USE OF A TEN-YEAR STORM TO VERIFY THAT STORMWATER WILL NOT OVERTOP ITS BANKS AND BY THE USE OF A TWO-YEAR STORM TO DEMONSTRATE THAT STORMWATER WILL NOT CAUSE EROSION OF CHANNEL BED OR BANKS; AND

(C) PIPES AND STORM SEWER SYSTEMS SHALL BE ANALYZED BY THE USE OF A TEN-YEAR STORM TO VERIFY THAT STORMWATER WILL BE CONTAINED WITHIN THE PIPE OR SYSTEM.

E&S MINIMUM STANDARDS (cont.)

C. IF EXISTING NATURAL RECEIVING CHANNELS OR PREVIOUSLY CONSTRUCTED MAN-MADE CHANNELS OR PIPES ARE NOT ADEQUATE, THE APPLICANT SHALL:

(1) IMPROVE THE CHANNELS TO A CONDITION WHERE A TEN-YEAR STORM WILL NOT OVERTOP THE BANKS AND A TWO-YEAR STORM WILL NOT CAUSE EROSION TO CHANNEL THE BED OR BANKS; OR

(2) IMPROVE THE PIPE OR PIPE SYSTEM TO A CONDITION WHERE THE TEN-YEAR STORM IS CONTAINED WITHIN THE APPURTENANCES;

(3) DEVELOP A SITE DESIGN THAT WILL NOT CAUSE THE PRE-DEVELOPMENT PEAK RUNOFF RATE FROM A TWO-YEAR STORM TO INCREASE WHEN RUNOFF OUTFALLS INTO A NATURAL CHANNEL OR WILL NOT CAUSE THE PRE-DEVELOPMENT PEAK RUNOFF RATE FROM A TEN-YEAR STORM TO INCREASE WHEN RUNOFF OUTFALLS INTO A MAN-MADE CHANNEL; OR

(4) PROVIDE A COMBINATION OF CHANNEL IMPROVEMENT, STORMWATER DETENTION OR OTHER MEASURES WHICH IS SATISFACTORY TO THE VESCP AUTHORITY TO PREVENT DOWNSTREAM EROSION.

D. THE APPLICANT SHALL PROVIDE EVIDENCE OF PERMISSION TO MAKE THE IMPROVEMENTS.

E. ALL HYDROLOGIC ANALYSES SHALL BE BASED ON THE EXISTING WATERSHED CHARACTERISTICS AND THE ULTIMATE DEVELOPMENT CONDITION OF THE SUBJECT PROJECT.

F. IF THE APPLICANT CHOOSES AN OPTION THAT INCLUDES STORMWATER DETENTION, HE SHALL OBTAIN APPROVAL FROM THE VESCP OF A PLAN FOR MAINTENANCE OF THE DETENTION FACILITIES. THE PLAN SHALL SET FORTH THE MAINTENANCE REQUIREMENTS OF THE FACILITY AND THE PERSON RESPONSIBLE FOR PERFORMING THE MAINTENANCE.

G. OUTFALL FROM A DETENTION FACILITY SHALL BE DISCHARGED TO A RECEIVING CHANNEL, AND ENERGY DISSIPATORS SHALL BE PLACED AT THE OUTFALL OF ALL DETENTION FACILITIES AS NECESSARY TO PROVIDE A STABILIZED TRANSITION FROM THE FACILITY TO THE RECEIVING CHANNEL.

H. ALL ON-SITE CHANNELS MUST BE VERIFIED TO BE ADEQUATE.

I. INCREASED VOLUMES OF SHEET FLOWS THAT MAY CAUSE EROSION OR SEDIMENTATION ON ADJACENT PROPERTY SHALL BE DIVERTED TO A STABLE OUTLET, ADEQUATE CHANNEL, PIPE OR PIPE SYSTEM, OR TO A DETENTION FACILITY.

J. IN APPLYING THESE STORMWATER MANAGEMENT CRITERIA, INDIVIDUAL LOTS OR PARCELS IN A RESIDENTIAL, COMMERCIAL OR INDUSTRIAL DEVELOPMENT SHALL NOT BE CONSIDERED TO BE SEPARATE DEVELOPMENT PROJECTS. INSTEAD, THE DEVELOPMENT, AS A WHOLE, SHALL BE CONSIDERED TO BE A SINGLE DEVELOPMENT PROJECT. HYDROLOGIC PARAMETERS THAT REFLECT THE ULTIMATE DEVELOPMENT CONDITION SHALL BE USED IN ALL ENGINEERING CALCULATIONS.

K. ALL MEASURES USED TO PROTECT PROPERTIES AND WATERWAYS SHALL BE EMPLOYED IN A MANNER WHICH MINIMIZES IMPACTS ON THE PHYSICAL, CHEMICAL AND BIOLOGICAL INTEGRITY OF RIVERS, STREAMS AND OTHER WATERS OF THE STATE.

L. ANY PLAN APPROVED PRIOR TO JULY 1, 2014, THAT PROVIDES FOR STORMWATER MANAGEMENT THAT ADDRESSES ANY FLOW RATE CAPACITY AND VELOCITY REQUIREMENTS FOR NATURAL OR MAN-MADE CHANNELS SHALL SATISFY THE FLOW RATE CAPACITY AND VELOCITY REQUIREMENTS FOR NATURAL OR MAN-MADE CHANNELS IF THE PRACTICES ARE DESIGNED TO (I) DETAIN THE WATER QUALITY VOLUME AND TO RELEASE IT OVER 48 HOURS; (II) DETAIN AND RELEASE OVER A 24-HOUR PERIOD THE EXPECTED RAINFALL RESULTING FROM THE ONE YEAR, 24-HOUR STORM; AND (III) REDUCE THE ALLOWABLE PEAK FLOW RATE RESULTING FROM THE 1.5, 2, AND 10-YEAR, 24-HOUR STORMS TO A LEVEL THAT IS LESS THAN OR EQUAL TO THE PEAK FLOW RATE FROM THE SITE ASSUMING IT WAS IN A GOOD FORESTED CONDITION, ACHIEVED THROUGH MULTIPLICATION OF THE FORESTED PEAK FLOW RATE BY A REDUCTION FACTOR THAT IS EQUAL TO THE RUNOFF VOLUME FROM THE SITE WHEN IT WAS IN A GOOD FORESTED CONDITION DIVIDED BY THE RUNOFF VOLUME FROM THE SITE IN ITS PROPOSED CONDITION, AND SHALL BE EXEMPT FROM ANY FLOW RATE CAPACITY AND VELOCITY REQUIREMENTS FOR NATURAL OR MAN-MADE CHANNELS AS DEFINED IN ANY REGULATIONS PROMULGATED PURSUANT TO § 10.1-562 OR 10.1-570 OF THE ACT.

M. FOR PLANS APPROVED ON AND AFTER JULY 1, 2014, THE FLOW RATE CAPACITY AND VELOCITY REQUIREMENTS OF § 10.1-561 A OF THE ACT AND THIS SUBSECTION SHALL BE SATISFIED BY COMPLIANCE WITH WATER QUANTITY REQUIREMENTS IN THE STORMWATER MANAGEMENT ACT (§ 10.1-603.2 ET SEQ. OF THE CODE OF VIRGINIA) AND ATTENDANT REGULATIONS, UNLESS SUCH LAND-DISTURBING ACTIVITIES ARE IN ACCORDANCE WITH 4VAC50-60-48 OF THE VIRGINIA STORMWATER MANAGEMENT PROGRAM (VSMP) PERMIT REGULATIONS.

N. COMPLIANCE WITH THE WATER QUANTITY MINIMUM STANDARDS SET OUT IN 4VAC50-60-66 OF THE VIRGINIA STORMWATER MANAGEMENT PROGRAM (VSMP) PERMIT REGULATIONS SHALL BE DEEMED TO SATISFY THE REQUIREMENTS OF MINIMUM STANDARD 19.

EROSION CONTROL NOTES:

1. THE CONTRACTOR SHALL ARRANGE FOR A PRE-CONSTRUCTION CONFERENCE WITH THE APPROPRIATE EROSION AND SEDIMENT CONTROL DIRECTOR 48 HOURS PRIOR TO BEGINNING WORK.
2. ALL EROSION CONTROL DEVICES AS SHOWN OR AS REQUIRED ARE TO BE CONSTRUCTED TO STANDARDS AND SPECIFICATIONS OF VIRGINIA EROSION AND SEDIMENT CONTROL HANDBOOK (LATEST EDITION) AND ARE TO BE IN PLACE PRIOR TO ALL CONSTRUCTION.
3. THIS PLAN IS NOT COMPLETE WITHOUT THE APPROVED NARRATIVE.
4. EROSION AND SEDIMENT CONTROL MEASURES SHALL BE MAINTAINED CONTINUOUSLY, RELOCATED WHEN AND AS NECESSARY AND SHALL BE CHECKED AFTER EVERY RAINFALL. SEEDED AREAS SHALL BE CHECKED REGULARLY AND SHALL BE WATERED, FERTILIZED, RESEEDED AND MULCHED AS NECESSARY TO OBTAIN A DENSE STAND OF GRASS.
5. ALL DISTURBED AREAS NOT PAVED OR BUILT UPON ARE TO BE FERTILIZED, SEEDED, AND MULCHED BY THE CONTRACTOR IN ACCORDANCE WITH THE VIRGINIA EROSION AND SEDIMENT CONTROL REGULATIONS. (LATEST EDITION).
6. WHEN THE CRUSHED STONE CONSTRUCTION ENTRANCE HAS BEEN COVERED WITH SOIL OR HAS BEEN PUSHED INTO THE SOIL BY CONSTRUCTION TRAFFIC, IT SHALL BE REPLACED WITH A DEPTH OF STONE EQUAL TO THAT OF ORIGINAL APPLICATION.
7. ALL DRAIN INLETS SHALL BE PROTECTED FROM SILTATION. INEFFECTIVE PROTECTION DEVICES SHALL BE IMMEDIATELY REPLACED AND THE INLET CLEANED. FLUSHING IS NOT AN ACCEPTABLE METHOD OF CLEANING.
8. GRADE AREAS ADJACENT TO BUILDING TO ACHIEVE POSITIVE DRAINAGE AWAY FROM THE STRUCTURE AND TO PREVENT PONDING IN SWALES.
9. ALL DISTURBED AREAS NOT PAVED OR BUILT UPON SHALL BE SEEDED, MULCHED AND FERTILIZED. PERFORM PERMANENT TOP SOILING, SEEDING, LANDSCAPING, FERTILIZING, AND MULCHING AS SOON AFTER FINISH GRADING AS POSSIBLE. SEEDING SHALL COMPLY WITH THE FOLLOWING:

A. TOPSOIL - 6 INCH MINIMUM FOR PERMANENT TURF

B. FERTILIZER - 450 POUNDS PER ACRES OF 10-20-10 FERTILIZE OR EQUIVALENT POUNDAGE OF DIFFERENT ANALYSIS. WORK INTO SOIL PRIOR TO SEEDING.

C. LIME (PERMANENT SEEDING) - AGRICULTURAL LIME SPREAD AT RATE OF 2 TONS/ACRE. WORK INTO SOIL PRIOR TO SEEDING.

D. MULCH - CHOPPED STRAW AT RATE OF 2 TONS PER ACRE AND TACKED IN PLACE. HYDRO-MULCH AT RATE OF 30 BALES PER ACRE.

EROSION AND SEDIMENT CONTROL NARRATIVE

PROJECT DESCRIPTION
THE PURPOSE OF THIS PROJECT INVOLVES THE DEMOLITION OF AN EXISTING STRUCTURE AND MISCELLANEOUS INFRASTRUCTURE; THE CONSTRUCTION OF A NEW WASTE TRANSFER STATION; CONSTRUCTION OF NEW VDOT ENTRANCE; PAVING AROUND THE PROPOSED BUILDING; AND INSTALLATION OF ALL ASSOCIATED WATER, SANITARY SEWER, AND STORM SEWER INVOLVED IN SUCH SITE IMPROVEMENTS. THE APPROXIMATE DISTURBED AREA ASSOCIATED WITH THIS PROJECT IS ±3.64 ACRES. THE TOTAL AREA OF THE SITE IS 17.429 ACRES. THE APPROXIMATE EXISTING IMPERVIOUS AREA IS 2.60 ACRES, WITH FINAL IMPERVIOUS AREA EQUAL TO 2.70 ACRES. TIMING FOR CONSTRUCTION OF THIS PROJECT IS TO BE DETERMINED.

EXISTING SITE CONDITIONS
CURRENTLY THE SITE CONSISTS OF EXISTING MISCELLANEOUS BUILDINGS AND RELATED INFRASTRUCTURE. EXISTING SLOPES RANGE FROM 3% TO 33% AND DRAINS DIRECTLY TO BLACKS RUN.

ADJACENT PROPERTY
THE SITE AREA FOR THIS PROJECT IS BOUND TO THE WEST BY BLACKS RUN AND THE CHESAPEAKE WESTERN RAILWAY; TO THE NORTH BY PROPERTY OWNED BY EAGLE REAL ESTATE, LLC,, ZONED: M-1; TO THE EAST BY BEERY ROAD AND PROPERTY OWNED BY CITY OF HARRISONBURG, ZONED M-1; AND TO THE SOUTH BY PROPERTY OWNED BY CITY OF HARRISONBURG, ZONED M-1.

OFF-SITE AREAS:
MINOR WORK IS PLANNED WITHIN OFF-SITE AREAS. THE CITY OF HARRISONBURG CURRENTLY OWNS THE OFF-SITE AREA WHERE THESE MINOR IMPROVEMENTS ARE PROPOSED. ALL UTILITIES AND FOUNDATIONS SHALL BE DISPOSED OF PROPERLY AT THE LANDFILL OR AN APPROVED SITE.

SOILS
SOIL DATA OBTAINED FROM "SOIL SURVEY OF ROCKINGHAM COUNTY, VIRGINIA ", 1982:

- (4A) AQUIC UDIFLUVENTS, MODERATELY WELL TO POORLY DRAINED, SLOW RUNOFF, MEDIUM TO HIGH WATER CAPACITY
- (24B2) ENDCAV SILT LOAM, 2 TO 7 PERCENT SLOPES, WELL DRAINED, K=0.37, MEDIUM RUNOFF, MODERATE WATER CAPACITY, 0.17-0.22 IN/IN., HYDROLOGIC GROUP "C"
- (25B2) ENDCAV SILT LOAM, 2 TO 7 PERCENT SLOPES, WELL DRAINED, K=0.37, MEDIUM RUNOFF, MODERATE WATER CAPACITY, 0.17-0.22 IN/IN., HYDROLOGIC GROUP "C"
- (55C) ROCK OUTCROP-CARBO COMPLEX, 0 TO 20 PERCENT SLOPES, WELL DRAINED, K=0.37, MEDIUM TO RAPID RUNOFF, LOW AVAILABLE WATER CAPACITY, 0.16-0.19 IN/IN., HYDROLOGIC GROUP "C"
- (73) URBAN LAND

CRITICAL EROSION AREAS
ALL 3:1 SLOPES AND GREATER, AREAS AT PIPE OUTFALLS, THE SEDIMENT BASIN/EXTENDED DETENTION FACILITY, AND ALL GRADED AREAS IN WHICH A BUILDING SLAB, CELLER/BASEMENT OR FOOTER HAS BEEN REMOVED SHALL BE CONSIDERED CRITICAL EROSION AREAS. THESE AREAS SHALL BE MONITORED DAILY AND AFTER EACH SUFFICIENT RAIN FALL. THE LOCAL GOVERNING AUTHORITY WILL HAVE THE AUTHORITY TO RECOMMEND THE PLACEMENT OF ADDITIONAL EROSION CONTROL MEASURES IN THIS AREA IF IT BECOMES EVIDENT DURING CONSTRUCTION THAT THE ONES IN PLACE ARE NOT FUNCTIONING SUFFICIENTLY.

EROSION AND SEDIMENT CONTROL MEASURES
UNLESS OTHERWISE INDICATED, ALL VEGETATIVE AND STRUCTURAL EROSION AND SEDIMENT CONTROL PRACTICES SHALL BE CONSTRUCTED AND MAINTAINED ACCORDING TO MINIMUM STANDARDS AND SPECIFICATIONS OF THE VIRGINIA EROSION AND SEDIMENT CONTROL HANDBOOK AND CITY OF HARRISONBURG DESIGN AND CONSTRUCTION MANUAL. THE MINIMUM STANDARDS OF THE VESCH SHALL BE ADHERED TO UNLESS OTHERWISE WAIVED OR APPROVED BY A VARIANCE.

STRUCTURAL PRACTICES
- CONSTRUCTION ENTRANCE (3.02): A STABILIZED STONE PAD WITH A FILTER FABRIC UNDERLINER LOCATED AT POINTS OF VEHICULAR INGRESS AND EGRESS ON A CONSTRUCTION SITE.
STRAW BALE BARRIER (3.04): A TEMPORARY SEDIMENT BARRIER COMPOSED OF STRAW BALES PLACED ACROSS OR AT THE TOW OF A SLOPE TO INTERCEPT AND DETAIN SEDIMENT AND DECREASE FLOW VELOCITIES FROM DRAINAGE AREAS OF LIMITED SIZE.
- SILT FENCE (3.05):A TEMPORARY SEDIMENT BARRIER CONSISTING OF A SYNTHETIC FILTER FABRIC STRETCHED ACROSS AND ATTACHED TO SUPPORTING POSTS AND ENTRENCHED.
- STORM DRAIN INLET PROTECTION (3.07): A SEDIMENT FILTER OR AN EXCAVATED IMPOUNDING AREA AROUND A STORM DRAIN DROP INLET OR CURB INLET.
-TEMPORARY DIVERSION DIKE (3.09): A RIDGE OF COMPACTED SOIL CONSTRUCTED AT THE TOP OR BASE OF A SLOPING DISTURBED AREA WHICH DIVERTS OFF-SITE RUNOFF AWAY FROM UNPROTECTED SLOPES AND TO A STABILIZED OUTLET, OR TO DIVERT SEDIMENT-LADIN RUNOFF TO A SEDIMENT-TRAPPING STRUCTURE. MAXIMUM EFFECTIVE LIFE IS 18 MONTHS.
- TEMPORARY SEDIMENT BASIN (3.14): A TEMPORARY BARRIER OR DAM WITH A CONTROLLED STORMWATER RELEASE STRUCTURE FORMED BY CONSTRUCTING AN EMBANKMENT OF COMPACTED SOIL ACROSS A DRAINAGE WAY.
- STORMWATER CONVEYANCE CHANNEL (3.17): A PERMANENT CHANNEL DESIGNED TO CARRY CONCENTRATED FLOWS WITHOUT EROSION.
- OUTLET PROTECTION (3.18): THE INSTALLATION OF RIPRAP CHANNEL SECTIONS AND/OR STILLING BASINS BELOW STORM DRAIN OUTLETS TO REDUCE EROSION AND UNDER-CUTTING FROM SCOURING AT OUTLETS AND TO REDUCE FLOW VELOCITIES BEFORE STORMWATER ENTERS RECEIVING CHANNELS BELOW THESE OUTLETS.
- SURFACE ROUGHENING (3.29): GRADING PRACTICES SUCH AS STAIR-STEPPING OR GROOVING SLOPES OR LEAVING SLOPES IN A ROUGHENED CONDITION BY NOT FINE-GRADING THEM. REDUCES RUNOFF VELOCITY, PROVIDES SEDIMENT TRAPPING, AND INCREASES INFILTRATION, ALL OF WHICH FACILITATE ESTABLISHMENT OF VEGETATION ON EXPOSED SLOPES. APPLICABLE TO ALL SLOPES STEEPER THAN 3:1 OR HAVE RECEIVED FINAL GRADING BUT WILL NOT BE STABILIZED IMMEDIATELY. ALSO RECOMMENDED FOR OTHER EXPOSED SLOPES WITH FLATTER GRADES.

EROSION AND SEDIMENT CONTROL NARRATIVE (cont.)

VEGETATIVE PRACTICES
-TOP SOILING (3.30): TOPSOIL WILL BE STRIPPED FROM THE SITE AND STOCKPILED IN AN AREA DETERMINED IN THE FIELD. UPON THE COMPLETION OF THE PROJECT TOPSOIL WILL BE PLACED ON ALL DISTURBED AREAS AT A MINIMUM DEPTH OF 6 INCHES.
-TEMPORARY SEEDING (3.31): ALL DENUDED AREAS LEFT DORMANT FOR MORE THAN 14 DAYS SHALL BE SEEDED WITH A FAST GERMINATING TEMPORARY VEGETATION.
-TEMPORARY VEGETATION: THE TIME OF YEAR WILL BE THE BASIS FOR THE SEED MIXTURE.
-PERMANENT SEEDING (3.32): ALL SEEDED AREAS WILL BE RESEEDED, MULCHED AND FERTILIZED AS NEEDED TO OBTAIN AN ADEQUATE STAND OF GRASS AS SOON AS POSSIBLE AFTER FINAL GRADING OPERATIONS.
- MULCHING (3.35): APPLICATION OF PLANT RESIDUES OR OTHER SUITABLE MATERIALS TO DISTURBED SURFACES TO PREVENT EROSION AND REDUCE OVERLAND FLOW VELOCITIES, FOSTERS PLAN GROWTH BY INCREASING AVAILABLE MOISTURE AND PROVIDING INSULATION AGAINST EXTREME HEAR OR COLD. SHOULD BE APPLIED TO ALL SEEDING OPERATIONS, OTHER PLANT MATERIALS WHICH DO NOT PROVIDE ADEQUATE SOIL PROTECTION BY THEMSELVES, AND BASE AREAS WHICH CANNOT BE SEEDED DUE TO THE SEASON BUT WHICH STILL NEED PROTECTION TO PREVENT SOIL LOSS.
- SOIL STABILIZATION BLANKETS & MATTING (3.36): THE INSTALLATION OF A PROTECTIVE BLANKET (TREATMENT 1) OR A SOIL STABILIZATION MAT (TREATMENT 2) ON A PREPARED PLANTING OF A STEEP SLOPE, CHANNEL OR SHORELINE.
- TREES, SHRUBS, VINES, AND GROUND COVERS (3.37): STABILIZING DISTURBED AREAS BY PLANTING TREES, SHRUBS, VINES, AND GROUND COVERS WHERE TURF IS NOT PREFERRED. THESE PLANT MATERIALS ALSO PROVIDE FOOD AND SHELTER FOR WILDLIFE AS WELL AS MANY OTHER ENVIRONMENTAL BENEFITS. ESPECIALLY EFFECTIVE WHERE ORNAMENTAL PLANTS ARE DESIRABLE AND TURF MAINTENANCE IS DIFFICULT.
- DUST CONTROL (3.39): REDUCING SURFACE AND AIR MOVEMENT OF DUST DURING LAND DISTURBANCE, DEMOLITION OR CONSTRUCTION ACTIVITIES IN AREAS SUBJECT TO DUST PROBLEMS IN ORDER TO PREVENT SOIL LOSS AND REDUCE THE PRESENCE OF POTENTIALLY HARMFUL AIRBORNE SUBSTANCE.

MANAGEMENT STRATEGIES
CONSTRUCTION WILL BE SEQUENCED SO THAT GRADING OPERATIONS WILL BEGIN AND END AS SOON AS POSSIBLE. THE JOB SUPERINTENDENT SHALL BE RESPONSIBLE FOR THE INSTALLATION AND MAINTENANCE OF ALL EROSION AND SEDIMENT CONTROL MEASURES. AFTER ACHIEVING ADEQUATE STABILIZATION, AND IN THE OPINION OF THE LOCAL ADMINISTRATOR, THE TEMPORARY EROSION AND SEDIMENT CONTROLS SHALL BE REMOVED AND ANY AREAS DISTURBED DURING THIS PROCESS SHALL BE STABILIZED.

PERMANENT STABILIZATION
ALL AREAS LEFT UNCOVERED BY EITHER BUILDINGS OR PAVEMENT SHALL BE STABILIZED WITH PERMANENT SEEDING IMMEDIATELY FOLLOWING FINISH GRADING. SEEDING SHALL BE DONE IN ACCORDANCE WITH THE VESCH. ANY ALTERATIONS FROM THIS DOCUMENT SHALL BE APPROVED BY THE LOCAL EROSION CONTROL ADMINISTRATOR. ALL AREAS EITHER TEMPORARILY OR PERMANENTLY SEEDED NEED TO BE MULCHED AND WATERED REGULARLY TO ACHIEVE, IN THE PROGRAM ADMINISTRATOR'S OPINION, AN ADEQUATE STAND OF VEGETATION.

STORM WATER MANAGEMENT
ALL STORMWATER MANAGEMENT SHALL BE IN ACCORDANCE WITH THE CURRENT RUNOFF REDUCTION METHOD. A PORTION OF THIS SITE'S STORMWATER WILL BE CONVEYED THROUGH A PRIVATE STORM SEWER (CAPACITY/ADEQUATE CHANNEL VERIFIED) AND A GRASS CHANNEL TO BLACKS RUN, A FEDERALLY REGULATED FLOODPLAIN. THE FLOW FROM THE PROPOSED BUILDING WILL BE CAPTURED AND DIRECTED TO A RAINWATER HARVESTING SYSTEM. WATER QUALITY CALCULATIONS HAVE BEEN PREPARED PER THE VIRGINIA RUNOFF REDUCTION REDEVELOPMENT SPREADSHEET COMPARING THE EXISTING SITE TO POST-DEVELOPED CONDITIONS AFTER THE PROJECT IS COMPLETE. AS SUCH, 1.39 LBS/AC.-YEAR OF PHOSPHORUS REMOVAL WILL BE REQUIRED. THE PROPOSED GRASS CHANNEL AND RAINWATER HARVESTING SYSTEM CAPTURE 1.48 LBS OF PHOSPHATE WHICH IS GREATER THAN THE AMOUNT REQUIRED.

CHANNEL PROTECTION WAS EVALUATED TO A POINT (BLACK'S RUN) SUCH THAT THE AREA OF THE SUBJECT SITE IS LESS THAN OR EQUAL TO 1% OF THE TOTAL WATERSHED AREA. FLOOD PROTECTION IS VERIFIED BY APPLYING CODE OF VIRGINIA 9VAC24-870-66-C1 AND CHANNEL PROTECTION IS VERIFIED BY APPLYING CODE OF VIRGINIA 9VAC25-870-66B1A.

A PORTION OF THE SITE WILL FLOW OVERLAND INTO AN EXTENDED DETENTION FACILITY, LEVEL 1. A FOREBAY AND THE REQUIRED STORAGE VOLUMES HAVE BEEN PROVIDED PER APPLICABLE REGULATIONS. THIS FACILITY WILL BE CONSTRUCTED AS A SEDIMENT BASIN TO PROVIDE EROSION CONTROL FOR THE SITE DURING CONSTRUCTION, AND ONLY AFTER THE SITE HAS B

CONSTRUCTION SEQUENCE

1. INSTALL CONSTRUCTION ENTRANCE, 6.0' VINYL PRIVACY FENCE, AND PERIMETER E&S CONTROLS AS THE FIRST STEP IN PHASE I OF GRADING ACTIVITIES.
2. INSTALL TEMPORARY SEDIMENT BASIN AS SPECIFIED ON THE PLANS.
3. GRADE THE SITE AS SHOWN ON THE PHASE II E&S PLAN. ADJUST E&S CONTROLS AS GRADING PROGRESSES.
4. AS PORTIONS OF THE SITE GRADING ARE COMPLETED INSTALL PERMANENT SEEDING AND MULCH.
5. INSTALL THE INLET PROTECTION AS SHOWN ON THE E&S PLAN IMMEDIATELY FOLLOWING THE INSTALLATION OF EACH INLET.
6. ONCE THE CONTRIBUTING DRAINAGE AREAS ARE STABILIZED, INSTALL THE STORMWATER MANAGEMENT BMPS AS SHOWN ON THE STORMWATER MANAGEMENT PLANS.
7. ALL TEMPORARY EROSION AND SEDIMENT CONTROL MEASURES SHALL BE REMOVED WITHIN 30 DAYS AFTER FINAL SITE STABILIZATION IN THE OPINION OF THE LOCAL E&S ADMINISTRATOR. TRAPPED SEDIMENT AND THE DISTURBED SOIL AREAS RESULTING FROM DISPOSITION OF TEMPORARY MEASURES SHALL BE PERMANENTLY STABILIZED TO PREVENT FURTHER EROSION AND SEDIMENTATION.
8. UPON THE COMPLETION OF THE FINAL STABILIZATION, AS APPROVED BY THE CITY OF HARRISONBURG, REMOVE ALL DEPOSITED MATERIAL WITHIN THE SEDIMENT BASIN AND STABILIZE THE INTERIOR OF THE BASIN ITSELF. UPON FINAL STABILIZATION OF THE BASIN, REMOVE THE EROSION CONTROL FEATURES ON THE RISER AND PATCH HOLES TO PROHIBIT FLOW INTO THAT ORIFICE. ALSO, INSTALL THE 3' DIAMETER ORIFICE AS DEFINED WITHIN THE STORMWATER MANAGEMENT PLAN CONTAINED HEREIN.

EROSION CONTROL LEGEND

CE	CONSTRUCTION ENTRANCE (3.02)
SF	SILT FENCE (3.05)
SB	TEMPORARY SEDIMENT BASIN (3.14)
TO	TOP SOILING (3.30)
TS	TEMPORARY SEEDING (3.31)
PS	PERMANENT SEEDING (3.32)
MU	MULCHING (3.35)
OP	OUTLET PROTECTION (3.18)
CD	ROCK CHECK DAM (3.20)
IP	INLET PROTECTION (3.07)
CRS	CONSTRUCTION ROAD STABILIZATION (3.03)
DD	TEMPORARY DIVERSION DIKE (3.09)

NOTE:
PROVIDE DUST CONTROL AS REQUIRED DURING CONSTRUCTION ACTIVITIES

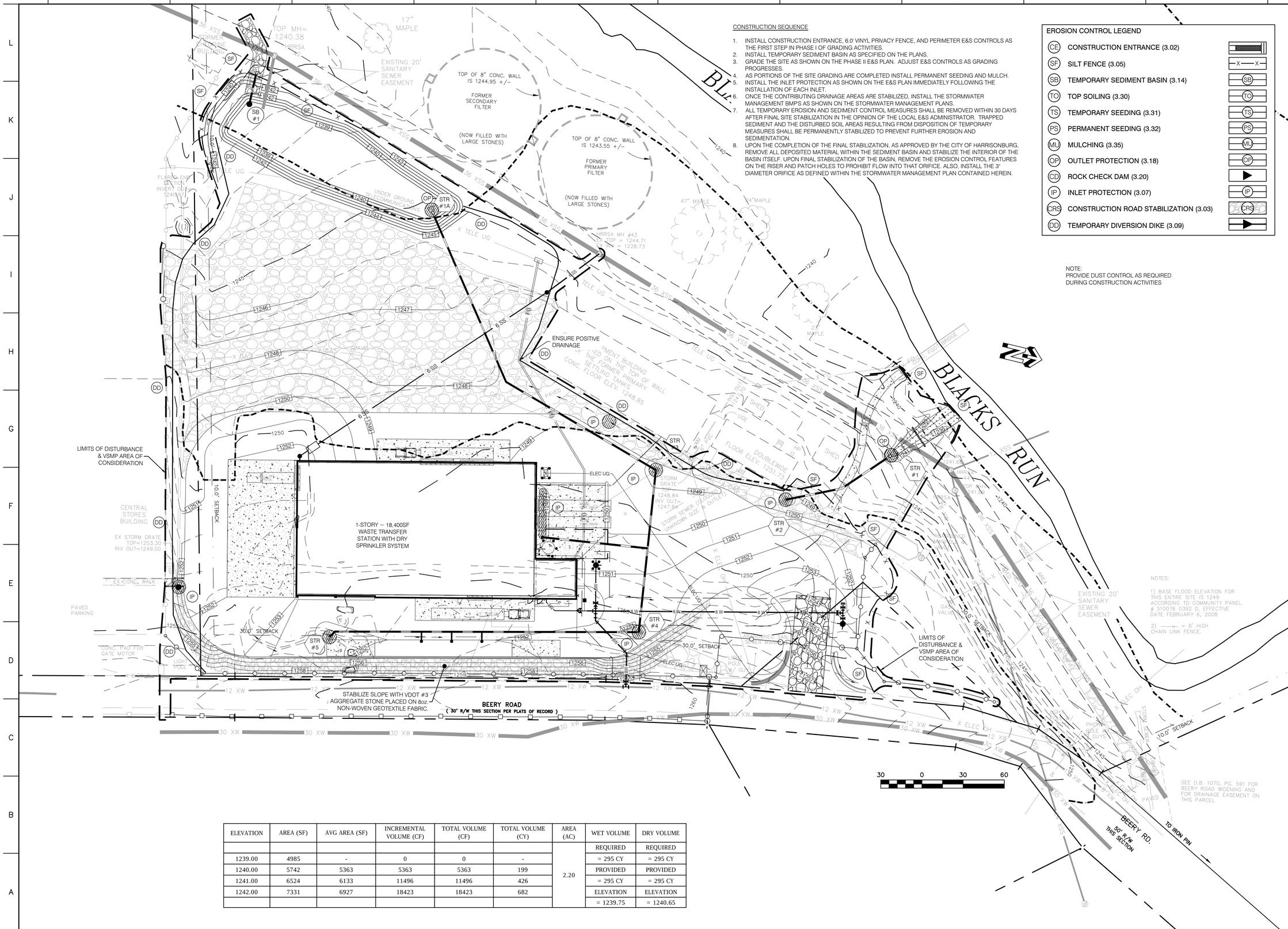

NOTES:

1) BASE FLOOD ELEVATION FOR THIS ENTIRE SITE IS 1249 ACCORDING TO COMMUNITY PANEL # 510076 0392 D, EFFECTIVE DATE FEBRUARY 6, 2008

2) —o— = 6' HIGH CHAIN LINK FENCE.

SEE D.B. 1070, PG. 591 FOR BEERY ROAD WIDENING AND FOR DRAINAGE EASEMENT ON THIS PARCEL

ELEVATION	AREA (SF)	AVG AREA (SF)	INCREMENTAL VOLUME (CF)	TOTAL VOLUME (CF)	TOTAL VOLUME (CY)	AREA (AC)	WET VOLUME	DRY VOLUME
						2.20	REQUIRED	REQUIRED
1239.00	4985	-	0	0	-		= 295 CY	= 295 CY
1240.00	5742	5363	5363	5363	199		PROVIDED	PROVIDED
1241.00	6524	6133	11496	11496	426		= 295 CY	= 295 CY
1242.00	7331	6927	18423	18423	682		ELEVATION	ELEVATION
							= 1239.75	= 1240.65

CITY OF HARRISONBURG

SOLID WASTE TRANSFER STATION 2055 BERRY ROAD

HARRISONBURG, VA

VALLEY | ENGINEERING
IDEAS MADE REAL
3231 PEOPLES DRIVE
HARRISONBURG, VIRGINIA 22801
TELEPHONE (540) 434-6365 OR (800) 343-6365
FAX (540) 432-0506
www.valleyesp.com

COPYRIGHT HELD BY VALLEY ENGINEERING, P.C. ALL RIGHTS RESERVED. THESE DRAWINGS MAY NOT BE REPRODUCED IN ANY FORM WITHOUT WRITTEN PERMISSION BY VALLEY ENGINEERING, P.C.

COMMONWEALTH OF VIRGINIA
DANIEL K. MICHAELI
Lic. No. 028947
10-11-16
PROFESSIONAL ENGINEER

BID SET

REVISIONS:
08/17/2016 - CITY COMMENTS
10/04/2016 - PER CITY COMMENTS

DATE: 7/13/2016

PROJECT No.: 10921-2

EXP./CLIENT No.: 10921-2

SCALE: TBLKSCALE

EROSION & SEDIMENT CONTROL PLAN

SHEET NO.:
C3.02

STONE CONSTRUCTION ENTRANCE

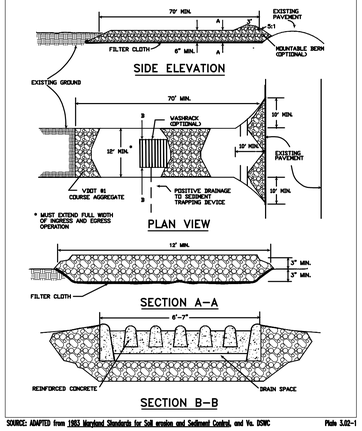

SOURCE: ADAPTED from 1983 Maryland Standards for Soil erosion and Sediment Control, and Va. DSWC — Plate 3.02-1

CONSTRUCTION OF A SILT FENCE (WITHOUT WIRE SUPPORT)

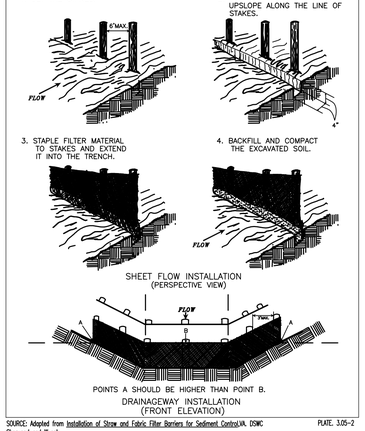

SOURCE: Adapted from Installation of Straw and Fabric Filter Barriers for Sediment Control,VA. DSWC Sherwood and Wyant — PLATE. 3.05-2

SEDIMENT BASIN SCHEMATIC ELEVATIONS

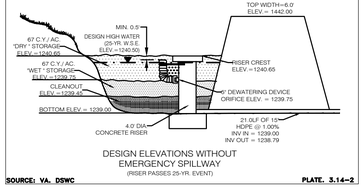

DESIGN ELEVATIONS WITHOUT EMERGENCY SPILLWAY
(RISER PASSES 25-YR. EVENT)

SOURCE: VA. DSWC — PLATE. 3.14-2

RECOMMENDED DEWATERING SYSTEM FOR SEDIMENT BASIN #3

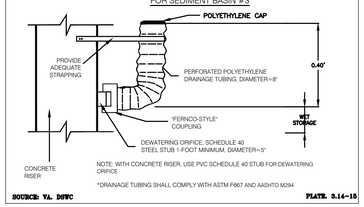

SOURCE: VA. DSWC — PLATE. 3.14-15

TEMPORARY DIVERSION DIKE

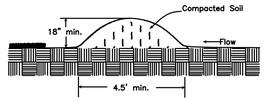

NOTE: THE EARTHEN BERM SHALL BE STABILIZED WITH SEEDING IMMEDIATELY UPON CONSTRUCTION COMPLETION OF THE BERM.

SOURCE: VA. DSWC — PLATE 3.09-1

GRAVEL AND WIRE MESH DROP INLET SEDIMENT FILTER

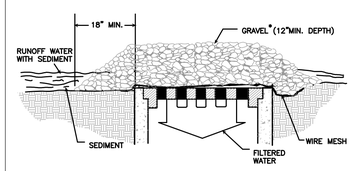

SPECIFIC APPLICATION

THIS METHOD OF INLET PROTECTION IS APPLICABLE WHERE HEAVY CONCENTRATED FLOWS ARE EXPECTED BUT NOT WHERE PONDING AROUND THE STRUCTURE MIGHT CAUSE EXCESSIVE INCONVENIENCE OR DAMAGE TO ADJACENT STRUCTURES AND UNPROTECTED AREAS.

* GRAVEL SHALL BE VDOT #3, #357 OR #5 COARSE AGGREGATE.

SOURCE: VA. DSWC — PLATE. 3.07-2

PIPE OUTLET CONDITIONS

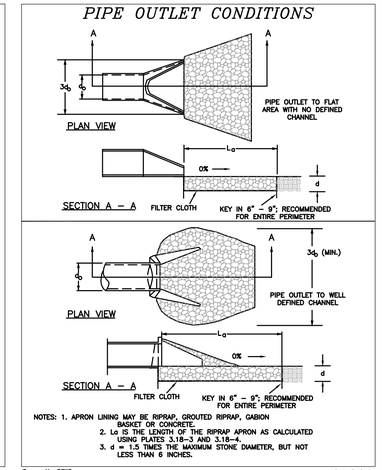

NOTES: 1. APRON LINING MAY BE RIPRAP, GROUTED RIPRAP, GABION BASKET OR CONCRETE.
2. L_a IS THE LENGTH OF THE RIPRAP APRON AS CALCULATED USING PLATES 3.18-3 AND 3.18-4.
3. d = 1.5 TIMES THE MAXIMUM STONE DIAMETER, BUT NOT LESS THAN 6 INCHES.

Source: Va. DSWC — Plate 3.18-1

TEMPORARY SEEDING

PLANTING DATES:	SPECIES	RATE IN LBS. PER ACRE
SEPT. 1 - FEB. 15		50 -100 lbs. / acre
	ANNUAL RYEGRASS (LOLIUM MULTI-FLORUM)	50%
	CEREAL (WINTER) RYE (SECALE CEREALE)	50%
FEB. 16 - APR. 30		60 - 100lbs. / acre
	ANNUAL RYEGRASS (LULIUM MULTI-FLORUM)	100%
MAY 1 - AUG. 31		50lbs. / acre
	GERMAN MILLET (SETARIA ITALICA)	100%

PERMANENT SEEDING

MINIMUM CARE LAWN	(COMMERCIAL OR RESIDENTIAL)	200-250 lbs. / acre
	KENTUCKY 31 OR TURF-TYPE TALL FESCUE	90-100%
	IMPROVED PERENNIAL RYEGRASS	0-10%
	KENTUCKY BLUEGRASS	0-10%
HIGH-MAINTENANCE LAWN		125 lbs. / acre
	MINIMUM OF THREE (3) MAXIMUM OF FIVE (5) VARIETIES OF BLUEGRASS FROM APPROVED LIST FOR USE IN VIRGINIA	
GENERAL SLOPE (3:1 OR LESS)		150 lbs. / acre
	KENTUCKY 31 FESCUE	85%
	RED TOP GRASS	3%
	SEASONAL NURSE CROP**	12%
GENERAL SLOPE (STEEPER THAN 3:1)		150 lbs. / acre
	KENTUCKY 31 FESCUE	70%
	RED TOP GRASS	3%
	SEASONAL NURSE CROP**	13%
	CROWNVETCH****	14%

** SEASONAL NURSE CROP TO BE SELECTED ACCORDING TO TIME OF YEAR WHEN SOWING WILL OCCUR. SEED WILL HAVE SHORT GERMINATION PERIOD FOR WEED AND EROSION CONTROL.
**** IF FLATPEA IS USED, INCREASE TO 30 lbs. / acre. ALL LEGUME SEED MUST BE PROPERLY INOCULATED. WEEPING LOVEGRASS MAY ALSO BE INCLUDED IN ANY SLOPE OR LOW-MAINTENANCE MIXTURE DURING WARMER SEEDING PERIODS. ADD 10 - 20lbs. / acre IN MIXES.

DUST CONTROL MEASURES

THE CONTRACTOR SHALL USE SPRAY – ON ADHESIVES IN ADDITION TO THE OTHER STABILIZATION METHODS AS SPECIFIED ON THESE PLANS. TO CONTROL DUST DURING CONSTRUCTION THE FOLLOWING SPECIFICATIONS SHALL BE USED WHEN FOUND NECESSARY: (CHOOSE 1 METHOD)

ADHESIVE EMULSION	WATER DILUTION	NOZZLE TYPE	APPLICATION RATE (GAL. / AC.)
ANIONIC ASPHALT	7:1	COARSE	1200
LATEX	12.5:1	FINE	235
RESIN–IN–WATER	4:1	FINE	300

TABLE 3.35-A

ORGANIC MULCH MATERIALS AND APPLICATION RATES

MULCHES:	RATES: Per Acre	RATES: Per 1000 sq. ft.	NOTES:
Straw or Hay	1 1/2 - 2 tons (minimum 2 tons for winter cover)	70 - 90 lbs.	Free from weeds and coarse matter. Must be anchored. Spread with mulch blower or by hand.
Fiber Mulch	Minimum 1500 lbs.	35 lbs.	Do not use as mulch for winter cover or during hot, dry periods.* Apply as slurry.
Corn Stalks	4 - 6 tons	185 - 275 lbs.	Cut or shredded in 4 - 6" lengths. Air-dried. Do not use in fine turf areas. Apply with mulch blower or by hand.
Wood Chips	4 - 6 tons	185 - 275 lbs.	Free of coarse matter. Air-dried. Treat with 12 lbs nitrogen per ton. Do not use in fine turf areas. Apply with mulch blower, chip handler, or by hand.
Bark Chips or Shredded Bark	50 - 70 cu. yds.	1 - 2 cu. yds.	Free of coarse matter. Air-dried. Do not use in fine turf areas. Apply with mulch blower, chip handler, or by hand.

* When fiber mulch is the only available mulch during periods when straw should be used, apply at a minimum rate of 2000 lbs./ac. or 45 lbs./1000 sq. ft.

TABLE 3.32-F

LBS. OF GROUND AGRICULTURAL LIMESTONE* PER THOUSAND SQUARE FEET NEEDED TO CORRECT pH LEVEL OF ACID SOILS TO 6.5

Existing pH	Soil Texture: Sandy Loam	Loam	Clay Loam
6.2	20	35	40
6.0	40	55	70
5.8	55	65	85
5.6	70	80	105
5.4	90	100	125
5.2	105	120	140
5.0	120	140	160
4.8	125	180	205
4.6	155	210	230
4.0	200	250	300

* Lime should always be applied in accordance with the results of a soil test, such as may be obtained through the soil testing laboratory at VPI&SU or through a reputable commercial laboratory.

CITY OF HARRISONBURG
SOLID WASTE TRANSFER STATION
2055 BERRY ROAD
HARRISONBURG, VA

VALLEY | ENGINEERING
IDEAS MADE REAL
3231 PEOPLES DRIVE
HARRISONBURG, VIRGINIA 22801
TELEPHONE (540) 434-5445 (800) 343-6365
FAX (540) 432-0685
www.valleyesp.com

COPYRIGHT HELD BY VALLEY ENGINEERING, P.C. ALL RIGHTS RESERVED. THESE DRAWINGS MAY NOT BE REPRODUCED IN WHOLE OR IN PART WITHOUT WRITTEN PERMISSION OF VALLEY ENGINEERING, P.C.

COMMONWEALTH OF VIRGINIA
DANIEL K. MICHAELA
Lic. No. 028947
PROFESSIONAL ENGINEER
10-11-16

BID SET

REVISIONS:
08/17/2016 - CITY COMMENTS
10/04/2016 - PER CITY COMMENTS

DATE: 7/13/2016
PROJECT No.: 10921-2
EXP./CLIENT No.: 10921-2
SCALE: TBLKSCALE

EROSION & SEDIMENT CONTROL DETAILS

SHEET NO.:
C3.03

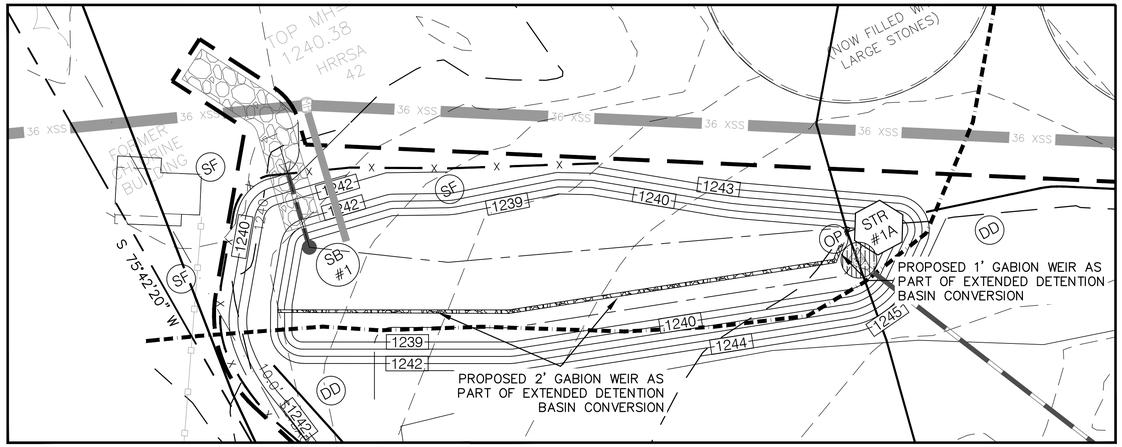

City of Harrisonburg, VA

Design & Construction Standards Manual

Appendix J

Stormwater BMP Post-Construction Inspection Policy

Property owners are expected to maintain all stormwater BMPs in good working condition, functional per original design intent. Owners should seek out the assistance of landscape, engineering and biology professionals as appropriate to assess the condition and function of BMPs. Owners are encouraged to establish a regular program for such maintenance, based on specific needs for specific facilities. This may help to avoid costly repairs that could have been avoided by consistent, regular maintenance.

Owner is cautioned that the function of certain BMPs may be dependent upon other features of the original site design. For example, changes to ground character from re-grading, added impervious areas, redirection of roof runoff, etc. may change the effectiveness of the original stormwater facilities.

As outlined in the Stormwater Management BMP Facilities Maintenance Agreement, the property owner is responsible for conducting regular inspections of their BMP(s) every five years and submitting a report to the Department of Community Development. Inspection forms to be used are those in Appendix 'K' of the VA Stormwater Management Handbook.

The reports shall be submitted to the Department of Community Development by July 1 of the inspection year, no earlier than 60 days prior. A separate report is required for each BMP covered under the project's approved Stormwater Management Plan.

Every five years, the property owner will be required to have a professional engineer certify that the BMP is functioning properly and as designed. The professional engineer shall submit the Inspection Form and use it as guidance, but it is expected that a complete inspection of the stormwater BMPs' condition be conducted. This should include assessment of underground systems, filter media, infiltration capabilities, vegetation condition and coverage, etc. A supplemental narrative may be necessary to complete a full assessment.

Should either the owner's or engineer's inspection find that maintenance is needed, the property owner will have 60 days from the date of inspection to complete maintenance and inform the Department of Community Development that work is complete and a re-inspection may be needed. Additional time may be granted by the Director of Community Development or designee on a case-by-case basis per the terms of the BMP Maintenance Agreement.

City staff may conduct "spot" checks of stormwater BMP's to ensure compliance. Should a BMP be found by to require maintenance, a letter will be sent to the property owner and follow up will be requested. The letter will detail the deficiencies found. Should the property owner fail to maintain the Stormwater BMP, enforcement actions may be taken by the City of Harrisonburg per the terms of the BMP Maintenance Agreement.

NOTES:
- BMP MAINTENANCE AND REPORTING SHALL BE THE RESPONSIBILITY OF THE OWNER THROUGHOUT CONSTRUCTION.
- OWNER TO ENTER INTO, AND RECORD, A BMP MAINTENANCE AGREEMENT WITH THE CITY OF HARRISONBURG PRIOR TO ISSUANCE OF THE REQUIRED LAND DISTURBANCE PERMIT.

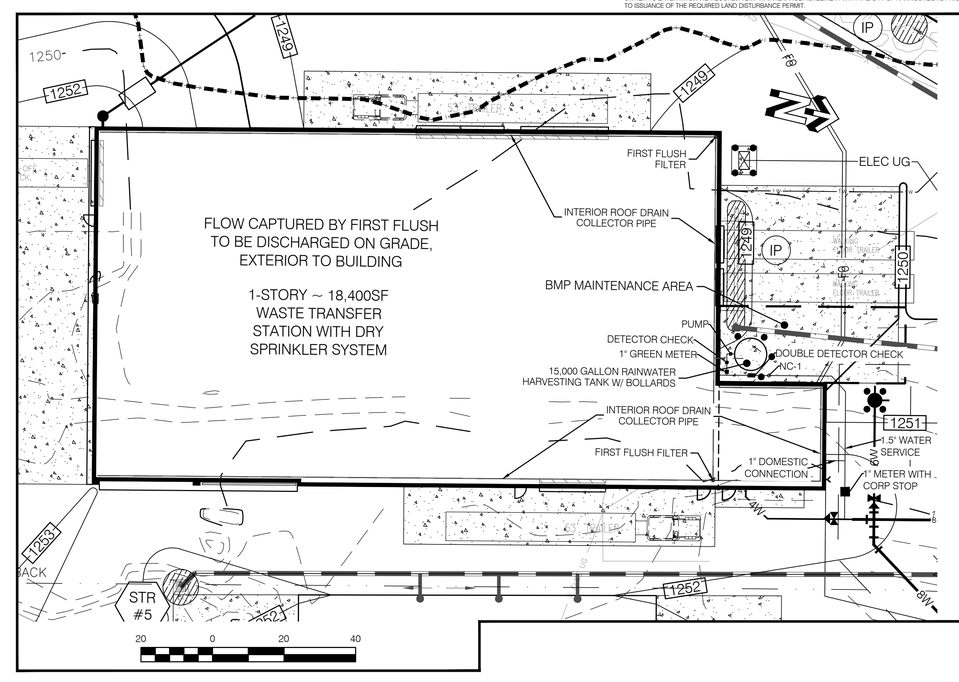

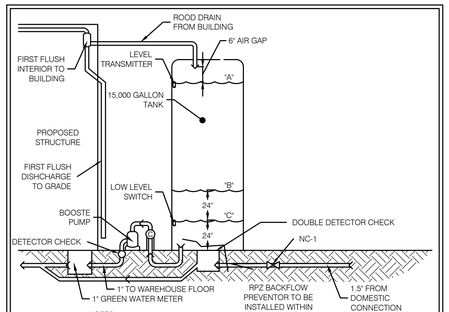

NOTES:
- LEVEL TRANSMITTER CONTROLS VALVE 1. VALVE 1 OPENS AND FILLS TANK WITH MUNICIPAL WATER IF RAINWATER IS UNAVAILABLE AND WATER REACHES LEVEL "B". VALVE 1 CLOSES WHEN WATER REACHES LEVEL "A".
- LOW LEVEL SWITCH OPENS VALVE 1 AT LEVEL "C" AS BACKUP FOR LEVEL TRANSMITTER
- FINAL DESIGN OF RAINWATER HARVESTING SYSTEM BY MEP DESIGN FIRM.
- PROVIDE OVERFLOW FOR TANK WHICH DISCHARGES DIRECTLY TO CONCRETE PAD TO AVOID EROSION CONCERNS.

RAINWATER HARVESTING SYSTEM SCHEMATIC DETAIL
N.T.S.

THE CITY OF HARRISONBURG, VIRGINIA — DESIGN & CONSTRUCTION STANDARD

BMP AS-BUILT CERTIFICATION

Project Name (as it appears on approved plans): _____

As-Built conditions field verified on: _____

Certification Statement:

Based upon construction-period and post-construction observation of project BMPs, as listed in the attached BMP Table of the above named project, I certify that all structural and non-structural stormwater management BMP facilities are in general conformance with the requirements and specifications of the facility as described in the approved construction drawings, approved design documents, manufacturers installation instructions and/or any approved modifications, and that the facilities should function as intended by the original design. Further, I have observed the stormwater runoff patterns on the site, including the disposition of roof drainage, and it appears that drainage areas to constructed BMPs are in general conformance with the approved plans.

The attached, sealed Record Drawings reflect the final, installed BMPs, and are adequately marked or edited to show any deviations from the approved plans. I further certify that the Owner/Developer has been provided a copy of these Record Drawings and has been advised of his/her/their responsibility to transfer such drawings to the party responsible for BMP maintenance per the BMP Maintenance Agreement.

Signature: _____

Print Name: _____

Seal — Date: _____

Note: This certification statement must be executed by a registered professional engineer with experience in the design and construction or operation of stormwater BMPs of a nature similar in scope to that certified to in this certification. Engineer is advised to consult the Virginia Stormwater Management Handbook for as-built inspection checklists on various facilities.

REVISIONS				DWG. NO.
NO.	DATE	DESCRIPTION	INIT.	2.5.4.1
1	7/1/14	Add record dwg req'ts.	DR	PAGE

BMP AS-BUILT INSPECTION CERTIFICATION

NOTE:
THE BOND WILL NOT BE RELEASED UNTIL THE BMP AS-BUILT CERTIFICATION, DWG. NO. 2.5.4.1, HAS BEEN SUBMITTED.

THE CITY OF HARRISONBURG, VIRGINIA — DESIGN & CONSTRUCTION STANDARD

Project Name: _____

BMP TABLE

Type (see below)	Design Level (1 or 2)	Ac. Treated	HUC
RAINWATER HARVESTING	1	0.42	PS22
EXTENDED DETENTION BASIN	1	2.20	PS22

Pollutant Removal Achieved (lb/yr.)	(P) 1.48	N	X.XX
Pollutant Removal Required (lb/yr.)	P 1.39	-----	N/A -----
Excess Pollutant Removal (if any) (lb/yr.)	P 0.09	-----	N/A -----

Types (per Virginia BMP Clearinghouse):
1. Rooftop Disconnection
2. Sheetflow to Veg. Filter/Open Space
3. Grass Channel
4. Soil Amendments
5. Vegetated Roof
6. Rainwater Harvesting
7. Permeable Pavement
8. Infiltration
9. Bioretention
10. Urban BioRetention
11. Dry Swale
12. Wet Swale
13. Constructed Wetland
14. Wet Pond
15. Extended Detention Pond
16. Other (list separately)

Hydrological Unit Codes (HUC):
PS22 – Blacks Run
PS23 – Cooks Creek
PS26 – Congers Creek
PS33 – Cub Run
PS06 – Linville Creek
PS09 – Dry Fork

Note: All waters above are either impaired or discharges to impaired waters.

Note: Table required for all projects with a stormwater management plan.

REVISIONS				DWG. NO.
NO.	DATE	DESCRIPTION	INIT.	2.5.1.5
1	4/29/09	Unit Codes	DLC	
2	7/1/14	Per SWM Ordinance	DR	PAGE

BMP TABLE

RAINWATER HARVESTING SYSTEM OVERVIEW

THE PROPOSED STRUCTURE WILL HAVE AN EXTERIOR ROOF GUTTER CAPTURE SYSTEM WHICH FLOWS INTO A PIPING SYSTEM WITHIN THE FACILITY ITSELF. BOTH THE LARGE WAREHOUSE FACILITY AND THE OFFICE ADDITION ROOF AREA WILL BE CAPTURED. THIS CAPTURED WATER WILL FLOW THROUGH A SERIES OF FIRST FLUSH FILTERS, ALSO PLACED WITHIN THE STRUCTURE, AND THEN EXIT THE BUILDING TO ENTER THE PROPOSED 15,000 GALLON STORAGE TANK. THIS CAPTURED WATER WILL THEN BE PUMPED BACK INTO THE WAREHOUSE SPACE AND USED TO WASH / CLEAN THE FLOOR AREA ON A DAILY BASIS. THIS WASH WATER WILL ENTER VARIOUS FLOOR DRAINS SITUATED AROUND THE FLOOR AREA, WHERE THE AREA WILL PROVIDE FOR LARGE SOLIDS TO BE CAPTURED WITHIN THE FLOOR DRAIN. THIS WATER WILL THEN LEAVE THE BUILDING AND PASS THROUGH AN OIL / WATER SEPARATOR WHICH WILL DISCHARGE INTO A SANITARY LATERAL DRAINING TO THE EXISTING HRRSA MAIN. WATER USED FROM THE COLLECTION SYSTEM WILL PASS THROUGH A GREEN METER USE TO MONITOR FLOW VOLUMES.

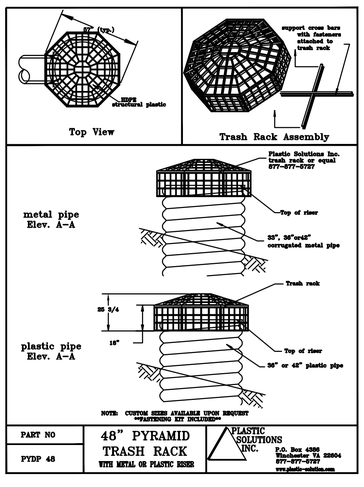

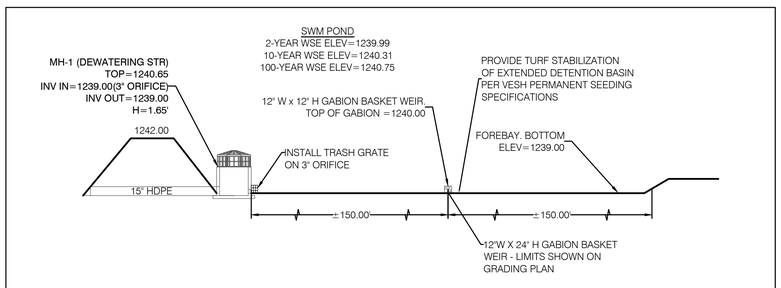

SWM POND PROFILE
SCALE: 1" = 10'

Table 6.4. Suggested Maintenance Tasks for Rainwater harvesting systems

Activity	Frequency
Keep gutters and downspouts free of leaves and other debris	O: Twice a year
Inspect and clean pre-screening devices and first flush diverters	O: Four times a year
Inspect and clean storage tank lids, paying special attention to vents and screens on inflow and outflow spigots. Check mosquito screens and patch holes or gaps immediately	O: Once a year
Inspect condition of overflow pipes, overflow filter path and/or secondary runoff reduction practices	O: Once a year
Inspect tank for sediment buildup	I: Every third year
Clear overhanging vegetation and trees over roof surface	I: Every third year
Check integrity of backflow preventer	I: Every third year
Inspect structural integrity of tank, pump, pipe and electrical system	I: Every third year
Replace damaged or defective system components	I: Every third year
Key: O = Owner I = qualified third party inspector	

VSMP CONSIDERATION AREA = 3.64 AC

IMPERVIOUS AREA FOR STORMWATER UTILITY FEE CALCULATIONS			
COMMERCIAL AREAS THAT DO NOT SHARE COMMON AREA			
-	CURRENT IMPERVIOUS (SF)	TOTAL CHANGE IN IMPERVIOUS (SF)	TOTAL IMPERVIOUS AREA AFTER CONSTRUCTION (SF)
COMMERCIAL STRUCTURES THAT DO NOT SHARE COMMON AREA	9,678	+ 8,722	18,400
ESTIMATE PRIVATE AMENITIES: PARKING LOT, WALKWAY, PATIO, OUTDOOR SEATING, ETC.	103,578	< -4,366 >	99,212

CITY OF HARRISONBURG
SOLID WASTE TRANSFER STATION
2055 BERRY ROAD
HARRISONBURG, VA

VALLEY | ENGINEERING
IDEAS MADE REAL
3231 PEOPLES DRIVE
HARRISONBURG, VIRGINIA 22801
TELEPHONE (540) 434-5965 OR (800) 343-6365
FAX (540) 432-0685
www.valleyesp.com

COPYRIGHT HELDER VALLEY ENGINEERING, P.C. ALL RIGHTS RESERVED. THESE DRAWINGS MAY NOT BE REPRODUCED IN ANY FORM WITHOUT WRITTEN PERMISSION FROM VALLEY ENGINEERING, P.C.

COMMONWEALTH OF VIRGINIA
DANIEL K. MICHAELS
Lic. No. 028947
PROFESSIONAL ENGINEER
10-11-16

BID SET

REVISIONS:
08/17/2016 - CITY COMMENTS
10/04/2016 - PER CITY COMMENTS

DATE: 7/13/2016
PROJECT No.: 10921-2
EXP./CLIENT No.: 10921-2
SCALE: TBLKSCALE

STORMWATER MANAGEMENT PLAN

SHEET NO.:
C3.04

SANITARY SEWER CONNECTION DETAIL

N.T.S.

Notes:
1. 21-B Crushed Aggregate, Base Type 1, shall be compacted to 95% of the Standard Proctor Density.
2. Subgrade shall be compacted to 95% of the Standard Proctor Density.

GRAVEL SECTION (SHADED AREA)

N.T.S.

Notes:
1. 21-B Crushed Aggregate, Base Type 1, shall be compacted to 95% of the Standard Proctor Density.
2. Subgrade shall be compacted to 95% of the Standard Proctor Density.

HEAVY DUTY PAVEMENT SECTION (SHADED AREA)

N.T.S.

CITY OF HARRISONBURG

SOLID WASTE TRANSFER STATION

2055 BERRY ROAD

HARRISONBURG, VA

VALLEY | ENGINEERING
IDEAS MADE REAL
3231 PEOPLES DRIVE
HARRISONBURG, VIRGINIA 22801
TELEPHONE (540) 434-6365 OR (800) 343-6365
FAX (540) 432-0506
www.valleyesp.com

COPYRIGHT HELD BY VALLEY ENGINEERING, P.C. ALL RIGHTS RESERVED. THESE DRAWINGS MAY NOT BE REPRODUCED IN ANY FORM WITHOUT WRITTEN PERMISSION FROM VALLEY ENGINEERING, P.C.

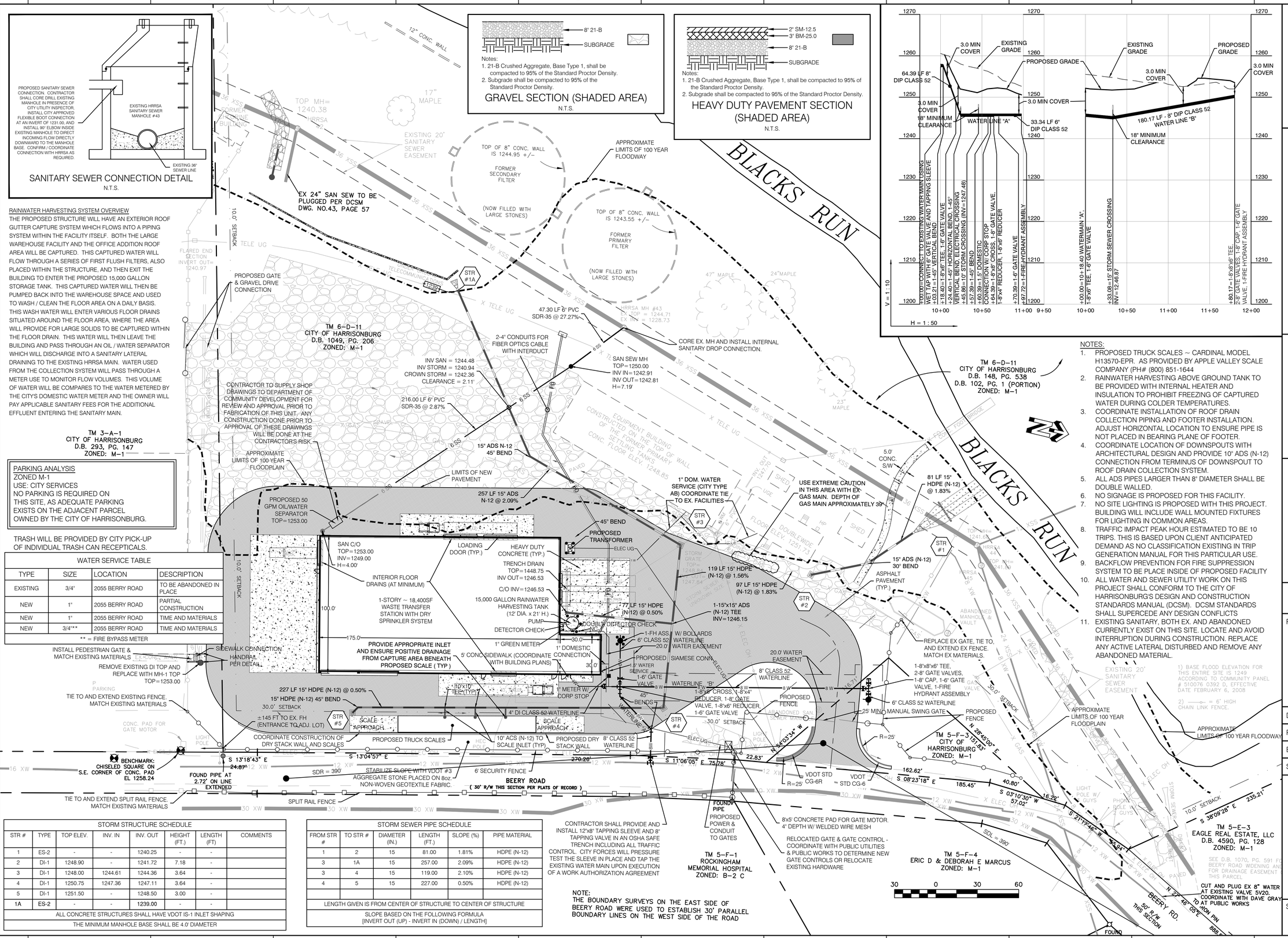

RAINWATER HARVESTING SYSTEM OVERVIEW

THE PROPOSED STRUCTURE WILL HAVE AN EXTERIOR ROOF GUTTER CAPTURE SYSTEM WHICH FLOWS INTO A PIPING SYSTEM WITHIN THE FACILITY ITSELF. BOTH THE LARGE WAREHOUSE FACILITY AND THE OFFICE ADDITION ROOF AREA WILL BE CAPTURED. THIS CAPTURED WATER WILL FLOW THROUGH A SERIES OF FIRST FLUSH FILTERS, ALSO PLACED WITHIN THE STRUCTURE, AND THEN EXIT THE BUILDING TO ENTER THE PROPOSED 15,000 GALLON STORAGE TANK. THIS CAPTURED WATER WILL THEN BE PUMPED BACK INTO THE WAREHOUSE SPACE AND USED TO WASH / CLEAN THE FLOOR AREA ON A DAILY BASIS. THIS WASH WATER WILL ENTER VARIOUS FLOOR DRAINS SITUATED AROUND THE FLOOR AREA, WHERE THE AREA WILL PROVIDE FOR LARGE SOLIDS TO BE CAPTURED WITHIN THE FLOOR DRAIN. THIS WATER WILL THEN LEAVE THE BUILDING AND PASS THROUGH AN OIL / WATER SEPARATOR WHICH WILL DISCHARGE INTO A SANITARY LATERAL DRAINING TO THE EXISTING HRRSA MAIN. WATER USED FROM THE COLLECTION SYSTEM WILL PASS THROUGH A METER USE TO MONITOR FLOW VOLUMES. THIS VOLUME OF WATER WILL BE COMPARES TO THE WATER METERED BY THE CITY'S DOMESTIC WATER METER AND THE OWNER WILL PAY APPLICABLE SANITARY FEES FOR THE ADDITIONAL EFFLUENT ENTERING THE SANITARY MAIN.

PARKING ANALYSIS
ZONED M-1
USE: CITY SERVICES
NO PARKING IS REQUIRED ON THIS SITE, AS ADEQUATE PARKING EXISTS ON THE ADJACENT PARCEL OWNED BY THE CITY OF HARRISONBURG.

TRASH WILL BE PROVIDED BY CITY PICK-UP OF INDIVIDUAL TRASH CAN RECEPTICALS.

WATER SERVICE TABLE

TYPE	SIZE	LOCATION	DESCRIPTION
EXISTING	3/4"	2055 BERRY ROAD	TO BE ABANDONED IN PLACE
NEW	1"	2055 BERRY ROAD	PARTIAL CONSTRUCTION
NEW	1"	2055 BERRY ROAD	TIME AND MATERIALS
NEW	3/4"**	2055 BERRY ROAD	TIME AND MATERIALS

** = FIRE BYPASS METER

STORM STRUCTURE SCHEDULE

STR #	TYPE	TOP ELEV.	INV. IN	INV. OUT	HEIGHT (FT.)	LENGTH (FT)	COMMENTS
1	ES-2	-	-	1240.25	-	-	
2	DI-1	1248.90	-	1241.72	7.18	-	
3	DI-1	1248.00	1244.61	1244.36	3.64	-	
4	DI-1	1250.75	1247.36	1247.11	3.64	-	
5	DI-1	1251.50	-	1248.50	3.00	-	
1A	ES-2	-	-	1239.00	-	-	

ALL CONCRETE STRUCTURES SHALL HAVE VDOT IS-1 INLET SHAPING

THE MINIMUM MANHOLE BASE SHALL BE 4.0' DIAMETER

STORM SEWER PIPE SCHEDULE

FROM STR #	TO STR #	DIAMETER (IN.)	LENGTH (FT.)	SLOPE (%)	PIPE MATERIAL
1	2	15	81.00	1.81%	HDPE (N-12)
3	1A	15	257.00	2.09%	HDPE (N-12)
3	4	15	119.00	2.10%	HDPE (N-12)
4	5	15	227.00	0.50%	HDPE (N-12)

LENGTH GIVEN IS FROM CENTER OF STRUCTURE TO CENTER OF STRUCTURE

SLOPE BASED ON THE FOLLOWING FORMULA [INVERT OUT (UP) - INVERT IN (DOWN) / LENGTH]

NOTE:
THE BOUNDARY SURVEYS ON THE EAST SIDE OF BEERY ROAD WERE USED TO ESTABLISH 30' PARALLEL BOUNDARY LINES ON THE WEST SIDE OF THE ROAD

NOTES:
1. PROPOSED TRUCK SCALES ~ CARDINAL MODEL H13570-EPR. AS PROVIDED BY APPLE VALLEY SCALE COMPANY (PH# (800) 851-1644
2. RAINWATER HARVESTING ABOVE GROUND TANK TO BE PROVIDED WITH INTERNAL HEATER AND INSULATION TO PROHIBIT FREEZING OF CAPTURED WATER DURING COLDER TEMPERATURES.
3. COORDINATE INSTALLATION OF ROOF DRAIN COLLECTION PIPING AND FOOTER INSTALLATION. ADJUST HORIZONTAL LOCATION TO ENSURE PIPE IS NOT PLACED IN BEARING PLANE OF FOOTER.
4. COORDINATE LOCATION OF DOWNSPOUTS WITH ARCHITECTURAL DESIGN AND PROVIDE 10° ADS (N-12) CONNECTION FROM TERMINUS OF DOWNSPOUT TO ROOF DRAIN COLLECTION SYSTEM.
5. ALL ADS PIPES LARGER THAN 8" DIAMETER SHALL BE DOUBLE WALLED.
6. NO SIGNAGE IS PROPOSED FOR THIS FACILITY.
7. NO SITE LIGHTING IS PROPOSED WITH THIS PROJECT. BUILDING WILL INCLUDE WALL MOUNTED FIXTURES FOR LIGHTING IN COMMON AREAS.
8. TRAFFIC IMPACT PEAK HOUR ESTIMATED TO BE 10 TRIPS. THIS IS BASED UPON CLIENT ANTICIPATED DEMAND AS NO CLASSIFICATION EXISTING IN TRIP GENERATION MANUAL FOR THIS PARTICULAR USE.
9. BACKFLOW PREVENTION FOR FIRE SUPPRESSION SYSTEM TO BE PLACE INSIDE OF PROPOSED FACILITY
10. ALL WATER AND SEWER UTILITY WORK ON THIS PROJECT SHALL CONFORM TO THE CITY OF HARRISONBURG'S DESIGN AND CONSTRUCTION STANDARDS MANUAL (DCSM). DCSM STANDARDS SHALL SUPERCEDE ANY DESIGN CONFLICTS
11. EXISTING SANITARY, BOTH EX. AND ABANDONED CURRENTLY EXIST ON THIS SITE. LOCATE AND AVOID INTERRUPTION DURING CONSTRUCTION. REPLACE ANY ACTIVE LATERAL DISTURBED AND REMOVE ANY ABANDONED MATERIAL.

COMMONWEALTH OF VIRGINIA
DANIEL K. MICHAEL
Lic. No. 028947
PROFESSIONAL ENGINEER
10-11-16

BID SET

REVISIONS:
08/17/2016 - CITY COMMENTS
10/04/2016 - PER CITY COMMENTS

DATE: 7/13/2016

PROJECT No.: 10921-2

EXP./CLIENT No.: 10921-2

SCALE: TBLKSCALE

SITE PLAN

SHEET NO.: C4.01

LANDSCAPE LEGEND

SYMBOL	PLAN NOTATION	DEFINITION
(1)	LARGE DECIDUOUS TREE (SHADE TREE)	A TREE THAT LOSES ITS FOLIAGE AT THE END OF THE GROWING SEASON, WHICH WHEN PLANTED IS FOUR (4) INCHES OR LESS IN CALIPER. THESE TREES SHALL BE AT LEAST ONE (1) INCH IN CALIPER AND BE A MINIMUM OF SIX (6) FEET IN HEIGHT. MULTI-STEM TREES SHALL ALSO BE A MINIMUM OF SIX (6) FEET IN HEIGHT.

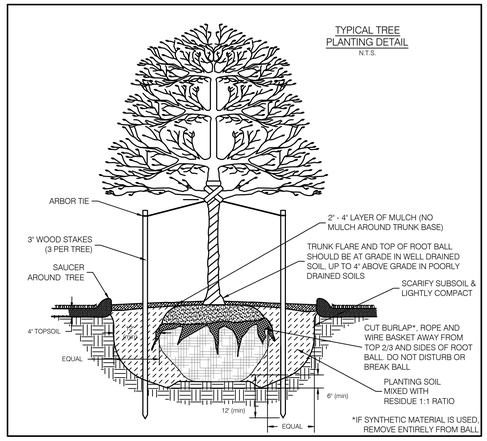

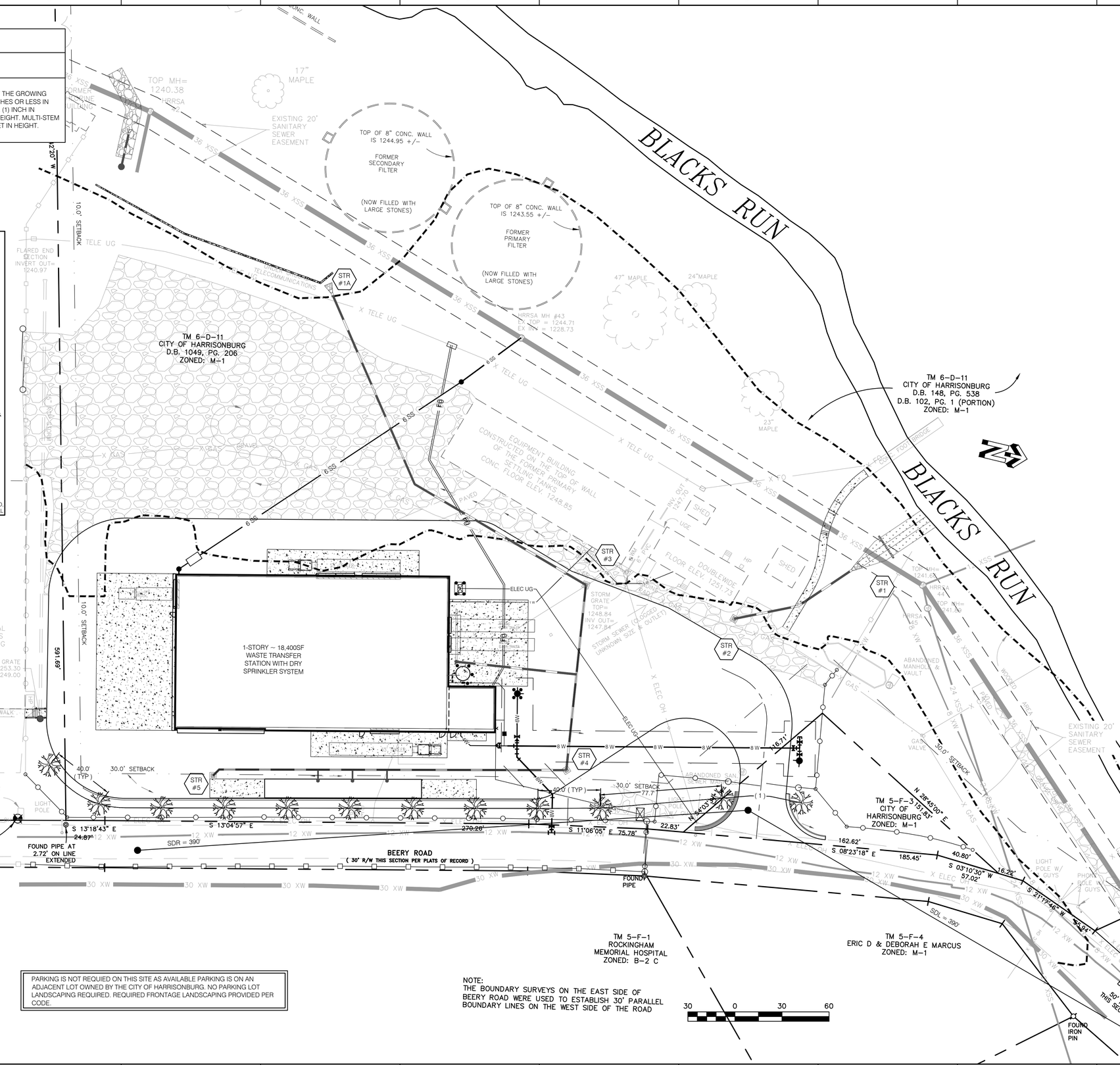

PARKING IS NOT REQUIED ON THIS SITE AS AVAILABLE PARKING IS ON AN ADJACENT LOT OWNED BY THE CITY OF HARRISONBURG. NO PARKING LOT LANDSCAPING REQUIRED. REQUIRED FRONTAGE LANDSCAPING PROVIDED PER CODE.

NOTE:
THE BOUNDARY SURVEYS ON THE EAST SIDE OF BEERY ROAD WERE USED TO ESTABLISH 30' PARALLEL BOUNDARY LINES ON THE WEST SIDE OF THE ROAD

CITY OF HARRISONBURG
SOLID WASTE TRANSFER STATION
2055 BERRY ROAD
HARRISONBURG, VA

VALLEY | ENGINEERING
IDEAS MADE REAL
3231 PEOPLES DRIVE
HARRISONBURG, VIRGINIA 22801
TELEPHONE (540) 434-6385 OR (800) 343-6365
FACSIMILE (540) 432-0506
www.valleyesp.com

COPYRIGHT HELD BY VALLEY ENGINEERING, PC. ALL RIGHTS RESERVED. THESE DRAWINGS MAY NOT BE REPRODUCED IN ANY FORM WITHOUT WRITTEN PERMISSION BY VALLEY ENGINEERING, PC.

COMMONWEALTH OF VIRGINIA
DANIEL K. MICHAEL
Lic. No. 028947
PROFESSIONAL ENGINEER
10-11-16

BID SET

REVISIONS:
08/17/2016 - CITY COMMENTS
10/04/2016 - PER CITY COMMENTS

DATE: 7/13/2016
PROJECT No.: 10921-2
EXP./CLIENT No.: 10921-2
SCALE: TBLKSCALE

LANDSCAPE PLAN

SHEET NO.:
C4.02

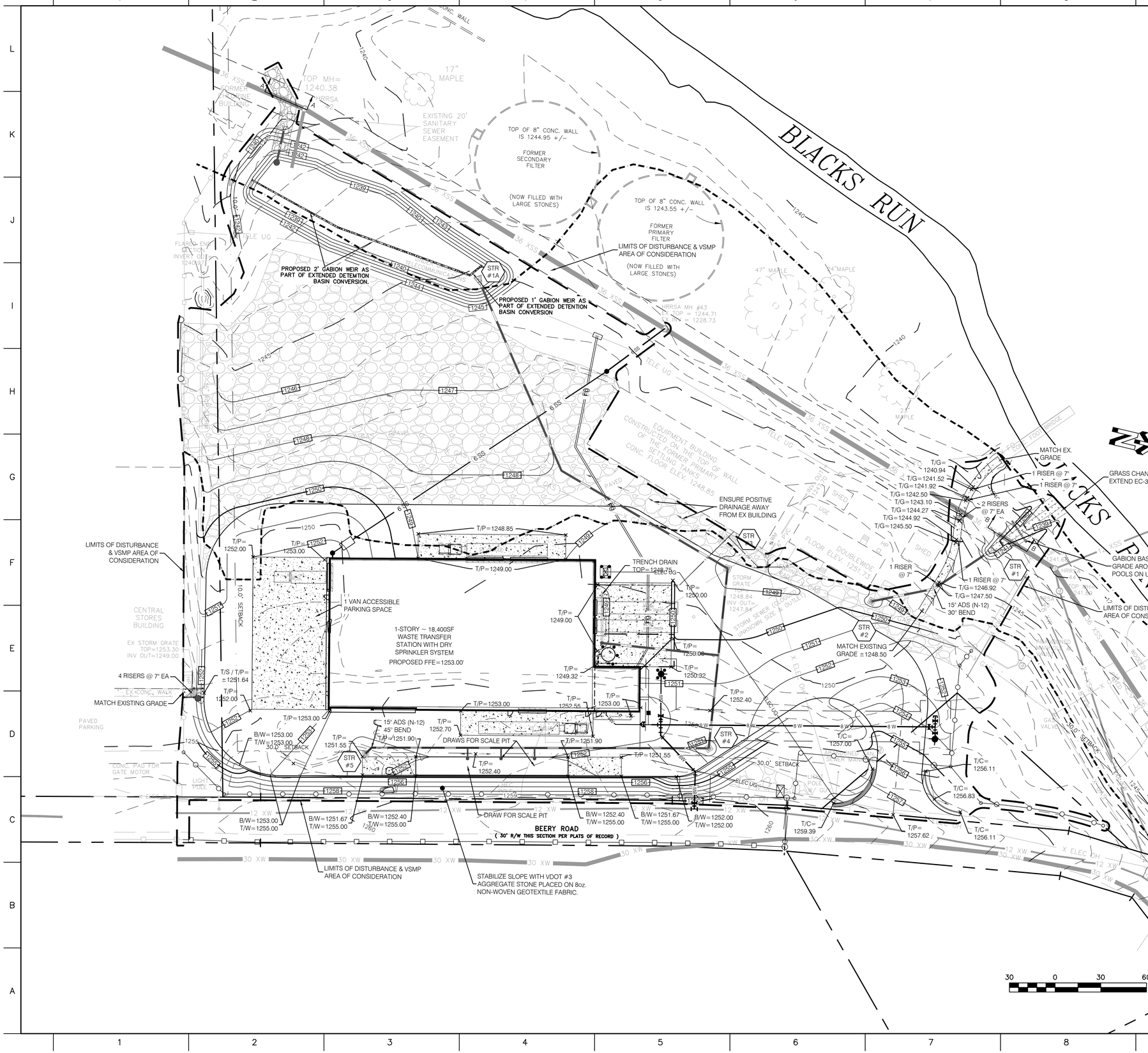

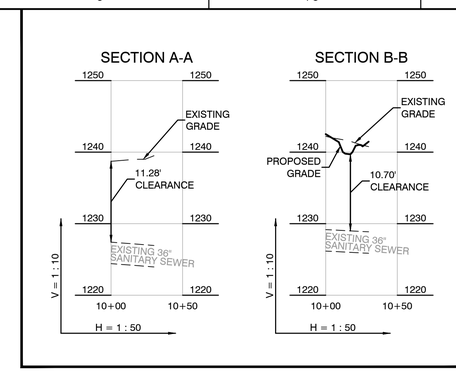

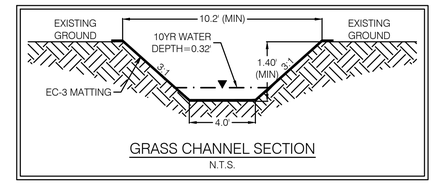

CITY OF HARRISONBURG

SOLID WASTE TRANSFER STATION
2055 BERRY ROAD

HARRISONBURG, VA

VALLEY | ENGINEERING
IDEAS MADE REAL

3231 PEOPLES DRIVE
HARRISONBURG, VIRGINIA 22801
TELEPHONE (540) 434-6385 OR (800) 343-6365
FAX (540) 432-0077
www.valleyesp.com

COPYRIGHT HELD BY VALLEY ENGINEERING, P.C. ALL RIGHTS RESERVED. THESE DRAWINGS MAY NOT BE REPRODUCED WITHOUT WRITTEN PERMISSION FROM VALLEY ENGINEERING, P.C.

COMMONWEALTH OF VIRGINIA
DANIEL K. MICHAEL
Lic. No. 028947
PROFESSIONAL ENGINEER
10-11-16

BID SET

REVISIONS:
08/17/2016 - CITY COMMENTS
10/04/2016 - PER CITY COMMENTS

DATE: 7/13/2016

PROJECT No.: 10921-2

EXP./CLIENT No.: 10921-2

SCALE: TBLKSCALE

GRADING PLAN

SHEET NO.:
C6.01

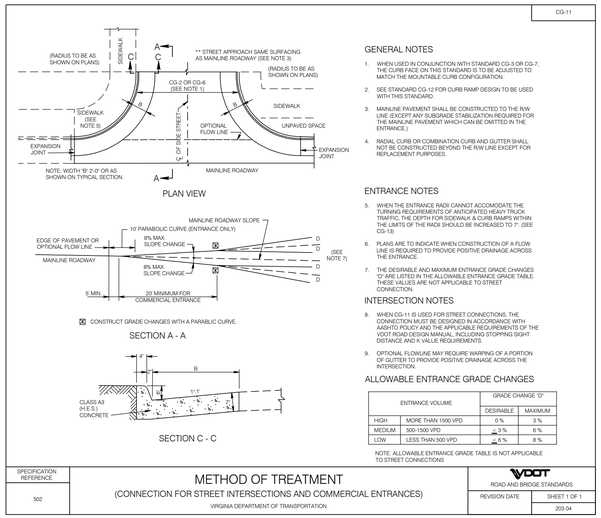

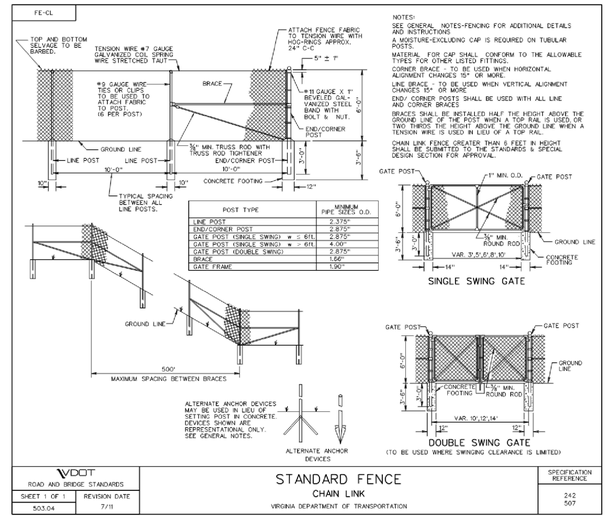

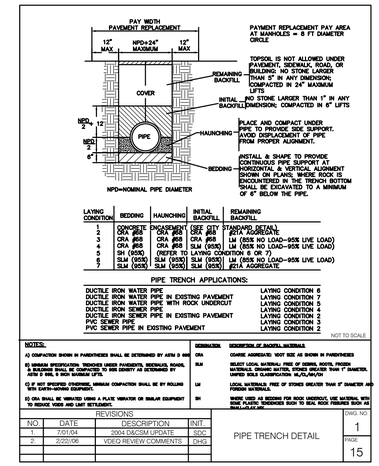

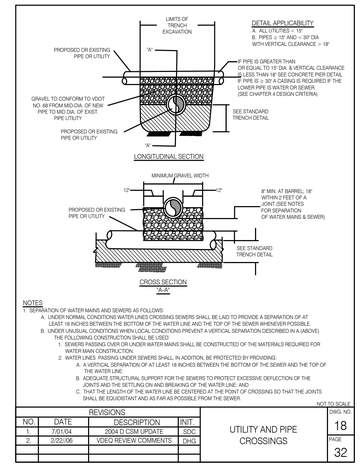

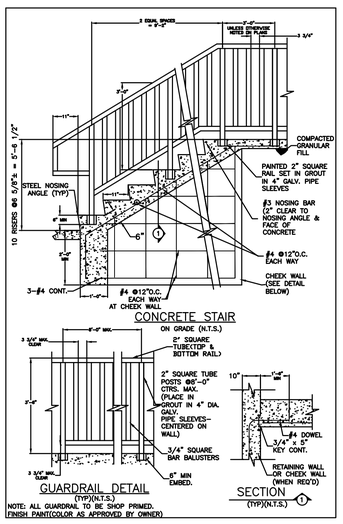

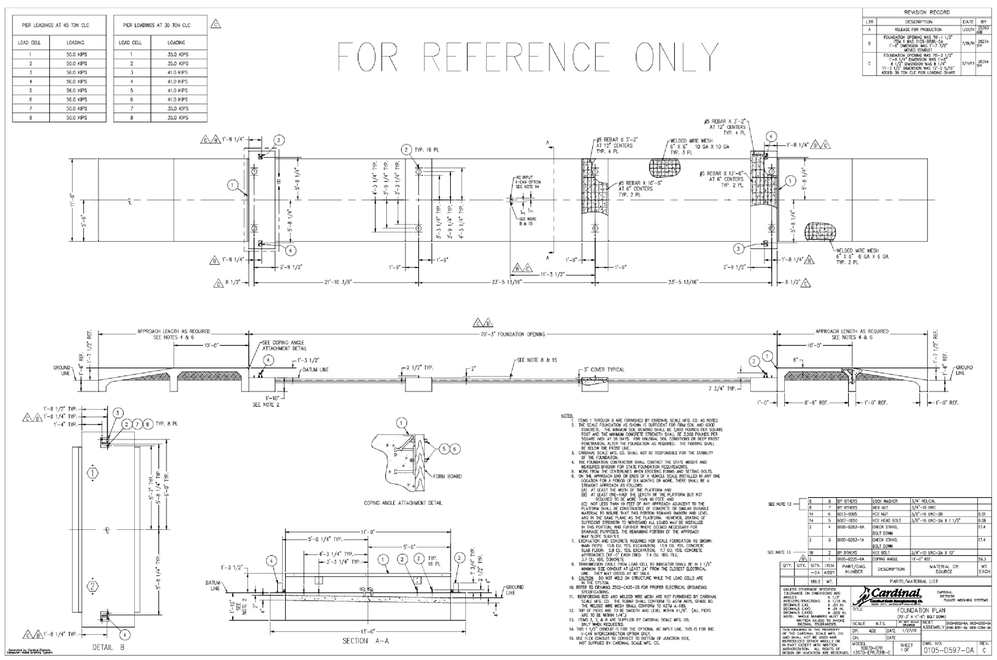

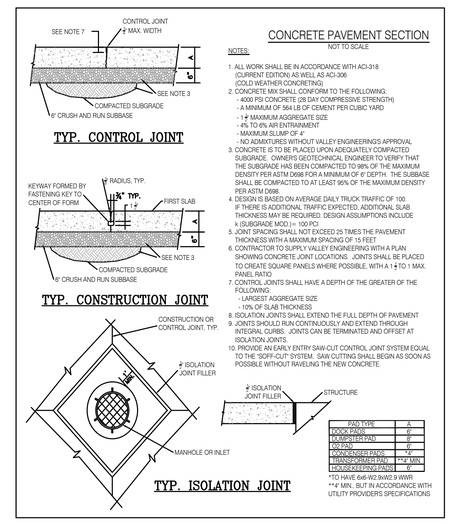

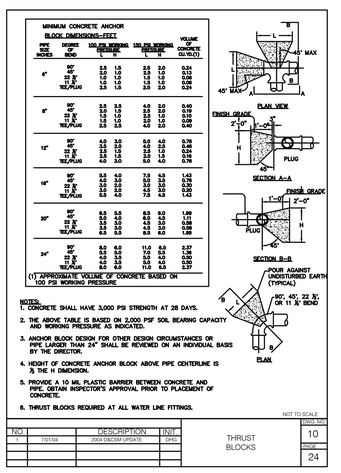

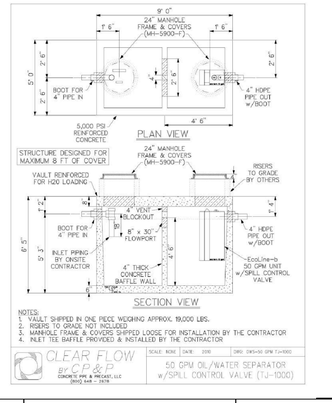

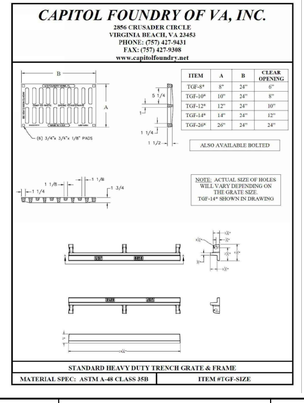

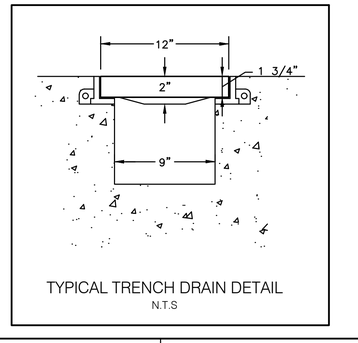

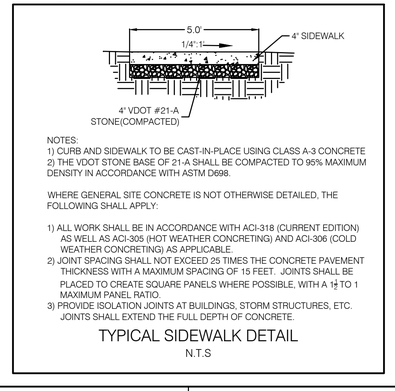

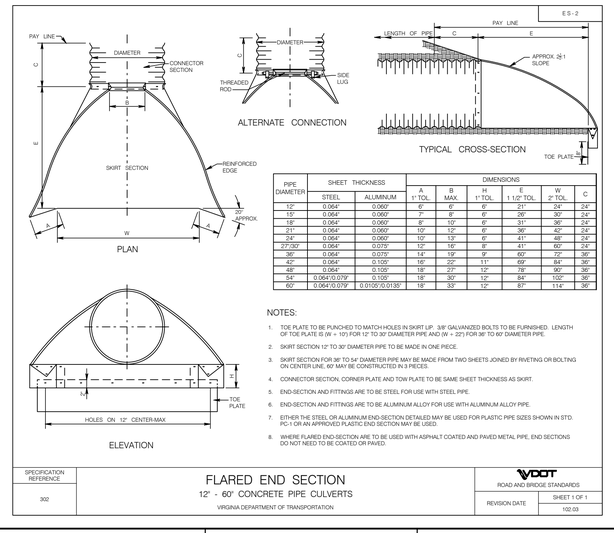

CITY OF HARRISONBURG

SOLID WASTE TRANSFER STATION
2055 BERRY ROAD

HARRISONBURG, VA

VALLEY | ENGINEERING
IDEAS MADE REAL

3231 PEOPLES DRIVE
HARRISONBURG, VIRGINIA 22801
TELEPHONE (540) 433-6563
FAX (540) 432-0685
www.valleyesp.com

COPYRIGHT HELDBY VALLEY ENGINEERING, P.C. ALL RIGHTS RESERVED. THESE DRAWINGS MAY NOT BE REPRODUCED WITHOUT WRITTEN PERMISSION OF VALLEY ENGINEERING, P.C.

COMMONWEALTH OF VIRGINIA
DANIEL K. MICHAEL
PROFESSIONAL ENGINEER
Lic. No. 028947
10-11-16

BID SET

REVISIONS:
08/17/2016 - CITY COMMENTS
10/04/2016 - PER CITY COMMENTS

DATE: 7/13/2016

PROJECT No.: 10921-2

EXP./CLIENT No.: 10921-2

SCALE: TBLKSCALE

DETAILS

SHEET NO.:
C7.01

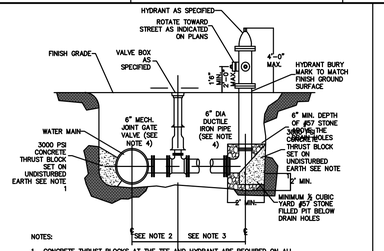

NOTES:

1. CONCRETE THRUST BLOCKS AT THE TEE AND HYDRANT ARE REQUIRED ON ALL INSTALLATIONS EXCEPT WHERE REQUIRED BEARING SUPPORT CANNOT BE OBTAINED. BEARING AREA REQUIRED FOR FIRE HYDRANT THRUST BLOCK SHALL BE EQUAL TO CITY STANDARD FOR 90° BEND.
2. VALVE MUST BE ANCHORED TO THE MAIN TEE BY ONE OF THE FOLLOWING METHODS.
   (A) USE OF APPROVED HYDRANT TEE (WITH LOCKING SWIVEL FLANGE)
   (B) USE OF APPROVED MECHANICAL JOINT RESTRAINING GLANDS ON EACH JOINT.
   (C) RODDING OR OTHER SPECIAL RESTRAINT DEVICE ONLY WHERE SPECIFICALLY APPROVED
   BY DIRECTOR OF PUBLIC UTILITIES.
3. WHERE REQUIRED BEARING SUPPORT FOR HYDRANT, THRUST BLOCK CANNOT BE OBTAINED, JOINTS FROM VALVE TO HYDRANT SHALL BE RESTRAINED ACCORDING TO 2B.
4. DESIGNS REQUIRING FIRE HYDRANT LEAD LINES AND VALVES GREATER THAN 6" SIZE SHALL BE REDUCED TO 6" DIRECTLY ADJACENT TO THE FIRE HYDRANT. THRUST BLOCKS SHALL BE SIZED BASED ON THE LEAD LINE SIZE.
5. FIRE HYDRANT WEEP HOLES SHALL NOT BE INSTALLED BELOW THE GROUND WATER TABLE. WHERE FIELD EXCAVATION REVEALS THIS CONDITION REDESIGN WILL BE REQUIRED TO ADDRESS THE POTENTIAL CROSS CONNECTION.

NOT TO SCALE

REVISIONS					
NO.	DATE	DESCRIPTION	INIT.	FIRE HYDRANT	DWG. NO. 06
1.	9/24/04	2004 D&CSM UPDATE	SDC		PAGE 20
2.	3/28/06	VDH REVIEW AND COMMENT	DHG		

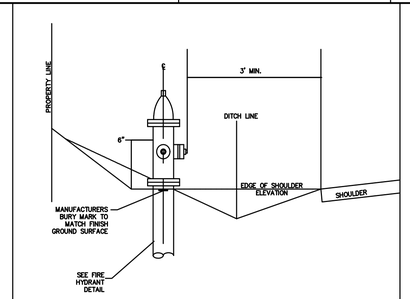

TYPICAL SECTION STREET WITHOUT CURB AND GUTTER

NOT TO SCALE

REVISIONS					
NO.	DATE	DESCRIPTION	INIT.	LOCATION OF FIRE HYDRANTS	DWG. NO. 08
1.	7/01/04	2004 D&CSM UPDATE	SDC		PAGE 22

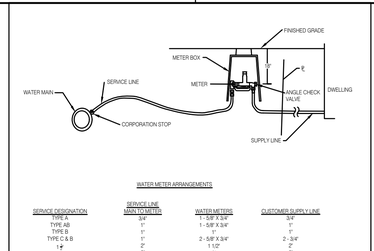

WATER METER ARRANGEMENTS

SERVICE DESIGNATION	SERVICE LINE MINIMUM WALL	WATER METERS	CUSTOMER SUPPLY LINE
TYPE A	3/4"	1 - 5/8" X 3/4"	3/4"
TYPE AB	1"	1 - 5/8" X 3/4"	1"
TYPE B	1"	1"	1"
TYPE C & B	1"	2 - 5/8" X 3/4"	2 - 3/4"
1"	2"	1 1/2"	2"
2"	2"	2"	2"
3"	3"	3"	3"
4"	4"	4"	4"
6"	6"	6"	6"
8"	8"	8"	8"
10"	10"	10"	10"
12"	12"	12"	12"

NOTES

1. INCREASED SERVICE LINE SIZE MAY BE REQUIRED TO MAINTAIN A RESIDUAL PRESSURE GREATER THAN 20 PSI AT THE METER.
2. WATER METER SIZE SHALL BE DETERMINED BASED ON FLOWRATE AS DETERMINED OR AWWA APPROVED METHODS USING FIXTURE COUNT PROJECTIONS OF KNOWN DEMAND RATES.
3. CUSTOMERS SUPPLY LINE SHALL BE SIZED TO ADDRESS FRICTION LOSSES AND AVAILABLE PRESSURE IN ACCORDANCE WITH THE VIRGINIA UNIFORM STATEWIDE BUILDING CODE.
4. MATERIAL SPECIFICATIONS PROVIDED IN THE PUBLIC UTILITIES PRODUCT MANUAL. CONSTRUCTION AND INSTALLATION SPECIFICATIONS PROVIDED IN THIS CHAPTER, PART 1.
5. SERVICES SHALL BE BACKFILLED WITH GOOD CLAY DIRT. STONE AGGREGATE MATERIALS AND BLASTED ROCK FRAGMENTS ARE NOT PERMITTED.
6. DESIGN DEVIATIONS FROM THESE STANDARD ARRANGEMENTS WILL RESULT IN ADDITIONAL COST TO BE PAID BY THE CUSTOMER PER CITY CODE, TITLE 7.

NOT TO SCALE

REVISIONS					
NO.	DATE	DESCRIPTION	INIT.	WATER SERVICE AND METER ARRANGEMENTS	DWG. NO. 27
1.	7/01/04	2004 D&CSM UPDATE	DHG		PAGE 41
2.	5/08/09	2009 D&CSM UPDATE	ELR		

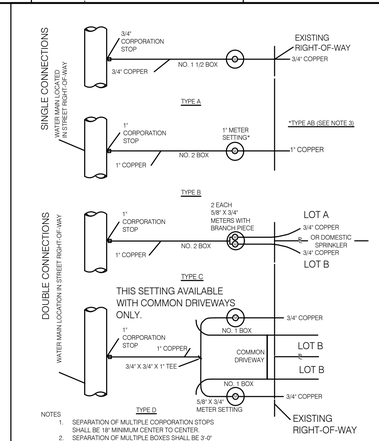

NOTES

1. SEPARATION OF MULTIPLE CORPORATION STOPS SHALL BE 18" MINIMUM CENTER TO CENTER.
2. SEPARATION OF MULTIPLE BOXES SHALL BE 3'-0" MINIMUM CENTER TO CENTER.
3. TO ADAPT 5/8" X 3/4" METER TO 1" YOKE SPECIFY TYPE AB

NOT TO SCALE

REVISIONS					
NO.	DATE	DESCRIPTION	INIT.	5/8" X 3/4" AND 1" WATER SERVICE LAYOUTS	DWG. NO. 28
1.	7/01/04	2004 D&CSM UPDATE	SDC		PAGE 42

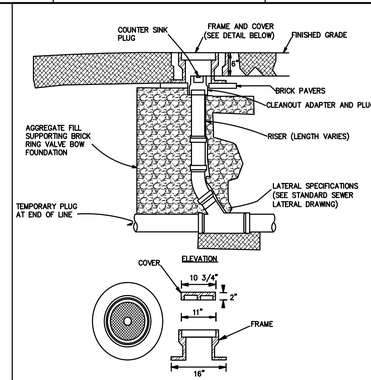

FRAME & COVER DETAIL

NOTES:

1. FRAME & COVER TO BE GRAY IRON CONFORMING TO ASTM A48, CLASS 30 WITH BITUMEN COATING, RATED FOR HS-20 TRAFFIC LOADING. SEE PUBLIC UTILITIES PRODUCT MANUAL.
2. THIS ARRANGEMENT TO BE UTILIZED WHEN THE CLEANOUT IS LOCATED IN A TRAVELWAY, STREET OR PARKING LOT.

NOT TO SCALE

REVISIONS					
NO.	DATE	DESCRIPTION	INIT.	HEAVY DUTY SANITARY LATERAL CLEAN-OUT	DWG NO 51
1.	5/27/04	2004 D&CSM UPDATE	ELR		PAGE 65

1. MANHOLE TO MEET CURRENT REQUIREMENTS OF ASTM C-478.
2. ALL REINFORCING TO MEET CURRENT REQUIREMENTS OF ASTM A-615.
3. CONCRETE TO BE CLASS A-4.
4. JOINT TO MEET CURRENT REQUIREMENTS OF ASTM C-443.
5. PIONEER 301 MASTIC OR APPROVED EQUAL SHALL BE USED IN ADDITION TO THE JOINT SPECIFIED.
6. INVERT SHAPING TO CONFORM TO CITY STANDARD DETAIL.
7. FLEXIBLE JOINTS, MEETING CURRENT REQUIREMENTS OF ASTM C-923, ARE REQUIRED ON ALL PIPE CONNECTIONS TO MANHOLES. WHERE FIELD CONDITIONS WILL NOT PERMIT THE USE OF A FLEXIBLE CONNECTION, A RIGID CONNECTION.
8. JOINT CONFIGURATION MAY BE CAST BELL-&-SPIGOT-UP.
9. MANUFACTURER'S NAME TO BE ON INSIDE OF FACE OF CONE.
10. EXTERIOR OF MANHOLE TO BE ASPHALT COATED. TWO (2) COATS REQUIRED.

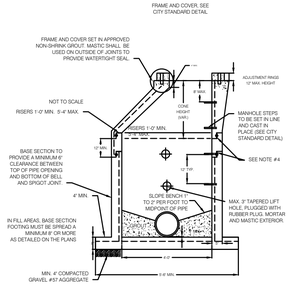

NOT TO SCALE

REVISIONS					
NO.	DATE	DESCRIPTION	INIT.	4'-0" I.D. SANITARY SEWER MANHOLE	DWG. NO. 35
1.	7/01/04	2004 D&CSM UPDATE	DHG		PAGE 49
1.	05/18/09	UPDATE ASTM REFERENCES	SDC		

NOTES:

1. MANHOLE TO BE FORMED AND CONSTRUCTED IN ACCORDANCE WITH THE APPLICABLE STANDARD OR SPECIAL DRAWING. THE INVERT SHAPING AS DETAILED HEREON IS TO CONSIST OF A PORTLAND CEMENT CONCRETE MIX CONFORMING TO CLASS A-3 OR CLASS C-1,EXCEPT THAT 25% OF COARSE AGGREGATE MAY BE UP TO 4" IN DIAMETER AND CONSIST OF STONE, BROKEN BRICK, BROKEN CONCRETE, OR BROKEN CONCRETE BLOCK. THE SURFACE SHALL BE LEFT SMOOTH BY MEANS OF HAND TROWELLING. NONE OF THE COARSE AGGREGATE SHALL REMAIN EXPOSED. BENCHES ARE TO HAVE A LIGHT BROOM FINISH.
2. DETAILS OF INVERT SHAPING AS SHOWN HEREON ARE FOR EXAMPLE PURPOSES ONLY. EACH MANHOLE IS TO BE SHAPED INDIVIDUALLY TO BEST FIT THE PARTICULAR INLET AND OUTLET CONFIGURATION AND FLOW LINES.

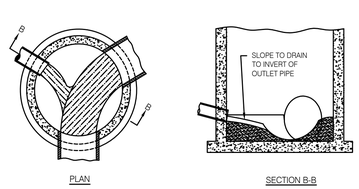

PLAN

SECTION B-B

NOT TO SCALE

REVISIONS					
NO.	DATE	DESCRIPTION	INIT.	SANITARY SEWER MANHOLE INVERT SHAPING	DWG. NO. 40
1.	7/01/04	2004 D&CSM UPDATE	SDC		PAGE 54

ALLOWABLE LEAKAGE PER 1000 FEET OF PIPELINE IN GALLONS PER HOUR

AVG. TEST PRESSURE PSI	NOMINAL PIPE DIAMETER - IN 3	4	6	8	10	12	14	16	18	20	24	30	36	42	48	54
450	0.48	0.64	0.95	1.27	1.59	1.91	2.23	2.55	2.87	3.18	3.82	4.78	5.73	6.69	7.64	8.60
400	0.45	0.60	0.90	1.20	1.50	1.80	2.10	2.40	2.70	3.00	3.60	4.50	5.41	6.31	7.21	8.11
350	0.42	0.56	0.84	1.12	1.40	1.69	1.97	2.25	2.53	2.81	3.37	4.21	5.06	5.90	6.74	7.58
300	0.39	0.52	0.78	1.04	1.30	1.56	1.82	2.08	2.34	2.60	3.12	3.90	4.68	5.46	6.24	7.00
275	0.37	0.50	0.75	1.00	1.24	1.49	1.74	1.99	2.24	2.49	2.99	3.73	4.48	5.23	5.98	6.72
250	0.36	0.47	0.71	0.95	1.19	1.42	1.66	1.90	2.14	2.37	2.85	3.56	4.27	4.99	5.70	6.41
225	0.34	0.45	0.68	0.90	1.13	1.35	1.58	1.80	2.03	2.25	2.70	3.38	4.05	4.73	5.41	6.03
200	0.32	0.43	0.64	0.85	1.06	1.28	1.48	1.70	2.91	2.12	2.55	3.19	3.82	4.46	5.09	5.73
175	0.30	0.40	0.59	1.80	0.99	1.19	1.39	1.59	1.79	1.98	2.38	2.98	3.58	4.17	4.77	5.36
150	0.28	0.37	0.55	0.74	0.92	1.10	1.29	1.47	1.66	1.84	2.21	2.76	3.31	3.86	4.41	4.97
125	0.25	0.34	0.50	0.67	0.84	1.01	1.18	1.34	1.51	1.68	2.01	2.52	3.02	3.53	4.03	4.53
100	0.23	0.30	0.45	0.60	0.75	0.90	1.05	1.20	1.35	1.50	1.80	2.25	2.70	3.15	3.60	4.05

NOTES:

1. ALL NEW WATER MAINS SHALL BE TESTED IN ACCORDANCE WITH AWWA C600, AFTER BACKFILLING TO A HYDROSTATIC PRESSURE NOT LESS THAN 15 PSI ABOVE THE DESIGN WATER PRESSURE FOR THE SYSTEM OR 150 PSI, WHICHEVER IS GREATER. ALL HIGH POINTS IN THE PORTION OF THE SYSTEM UNDER TEST SHALL BE VENTED AND ALL AIR SHALL BE EXPELLED FROM THE SYSTEM PRIOR TO BEGINNING THE TEST. THIS IS ACCOMPLISHED THROUGH THE USE OF AIR RELEASE VALVES PLACES AT HIGH POINTS ALONG THE WATER MAIN. WHERE CONCRETE THRUST BLOCKS ARE USED, THEY SHALL HAVE ATTAINED THEIR FINAL SET STRENGTH PRIOR TO TESTING.
2. AFTER THE PORTION OF THE SYSTEM BEING TESTED HAS REACHED THE REQUIRED PRESSURE, THE PRESSURE SHALL BE MAINTAINED FOR TWO HOURS. AT THE CONCLUSION OF THE PRESSURE TEST, VOLUME OF MAKEUP WATER REQUIRED TO REFILL THE PIPELINE SHALL BE DETERMINED BY MEASUREMENT WITH A DISPLACEMENT METER OR BY PUMPING FROM A VESSEL OF KNOWN VOLUME. ANY JOINTS OR FITTINGS AT WHICH LEAKAGE OCCURS SHALL BE REPAIRED TO ENSURE TIGHTNESS.
3. LEAKAGE SHALL NOT EXCEED THE VALUES FOR THE APPROPRIATE SIZE PIPELINE USING THE TABLE PROVIDED. THIS TABLE IS BASED ON THE EQUATION:

$$L = (ND\sqrt{P})/8900$$

WHERE L=ALLOWABLE LEAKAGE IN GALLONS PER HOUR, N=NO. OF JOINTS IN THE LENGTH OF PIPELINE TESTED, D=NORMAL DIAMETER OF THE PIPE IN INCHES, AND P=AVERAGE TEST PRESSURE DURING THE LEAKAGE TEST IN PSI GAUGE. IF THE PIPELINE UNDER TEST CONTAINS SECTIONS OF VARIOUS DIAMETERS. THE ALLOWABLE LEAKAGE WILL BE THE SUM OF THE COMPUTED LEAKAGE FOR EACH PIPE.

4. LEAK SHALL BE REPAIRED AND RETESTED UNTIL THE LEAKAGE IS WITHIN THE LIMIT SET. METHODS OF REPAIR PRIOR TO RETESTING WILL BE DONE WITH THE DIRECTOR'S APPROVAL AND INSPECTION.

(TO OBTAIN LEAKAGE RATED IN LITERS PER HOUR, MULTIPLY THE VALUES IN THE TABLE BY 3.785)

REVISIONS					
NO.	DATE	DESCRIPTION	INIT.	WATER MAIN LEAKAGE TESTING	PAGE T-2
1.	7/01/04	2004 D&CSM UPDATE	SDC		

NOTES:

MANHOLES SHALL BE VACUUM TESTED IN ACCORDANCE WITH ASTM C 1244. GENERALLY:

1. MANHOLES SHALL BE TESTED AFTER ASSEMBLY AND PRIOR TO BACKFILLING.
2. STUBOUTS, MANHOLE BOOTS AND PIPE PLUGS SHALL BE SECURED TO PREVENT MOVEMENT WHILE THE VACUUM IS DRAWN.
3. INSTALLATION AND OPERATION OF VACUUM EQUIPMENT AND INDICATING DEVICES SHALL BE IN ACCORDANCE WITH EQUIPMENT SPECIFICATIONS FOR WHICH PERFORMANCE INFORMATION HAS BEEN PROVIDED BY THE MANUFACTURER AND APPROVED BY THE DIRECTOR.
4. A MEASURED VACUUM OF 10" OF MERCURY SHALL BE ESTABLISHED IN THE MANHOLE. THE TIME FOR THE VACUUM TO DROP TO 9" OF MERCURY SHALL BE RECORDED.
5. ACCEPTANCE STANDARDS FOR LEAKAGE SHALL BE ESTABLISHED FROM THE ELAPSED TIME FOR A NEGATIVE PRESSURE CHANGE FROM 10" TO 9" OF MERCURY. THE MAXIMUM ALLOWABLE LEAKAGE RATE FOR A FOUR FOOT DIAMETER MANHOLE SHALL BE IN ACCORDANCE WITH THE FOLLOWING:

MANHOLE DEPTH	MINIMUM ELAPSED TIME FOR PRESSURE CHANGE OF 1 INCH OF MERCURY
10 FT OR LESS	60 SECONDS
10 FT BUT LESS THAN 15FT	75 SECONDS
15 FT BUT LESS THAN 25FT	90 SECONDS

FOR MANHOLES FIVE FEET IN DIAMETER, AND AN ADDITIONAL 15 SECONDS AND FOR MANHOLES SIX FEET IN DIAMETER, AND AN ADDITIONAL 10 SECONDS TO THE TIME REQUIREMENTS FOR FOUR FOOT DIAMETER MANHOLES.

6. IF THE MANHOLE FAILS THE TESTS, NECESSARY REPAIRS SHALL BE MADE; THE VACUUM TEST AND REPAIRS SHALL BE REPEATED UNTIL THE MANHOLE PASSES THE TEST OR THE MANHOLE SHALL BE TESTED IN ACCORDANCE WITH THE STANDARD EXFILTRATION TEST AND RATED ACCORDINGLY.
7. IF A MANHOLE JOINT MASTIC IS COMPLETELY PULLED OUT DURING THE VACUUM TEST, THE MANHOLE SHALL BE DISASSEMBLED AND THE MASTIC REPLACED.

REVISIONS					
NO.	DATE	DESCRIPTION	INIT.	AIR VACUUM TESTING OF SEWER MANHOLES	PAGE T-5
1.	7/01/04	2004 D&CSM UPDATE	SDC		
2.	5/11/06	VDEQ REVIEW COMMENTS	DHG		

VR 355-18-012.11 SECTION 3.58 DISINFECTION OF WATER MAINS

A. ALL WATER MAINS SHALL BE DISINFECTED PRIOR TO BEING PLACED IN OPERATION.

B. PRIOR TO DISINFECTION, ALL WATER MAINS SHALL BE FLUSHED UNLESS THE TABLET METHOD OF DISINFECTION IS USED. ALL VALVES AND HYDRANTS SHALL BE OPERATED DURING THIS OPERATION. FLUSHING VELOCITIES SHOULD NOT BE LESS THAN 2.5 FT/SEC.

C. METHODS OF CHLORINE APPLICATION:

1. CONTINUOUS FEED METHOD - POTABLE WATER SHALL BE INTRODUCED INTO THE PIPE MAIN AT A CONSTANT FLOW RATE. CHLORINE SHALL BE ADDED AT A CONSTANT RATE TO THIS FLOW SO THAT THE CHLORINE CONCENTRATION IN THE WATER IN THE PIPE IS AT LEAST 50 MG/L. THE CHLORINATED WATER SHALL REMAIN IN THE MAIN AT LEAST 24 HOURS. AFTER WHICH THE CHLORINE CONCENTRATION IN THE WATER SHALL BE AT LEAST 10 MG/L. ALL VALVES AND APPURTENANCES SHALL BE OPERATED WHILE THE CHLORINATED WATER REMAINS IN THE WATER MAIN.
2. SLUG METHOD - POTABLE WATER SHALL BE INTRODUCED INTO THE MAIN AT A CONSTANT FLOW RATE. THE WATER SHALL RECEIVE A CHLORINE DOSAGE WHICH WILL RESULT IN A CHLORINE CONCENTRATION OF 100 MG/L IN A "SLUG" OF THE WATER. THE CHLORINE SHALL BE ADDED LONG ENOUGH TO INSURE THAT ALL PORTIONS OF THE MAIN ARE EXPOSED TO THE 100 MG/L CHLORINE SOLUTION FOR AT LEAST 3 HOURS. THE CHLORINE RESIDUAL SHALL BE CHECKED AT REGULAR INTERVALS NOT TO EXCEED 2000 FEET TO INSURE THAT ADEQUATE RESIDUAL IS MAINTAINED AS THE CHLORINATED WATER PASSES VALVES AND APPURTENANCES. THEY SHALL BE OPERATED TO INSURE DISINFECTION OF THESE APPURTENANCES.
3. TABLET METHOD - THIS METHOD SHALL NOT BE USED IF NON-POTABLE WATER OR FOREIGN MATERIALS HAVE ENTERED THE MAINS OR IF THE WATER TEMPERATURE IS BELOW 5° C (41° F). THE TABLETS SHALL BE PLACED IN EACH SECTION AND IN ALL APPURTENANCES. ENOUGH TABLETS SHALL BE USED TO INSURE THAT A CHLORINE CONCENTRATION OF 25 MG/L IS PROVIDED IN THE WATER. THEY SHALL BE ATTACHED BY AN ADHESIVE TO THE TOP OF THE PIPE SECTIONS AND CRUSHED OR RUBBED IN APPURTENANCES. THE ADHESIVE SHALL BE ACCEPTABLE TO THE DIVISION. THE VELOCITY OF THE POTABLE WATER IN THE MAIN SHALL BE LESS THAN 1 FT/SEC. THE WATER SHALL THEN REMAIN IN CONTACT WITH THE PIPE FOR 24 HOURS. ALL VALVES AND APPURTENANCES SHALL BE OPERATED WHILE THE CHLORINATED WATER IS IN THE WATER MAIN.

D. FINAL FLUSHING - AFTER THE REQUIRED RETENTION PERIOD, THE CHLORINATED WATER SHALL BE FLUSHED FROM THE MAIN USING POTABLE WATER.

E. TESTING - AFTER THE MAINS HAVE BEEN FLUSHED, THE WATER MAINS SHALL BE TESTED AS OUTLINED BELOW:

1. AFTER FINAL FLUSHING AND BEFORE THE WATER MAIN IS PLACED IN SERVICE, SAMPLES SHALL BE COLLECTED AND TESTED FOR BACTERIOLOGIC QUALITY AND SHALL SHOW THE ABSENCE OF COLIFORM ORGANISMS. AT LEAST TWO SAMPLES SHALL BE COLLECTED AT LEAST 24 HOURS APART AT INTERVALS NOT EXCEEDING 1200 FEET, AND TESTED BY A STATE HEALTH DEPARTMENT APPROVED LABORATORY.
2. A SAMPLING TAP CONSISTS OF A CORPORATION COCK WITH METAL PIPE. THE CORPORATION STOP INLET SHALL BE MAKE- 1 INCH IN SIZE, PURSUANT TO CHAPTER 7, SECTION 7.5. (UPON COLLECTION OF SAMPLING THE CONTRACTOR SHALL CONSTRUCT A PARTIAL WATER SERVICE, CHAPTER 7, DWG. 26, PAGE 46, OR MANUAL AIR RELEASE, DWG. 32, PAGE 52, COMPLETE AND READY FOR USE.)
3. SAMPLES SHALL BE COLLECTED BY CITY PERSONNEL UPON PRIOR SCHEDULING BY THE CONTRACTOR WITH THE APPROPRIATE CITY DEPARTMENT PERSONNEL.

F. REPAIRS - CLEANING, DISINFECTING, FLUSHING, TESTING, OR SIMILAR OPERATIONAL ACTIONS SHALL BE IN ACCORDANCE WITH THE MOST CURRENT STANDARD ISSUED BY AWWA. (AWWA C-651)

REVISIONS					
NO.	DATE	DESCRIPTION	INIT.	DISINFECTION OF WATER MAINS	PAGE T-7
1.	7/01/04	2004 D&CSM UPDATE	SDC		

CITY OF HARRISONBURG

SOLID WASTE TRANSFER STATION

2055 BERRY ROAD

HARRISONBURG, VA

VALLEY | ENGINEERING
IDEAS MADE REAL
3231 PEOPLES DRIVE
HARRISONBURG, VIRGINIA 22801
TELEPHONE (540) 432-0656 FAX (540) 432-0685
www.valleyesp.com

COPYRIGHT HELDER VALLEY ENGINEERING, P.C. ALL RIGHTS RESERVED. THESE DRAWINGS MAY NOT BE REPRODUCED IN ANY FORM WITHOUT WRITTEN PERMISSION FROM VALLEY ENGINEERING, P.C.

COMMONWEALTH OF VIRGINIA
DANIEL K. MICHAEL
Lic. No. 028947
10-11-16
PROFESSIONAL ENGINEER

BID SET

REVISIONS:
08/17/2016 - CITY COMMENTS
10/04/2016 - PER CITY COMMENTS

DATE: 7/13/2016

PROJECT No.: 10921-2

EXP./CLIENT No.: 10921-2

SCALE: TBLKSCALE

DETAILS

SHEET NO.:
C7.02