CONSTRUCTION DOCUMENTS

* * *

RAMBLEWOOD PARK IMPROVEMENTS

HARRISONBURG, VIRGINIA

* * *

SITE ADDRESS:	2129 RAMBLEWOOD ROAD HARRISONBURG, VA 22801
OWNER: OWNER CONTACT:	CITY OF HARRISONBURG CHARLIE HONAKER 320 EAST MOSBY ROAD HARRISONBURG, VA 22801
TELEPHONE NO:	540-434-5928
ENGINEER: ADDRESS:	JULIA W. SKARE, PE DRAPER ADEN ASSOCIATES 700 HARRIS STREET, SUITE E CHARLOTTESVILLE, VA 22903
TELEPHONE NO:	434-295-0700
SOURCE OF SURVEY:	DRAPER ADEN ASSOCIATES 700 HARRIS STREET, SUITE E CHARLOTTESVILLE, VA 22903 & LOUISA AERIAL SURVEYS 30 INDUSTRIAL DRIVE, SUITE 2B MINERAL, VA 23117
TAX MAP/PARCEL ID:	TM 3-B-1 003 A 1 3 B 1 3 DB 293-148
PRESENT ZONING:	M-1 GENERAL INDUSTRIAL
SETBACKS:	FRONT - 30' SIDES - 10' REAR - 10'
PRESENT USE:	PUBLIC FACILITIES (CAPPED LANDFILL AND PUBLIC PARK)
PROPERTY AREA:	51.58 ACRES
LIMITS OF DISTURBANCE:	1,231,000 SQUARE FEET (28 ACRES)

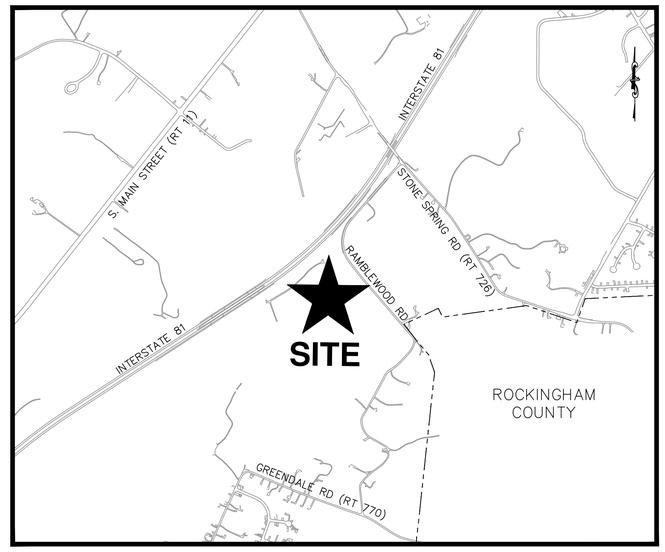

VICINITY MAP
HARRISONBURG, VIRGINIA
1" = 1000'

PROJECT DESCRIPTION

THE PROJECT CONSISTS OF THE PHASED RE-CONSTRUCTION OF APPROXIMATELY 28 ACRES OF RAMBLEWOOD PARK IN THE CITY OF HARRISONBURG, VIRGINIA. RAMBLEWOOD PARK CURRENTLY CONSISTS OF FOUR SOFTBALL FIELDS AND ASSOCIATED SITE FEATURE ON TOP OF AN OLD LANDFILL. THE LANDFILL WILL BE RECAPPED AFTER SITE DEMOLITION IS COMPLETE. THE FOUR SOFTBALL FIELDS WILL BE RE-CONSTRUCTED ON THE RECAPPED LANDFILL IN TWO PHASES.
PHASE 1 INCLUDES TWO SOFTBALL FIELDS AND SITE IMPROVEMENTS INCLUDING AN ASPHALT PARKING LOT AND DRIVE AISLES, ASPHALT PEDESTRIAN PATHS, A CONCESSION BUILDING, A MAINTENANCE BUILDING, RETRO-FITTING OF A STORMWATER MANAGEMENT FACILITY AND UTILITY INSTALLATION. UTILITIES INCLUDE A DOMESTIC WATERLINE, A SANITARY LINE, ELECTRICAL LINES, TELEPHONE LINES, PARKING LOT & FIELD LIGHTING, IRRIGATION SYSTEM AND A STORM SEWER SYSTEM.
PHASE 2 INCLUDES THE FINAL TWO SOFTBALL FIELDS AND THEIR ASSOCIATED SITE IMPROVEMENTS INCLUDING ASPHALT PEDESTRIAN PATHS, A RETAINING WALL, AND ADDITIONAL UTILITY INSTALLATION. UTILITIES INCLUDE THE EXTENSION OF THE FIELD LIGHTING, IRRIGATION AND STORM SEWER SYSTEMS.

ORIGINAL DATE OF PLANS

MAY 10, 2012

* * * *

DAA PROJECT 06154-192C

SHEET LIST

Sheet Number	Sheet Title
C0.0	COVER SHEET
C0.1	GENERAL NOTES AND LEGEND
C1.0	OVERALL EXISTING MAP (PRIOR TO FILL)
C1.1	TOPOGRAPHIC SURVEY - NORTHWEST
C1.2	TOPOGRAPHIC SURVEY - NORTHEAST
C1.3	TOPOGRAPHIC SURVEY - SOUTH
C2.0	DEMOLITION PLAN
C2.1	EROSION AND SEDIMENT CONTROL - INITIAL NORTH
C2.2	EROSION AND SEDIMENT CONTROL - INITIAL SOUTH
C2.3	EROSION AND SEDIMENT CONTROL - PHASE 1
C2.4	EROSION AND SEDIMENT CONTROL - PHASE 2
C3.0	OVERALL SITE AND PERIMETER FENCE LAYOUT
C3.1	SITE PLAN - PHASE 1
C3.2	SITE PLAN - PHASE 2
C4.0	UTILITY PLAN - PHASE 1
C5.0	GRADING PLAN FOR LANDFILL CAP
C5.1	GRADING PLAN - PHASE 1
C5.2	GRADING PLAN - PHASE 2
C5.3	PRE-DEVELOPED DRAINAGE AREA MAP
C5.4	POST-DEVELOPED DRAINAGE AREA MAP
C6.0	STORM SEWER SCHEDULE
C6.1	STORM PROFILES - STRUCTURES 5-20
C6.2	STORM PROFILES - STRUCTURES 21-30
C6.3	STORM PROFILES - STRUCTURES 30-39
C6.4	SANITARY SEWER PROFILE
C7.0	LANDFILL CAP DETAILS
C7.1	WELL AND PROBE IMPROVEMENT DETAILS
C7.2	EROSION AND SEDIMENT CONTROL DETAILS
C7.3	EROSION AND SEDIMENT CONTROL DETAILS
C7.4	CONSTRUCTION DETAILS
C7.5	CONSTRUCTION DETAILS
C7.6	WATER DETAILS
C7.7	SANITARY SEWER DETAILS
C7.8	STORMWATER DETAILS
E0.0	LEGENDS, DETAILS - PHASE 1
E0.1	SCHEDULES - PHASE 1
E1.0	ELECTRICAL SITE PLAN - PHASE 1
E1.1	ELECTRICAL SITE PLAN - PHASE 2
E2.0	ILLUMINATION SUMMARY - 1 OF 2
E2.1	ILLUMINATION SUMMARY - 2 OF 2
IR1.1	IRRIGATION LAYOUT - 1 OF 2
IR1.2	IRRIGATION LAYOUT - 2 OF 2

NOTE: CONTRACTOR TO CONTACT MISS UTILITY (811) IN ADVANCE OF PLANNED WORK. ADVANCE TIME PERIOD SHALL BE IN ACCORDANCE WITH CURRENT MISS UTILITY GUIDELINES (www.missutilityofvirginia.com).

ALWAYS CARE BEFORE YOU DIG
CALL MISS UTILITY
VIRGINIA SAFE DIG NO.

These documents, including drawings and specifications, were prepared by Draper Aden Associates, Consulting Engineers, pursuant to a contract by and between Draper Aden Associates and the City of Harrisonburg with respect to the project described in said contract. Any reuse or modification of said documents (whether hard copy or electronic) without written verification or adaptation by Draper Aden Associates for the specific purpose intended will be at the sole risk of the individual or entity utilizing said documents, drawings and specifications and such use is without the authorization of Draper Aden Associates. Draper Aden Associates, Consulting Engineers, shall have no legal liability resulting from any and all claims, damages, losses, and expenses, including attorney's fees arising out of the unauthorized use of these documents, drawings, specifications, reports, and studies prepared as a result of the aforesaid contract.

THESE PLANS HAVE BEEN SUBJECTED TO TECHNICAL AND QUALITY REVIEWS BY:

NAME: PRINTED	SIGNATURE	DATE
E. CAMPBELL BOLTON, E.I.T. PROJECT DESIGNER	E. Campbell B	5/10/13
JULIA W. SKARE, P.E. PROJECT MANAGER	Julia W. Skare	5/10/13
GLENN W. CUSTIS, P.E. QUALITY REVIEWER	Glenn W. Custis	5/10/13

COMMONWEALTH OF VIRGINIA
JULIA WALLACE SKARE
Lic. No. 43893
5/10/13
PROFESSIONAL ENGINEER

Draper Aden Associates
Engineering • Surveying • Environmental Services
Charlottesville, VA
700 Harris Street, Suite E
Charlottesville, VA 22903
434-295-0700 Fax: 434-295-2105
www.daa.com
Blacksburg, VA
Richmond, VA
Hampton Roads, VA

COVER SHEET

RAMBLEWOOD PARK IMPROVEMENTS
RAMBLEWOOD PARK, HARRISONBURG, VIRGINIA

REVISIONS

DESIGNED BY:	JWS
DRAWN BY:	ECB
CHECKED BY:	GWC
SCALE:	NO SCALE
DATE:	MAY 10, 2013
PROJECT NUMBER:	06154-192CV

C0.0

GENERAL NOTES

1. DIMENSIONS AND RADII ARE TO FACE OF CURB, WHERE APPLICABLE, UNLESS OTHERWISE INDICATED.
2. DIMENSIONS AT BUILDING ARE TO OUTSIDE FACE, UNLESS OTHERWISE INDICATED.
3. THE CONTRACTOR SHALL SECURE ALL NECESSARY PERMITS FOR THIS PROJECT FROM THE CITY OF HARRISONBURG OR STATE AGENCIES.
4. ANY PERMITS WHICH MUST BE OBTAINED SHALL BE THE CONTRACTOR'S RESPONSIBILITY AND AT HIS EXPENSE. THE CONTRACTOR SHALL BE RESPONSIBLE FOR ABIDING BY ALL CONDITIONS AND REQUIREMENTS OF THE PERMITS.
5. ALL PAVING MATERIALS AND DRAINAGE STRUCTURES SHALL BE BUILT AND INSTALLED IN ACCORDANCE WITH VIRGINIA DEPARTMENT OF TRANSPORTATION STANDARDS AND SPECIFICATIONS.
6. THE LOCATION OF EXISTING SEWER, WATER OR GAS LINES, CONDUITS OR OTHER STRUCTURES ACROSS, UNDERNEATH, OR OTHERWISE ALONG THE LINE OF PROPOSED WORK ARE NOT NECESSARILY SHOWN ON THE PLANS, AND IF SHOWN ARE ONLY APPROXIMATE. CONTRACTOR SHALL VERIFY LOCATION AND ELEVATION OF ALL UNDERGROUND UTILITIES SHOWN ON THE PLANS IN AREAS OF CONSTRUCTION PRIOR TO STARTING WORK. CONTACT ENGINEER IMMEDIATELY IF LOCATION OR ELEVATION IS DIFFERENT FROM THAT SHOWN ON THE PLANS, IF THERE APPEARS TO BE A CONFLICT, OR UPON DISCOVERY OF ANY UTILITY NOT SHOWN ON THE PLANS. FOR ASSISTANCE IN LOCATING EXISTING UTILITIES CALL "MISS UTILITY", 1-800-552-7001.
7. ALL WATER AND SEWER CONSTRUCTION AND MATERIALS SHALL CONFORM WITH THE LATEST DESIGN AND CONSTRUCTION STANDARDS MANUAL OF THE CITY OF HARRISONBURG. (REFERENCE CHAPTER 7 OF THE MANUAL FOR DETAILS.)
8. WHERE PAVEMENT IS BEING REMOVED, THE CONTRACTOR SHALL REMOVE AGGREGATE BASE MATERIAL TO SUB-GRADE.
9. DAMAGE TO UTILITIES (INCLUDING UNDERGROUND) OR PROPERTY OF OTHERS BY CONTRACTOR DURING CONSTRUCTION SHALL BE REPAIRED TO PRE-CONSTRUCTION CONDITIONS BY CONTRACTOR AT NO COST TO OWNER.
10. EXISTING PAVEMENT AND OTHER SURFACES DISTURBED BY CONTRACTOR (WHICH ARE NOT TO BE REMOVED) SHALL BE REPLACED TO MATCH EXISTING SECTIONS.
11. THE CONTRACTOR IS REQUIRED TO MAINTAIN ALL DITCHES, PIPES, AND OTHER DRAINAGE STRUCTURES FREE FROM OBSTRUCTION UNTIL WORK IS ACCEPTED BY THE OWNER. THE CONTRACTOR IS RESPONSIBLE FOR ANY DAMAGES CAUSED BY FAILURE TO MAINTAIN DRAINAGE STRUCTURE IN OPERABLE CONDITION.
12. THE CONTRACTOR SHALL HAVE A SET OF APPROVED PLANS AVAILABLE AT THE SITE AT ALL TIMES WHEN WORK IS BEING PERFORMED. A DESIGNATED RESPONSIBLE EMPLOYEE SHALL BE AVAILABLE FOR CONTACT BY CITY OF HARRISONBURG INSPECTORS.
13. THE CONTRACTOR SHALL COORDINATE THE LOCATION OF NEW UNDERGROUND TELEPHONE SERVICE WITH THE TELEPHONE UTILITY AND THE OWNER'S REQUIREMENTS.
14. ALL PROPOSED UTILITIES ARE TO BE INSTALLED UNDERGROUND INCLUDING ELECTRIC, TELEPHONE AND CATV.
15. ALL UNDERGROUND UTILITIES (WATER, SANITARY SEWER, ELECTRICITY, TELEPHONE, ETC.) SHALL BE INSTALLED AND TESTED SATISFACTORILY PRIOR TO COMMENCING ANY PAVING OPERATIONS WHERE SUCH UTILITIES ARE WITHIN THE LIMITS OF PAVEMENT.
16. THE CONTRACTOR SHALL NOTIFY THE CITY OF HARRISONBURG AT LEAST 72 HOURS PRIOR TO STARTING WORK ON THIS PROJECT.
17. ALL GROUND COVER AND LANDSCAPING TO REMAIN SHALL BE PROPERLY MAINTAINED IN A HEALTHY CONDITION AT ALL TIMES. DEAD PLANT MATERIALS SHALL BE REMOVED IN A REASONABLE TIME AND REPLACED DURING THE NORMAL PLANTING SEASON.
18. ALL EXCAVATION FOR UNDERGROUND PIPE INSTALLATION MUST COMPLY WITH OSHA STANDARDS FOR THE CONSTRUCTION INDUSTRY (29 CFR PART 1926).
19. VERIFY THE PROPOSED LAYOUT WITH ITS RELATIONSHIP TO THE EXISTING SITE SURVEY. ALSO VERIFY ALL DIMENSIONS, SITE CONDITIONS, AND MATERIAL SPECIFICATIONS AND NOTIFY THE OWNER AND ENGINEER OF ANY ERRORS, OMISSIONS, OR DISCREPANCIES BEFORE COMMENCING OR PROCEEDING WITH WORK.
20. DEVIATIONS FROM, OR CHANGES TO THESE PLANS WILL NOT BE ALLOWED, UNLESS OTHERWISE APPROVED BY THE ENGINEER.
21. MAKE EXPLORATORY EXCAVATIONS AND LOCATE EXISTING UTILITIES SUFFICIENTLY AHEAD OF CONSTRUCTION TO PERMIT REVISIONS TO THE PLANS IF NECESSARY. THE EXISTENCE AND/OR LOCATION OF UTILITIES SHOWN ON THESE PLANS MAY BE ONLY APPROXIMATELY CORRECT AND TAKE PRECAUTIONARY MEASURES TO PROTECT THE UTILITIES SHOWN HEREON AND ANY OTHER EXISTING UTILITIES NOT OF RECORD OR NOT SHOWN ON THESE PLANS. REPAIR AT YOUR OWN EXPENSE, ANY EXISTING UTILITIES DAMAGED DURING CONSTRUCTION. IF A UTILITY IS DAMAGED DURING CONSTRUCTION, STOP WORK IMMEDIATELY AND NOTIFY THE ENGINEER.
22. PROPERLY SECURE THE CONSTRUCTION AREA AT ALL TIMES AGAINST UNAUTHORIZED ENTRY AND ADEQUATELY PROTECT EQUIPMENT, MATERIALS, AND COMPLETED WORK FROM THEFT AND VANDALISM. THE OWNER IS NOT RESPONSIBLE FOR THE LOSS OF ANY MATERIAL STORED AT THE SITE.
23. ASSUME SOLE AND COMPLETE RESPONSIBILITY FOR JOB SITE CONDITIONS DURING THE COURSE OF CONSTRUCTION OF THIS PROJECT. INCLUDING SAFETY OF ALL PERSONS AND PROPERTY; THAT THIS REQUIREMENT SHALL APPLY CONTINUOUSLY AND NOT BE LIMITED TO NORMAL WORKING HOURS; AND SHALL DEFEND, INDEMNIFY, AND HOLD THE OWNER AND THE ENGINEER HARMLESS FROM ANY AND ALL LIABILITY, REAL AND ALLEGED, IN CONNECTION WITH THE PERFORMANCE OF WORK ON THIS PROJECT, EXCEPTING FOR LIABILITY ARISING FROM "THE SOLE NEGLIGENCE OF THE OWNER OR THE ENGINEER."
24. ALL TURF AREAS THAT ARE IMPACTED OR DISTURBED BY VEHICLES, EQUIPMENT, OR ACTIVITY SHALL BE REPAIRED, REGRADED, AND RESEEDED TO THE SATISFACTION OF THE OWNER.
25. PERFORM ALL WORK USING DIMENSIONS SHOWN ON THESE PLANS. DO NOT USE SCALES, RULERS, DIVIDERS, MAP WHEELS OR OTHER MEASURING DEVICES TO DETERMINE SPATIAL RELATIONSHIPS ON THESE DRAWINGS.
26. ALL UNSUITABLE MATERIAL SHALL BE REMOVED FROM THE CONSTRUCTION LIMITS OF PAVED AREAS.

ROAD AND DRAINAGE STANDARD NOTES

1. ALL CONSTRUCTION AND MATERIALS SHALL CONFORM WITH THE STANDARDS AND SPECIFICATIONS OF THE VIRGINIA DEPARTMENT OF TRANSPORTATION'S, LATEST EDITION, EXCEPT WHERE THE CITY OF HARRISONBURG STANDARDS ARE APPLICABLE.
2. ALL STORM SEWER SHALL BE HDPE OR ASTM, C-76, CLASS III, EXCEPT AS NOTED.
3. ALL CONCRETE DRAINAGE STRUCTURES SHALL BE EITHER PRECAST OR CAST-IN-PLACE.
4. ALL STORM SEWER SHALL HAVE A MINIMUM OF 4" AGGREGATE BEDDING MATERIAL.
5. A PERMIT MUST BE OBTAINED FROM THE OFFICE OF THE CITY OF HARRISONBURG ENGINEER PRIOR TO DOING ANY UTILITY WORK WITHIN EXISTING RIGHT-OF-WAY.
6. ALL CURB AND GUTTER SHALL BE VDOT STANDARD, EXCEPT AS NOTED.
7. A DROP INLET ON GRADE SHALL BE POURED WITH THE THROAT ON THE SAME GRADE AS THE ADJOINING CURB AND GUTTER.
8. THE PAVEMENT DESIGN IS SUBJECT TO CHANGE DUE TO SOIL CONDITIONS AT THE TIME OF CONSTRUCTION, AS DETERMINED BY THE ENGINEER FOR THE CITY OF HARRISONBURG.
9. ADEQUATE SIGHT DISTANCE, AS REQUIRED BY THE TRAFFIC ENGINEER, SHALL BE REQUIRED AT ALL INTERSECTIONS AND ON ALL ROADWAYS INCLUDED IN THIS DEVELOPMENT.
10. CONTRACTOR IS REMINDED TO NOTIFY "MISS UTILITY" AT 1 (800) 552-7001 OR 1 (800) 552-7002 PRIOR TO ANY CONSTRUCTION IN THIS AREA.
11. IN ACCORDANCE WITH HANDICAP ACCESSIBILITY REQUIREMENTS, ALL APPLICABLE CODES AND REQUIREMENTS FOR ACCESSIBILITY FOR DISABLED PERSONS SHALL BE STRICTLY COMPLIED WITH.

WATER NOTES

1. ALL CONSTRUCTION MATERIALS AND INSTALLATION SHALL CONFORM TO THE LATEST EDITION OF THE DESIGN AND CONSTRUCTION STANDARDS MANUAL OF THE CITY OF HARRISONBURG.
2. CONTRACTOR SHALL INCLUDE IN APPLICABLE BID PRICE, COST OF LOCATING AND UNCOVERING ALL SEWER MANHOLES AND VALVE BOXES AFTER COMPLETION OF ALL PAVING AND TO ADJUST THEM TO THE FINAL ROAD GRADES. CONTRACTOR SHALL ALSO BE RESPONSIBLE FOR CLEANING OUT SEWER MAINS FOR FINAL INSPECTION, IF NECESSARY.
3. EXISTING UTILITIES ACROSS OR ALONG THE LINE OF THE PROPOSED WORK ARE SHOWN ONLY IN AN APPROXIMATE LOCATION ON THE PLANS. CONTRACTOR SHALL, ON HIS OWN INITIATIVE AND AT NO ADDITIONAL COST, LOCATE ALL UNDERGROUND LINES AND STRUCTURES AS NECESSARY. CONTRACTOR SHALL CALL "MISS UTILITY" @ 1-800-552-7001 PRIOR TO CONSTRUCTION. CONTRACTOR WILL BE RESPONSIBLE FOR ANY DAMAGE TO UNDERGROUND LINES OR STRUCTURES.
4. DATUM FOR ALL ELEVATIONS SHOWN IS NATIONAL GEODETIC SURVEY.
5. MINIMUM COVER OVER TOP OF WATER PIPE MUST BE 3.0 FEET.
6. SERVICE SADDLES MUST BE USED ON WATER CONNECTIONS TO P.V.C. MAINS LESS THAN 6" IN DIAMETER.
7. ENGINEER SHALL CERTIFY THAT UNPAVED STREETS ARE TO SUBGRADE PRIOR TO CONTRACTOR INSTALLING WATER SYSTEM. CURB AND GUTTER, IF REQUIRED, SHALL BE INSTALLED PRIOR TO ACCEPTANCE OF WATER SYSTEM.
8. NO STRUCTURES OR PLANTING OF TREES SHALL BE PERMITTED IN UTILITY EASEMENTS.
9. VANDALPROOF COVERS SHALL BE USED ON ALL MANHOLES IN EASEMENTS. WATERTIGHT COVERS SHALL BE USED IN FLOOD PLAINS.
10. FINAL ACCEPTANCE BY THE CITY OF HARRISONBURG SHALL NOT BE MADE UNTIL ALL WORK SHOWN ON APPROVED UTILITY PLANS IS COMPLETED INCLUDING PAVING, GRADING, AND ALL REQUIRED ADJUSTMENTS.
11. THE CITY OF HARRISONBURG WILL INSPECT ALL WATER AND SANITARY SEWER MAINS, CONNECTIONS, AND APPURTENANCES THERETO, AS SHOWN ON THE APPROVED UTILITY PLANS, LOCATED WITHIN DEDICATED EASEMENTS AND/OR PUBLIC RIGHTS-OF-WAY. FURTHERMORE, THE CITY OF HARRISONBURG WILL INSPECT ALL PRIVATE SEWER MAINS THROUGH THE LAST MANHOLE. ALL OTHER LINES TO BE INSTALLED ON SITE TO SERVE ROOF DRAINAGE, WATER SUPPLY. AND SANITARY SEWERS SHALL BE APPROVED BY THE DEPARTMENT OF BUILDING INSPECTION PRIOR TO INSTALLATION AND SHALL BE INSPECTED BY BUILDING INSPECTIONS BEFORE COVERING.
12. PVC PLASTIC PIPE SHALL MEET THE REQUIREMENTS OF 2006 IPC, TABLE 605.3, MEETING THE REQUIREMENTS OF ASTM D1785; ASTM D2241; ASTM D2672; CSA-B137.3.
13. DUCTILE IRON PIPE SHALL BE AWWA C-151 FOR PRESSURE AND THICKNESS CLASS SHOWN ON THE DRAWINGS. THICKNESS CLASSES SHALL MEET THE REQUIREMENTS OF AWWA C-150. ALL PIPE SHALL HAVE A CEMENT-MORTAR LINING ON THE INTERIOR AND AN ASPHALTIC SEAL COAT ON THE EXTERIOR. MINIMUM THICKNESS SHALL BE CLASS 52 FOR 12-INCH AND SMALLER, AND CLASS 51 FOR 16-INCH AND LARGER. ALL DUCTILE IRON PIPING SHALL HAVE MECHANICAL RESTRAINED JOINTS.
14. PRESSURE LINES SHALL BE INSTALLED WITH CLASS C-1 BEDDING.

SANITARY SEWER

1. PVC PLASTIC PIPE SHALL MEET REQUIREMENTS OF ASTM D-3034 TYPE PSM SDR-35 FOR SIZES 4-INCH THROUGH 15-INCH.
2. CAST IRON PIPE (D.I.) SHALL MEET THE REQUIREMENTS OF ASTM A74, ASTM A888, AND CISPI 301.
3. GRAVITY SEWER LINES SHALL BE INSTALLED WITH A MINIMUM OF 6 INCHES OF GRANULAR BEDDING (CLASS B).

SITE STORM SEWER

1. ALL STORM SEWER MATERIAL, JOINTS, AND INSTALLATION SHALL COMPLY WITH 2006 INTERNATIONAL PLUMBING CODE.
2. ALL CONCRETE STORM SEWER PIPE SHALL BE REINFORCED CONCRETE PIPE, CLASS III AND CONFORM TO ASTM C14 & C76. ALL RCP SHALL HAVE A CONCRETE JOINT WITH CONFINED O-RING GASKET OF RUBBER OR NEOPRENE CONFORMING TO ASTM C443 OR C1173.
3. ALL PVC USED FOR STORM SEWER AND ROOFDRAINS SHALL BE TYPE DWV SDR 35 PER ASTM D3034. PVC JOINTS SHALL BE EITHER MECHANICAL CONFORMING TO ASTM C1173 OR ASTM D3212, OR SOLVENT CEMENTED USING A PURPLE PRIMER PER ASTM F656 AND A SOLVENT CEMENT (NOT PURPLE) PER ASTM D2564. THE CONNECTION SHALL BE MADE WHILE THE SOLVENT CEMENT IS WET PER ASTM D2855.

EROSION & SEDIMENT CONTROL NARRATIVE

A. PROJECT DESCRIPTION
THE PROJECT CONSISTS OF THE RE-CONSTRUCTION OF APPROXIMATELY 28.26 ACRES OF RAMBLEWOOD PARK IN THE CITY OF HARRISONBURG, VIRGINIA. RAMBLEWOOD PARK CURRENTLY CONSISTS OF FOUR SOFTBALL FIELDS AND ASSOCIATED SITE FEATURE ON TOP OF AN OLD LANDFILL. THE LANDFILL WILL BE RECAPPED AFTER SITE DEMOLITION IS COMPLETE. THE FOUR SOFTBALL FIELDS WILL BE RE-CONSTRUCTED ON THE RECAPPED LANDFILL WITH SITE IMPROVEMENTS INCLUDING AN ASPHALT PARKING LOT AND DRIVE AISLES, ASPHALT PEDESTRIAN PATHS, RETAINING WALLS, A CONCESSION BUILDING, A MAINTENANCE BUILDING, RETRO-FITTING OF A STORMWATER MANAGEMENT FACILITY AND UTILITY INSTALLATION. UTILITIES INCLUDE A WATERLINE, A SANITARY LINE, ELECTRICAL LINES, TELEPHONE LINES, PARKING LOT & FIELD LIGHTING AND A STORM SEWER SYSTEM.
THE PROJECT IS ANTICIPATED TO BEGIN IN THE SUMMER OF 2013 AND BE COMPLETED PRIOR TO SPRING OF 2014.
THE PROJECT WILL HAVE A DISTURBED AREA OF APPROXIMATELY 28.26 ACRES AND ADD APPROXIMATELY 0.96 ACRES OF IMPERVIOUS AREA TO THE SITE.

B. EXISTING SITE CONDITIONS
THE PROPERTY IS 51.58 ACRES. THE PARCEL MOSTLY CONSISTS OF A LANDFILL WHICH IS BEING RE-CAPPED PER DEQ REQUIREMENTS. AS NOTED ABOVE, THE PORTION OF THE SITE BEING DISTURBED GENERALLY CONSIST OF EXISTING BALL FIELDS, PARKING LOT, MAINTENANCE BUILDING AND TRAILS. THE LAND GENERAL SLOPES SOUTH-SOUTHWEST TOWARD I-81 AND BLACKS RUN AT SLOPES BETWEEN 1% AND 50%. THE PROJECT AREA IS LOCATED IN THE NORTHWEST CORNER OF THE PARCEL.

C. ADJACENT PROPERTY
THE PROPERTY IS SURROUNDED BY INTERSTATE 81 ON THE WEST, BLACKS RUN ON THE SOUTH, AND RAMBLEWOOD ROAD ON THE NORTH AND EAST. ACROSS RAMBLEWOOD ROAD TO THE NORTH ARE SINGLE FAMILY HOMES CONNECTING TO PROPERTY IN ROCKINGHAM COUNTY.

D. PLANNED OFF SITE ACTIVITIES
FILL IS BEING BROUGHT INTO THE SITE FROM MULTIPLE AREAS IN THE HARRISONBURG AREA. EROSION AND SEDIMENT CONTROL FOR THE STOCK PILE AREAS WHERE THE MATERIAL IS ORIGINATING IS BEING PROVIDED BY OTHERS.

E. SOILS
THE HARRISONBURG LANDFILL IS LOCATED IN THE SOUTHEASTERN PART OF THE CITY OF HARRISONBURG, VA AND IS LOCATED WITHIN THE APPALACHIAN SECTION OF WEST-CENTRAL VIRGINIA.
THE SOIL UNIT THAT EXISTS AT THE SURFACE OF THE ENTIRE PROJECT AREA IS INDICATED IN THE NRCS NATIONAL COOPERATIVE SOIL SURVEY AS URBAN LAND. THIS IS BECAUSE THE LANDFILL COVER SOILS ARE NOT NATIVE TO THE SITE. THE DISTRIBUTION OF THE NATURAL SOILS SERIES AT THE REMAINDER OF THE LANDFILL SITE ARE FREDERICK AND LODI SILTY LOAM ASSOCIATIONS, WHICH ARE WELL DRAINED TO MODERATELY WELL DRAINED SOILS.

F. CRITICAL EROSION AREAS
THERE IS A FLOODPLAIN AREA IDENTIFIED ON THE SITE. DISTURBANCE TO THE AREA WILL BE MINIMIZED AND ANY SEDIMENT WILL BE CLEARED ON A REGULAR BASIS.
THE FILL ON THE LONG SLOPES TO THE SOUTH AND WEST OF THE BALL FIELDS WILL BE MONITORED FOR RILL EROSION. EROSION AND SEDIMENT CONTROL MEASURES ARE TO BE PROPERLY MAINTAINED AND THE AREAS IMMEDIATELY SEEDED.

G. EROSION AND SEDIMENT CONTROL MEASURES
UNLESS OTHERWISE INDICATED, ALL VEGETATIVE AND STRUCTURAL EROSION AND SEDIMENT CONTROL MEASURES SHALL BE CONSTRUCTED AND MAINTAINED ACCORDING TO THE LATEST STANDARDS AND SPECIFICATIONS OF THE VIRGINIA EROSION AND SEDIMENT CONTROL HANDBOOK. UNLESS WAIVED OR APPROVED BY LOCAL ADMINISTRATOR, THE MINIMUM STANDARDS OF VESCR SHALL APPLY.

H. STRUCTURAL PRACTICES
1. <u>TEMPORARY CONSTRUCTION ENTRANCE - 3.02</u>
A STONE PAD, LOCATED AT THE POINT OF VEHICULAR INGRESS AND EGRESS TO THE CONSTRUCTION SITE. THE PURPOSE IS TO PREVENT OR REDUCE THE AMOUNT OF MUD TRANSPORTED TO THE PUBLIC ROAD.
2. <u>SILT FENCING - 3.05</u>
SILT FENCE SEDIMENT BARRIERS WILL BE INSTALLED DOWN SLOPE OF GRADED AREAS TO FILTER SEDIMENT LADEN RUNOFF.
3. <u>INLET PROTECTION - 3.07</u>
INLET PROTECTION SHALL BE INSTALLED ON ALL INLETS AS THEY ARE INSTALLED TO FILTER SEDIMENT LADEN RUNOFF BEFORE ENTERING STORM DRAIN INLETS AND PIPING SYSTEMS.
4. <u>CULVERT INLET PROTECTION - 3.08</u>
A SEDIMENT FILTER LOCATED AT THE INLET TO STORM SEWER CULVERTS WHICH PREVENTS SEDIMENT FROM ENTERING, ACCUMULATING IN AND BEING TRANSFERRED BY THE CULVERT.
5. <u>TEMPORARY DIVERSION DIKE - 3.09</u>
TEMPORARY RIDGE OF COMPACTED SOIL TO DIVERT SEDIMENT-LADEN RUNOFF FROM A DISTURBED AREA TO A SEDIMENT-TRAPPING FACILITY OR CLEAN RUNOFF AROUND DISTURBED AREAS.
6. <u>TEMPORARY SEDIMENT BASIN - 3.14</u>
A TEMPORARY BASIN WITH A CONTROLLED STORMWATER RELEASE STRUCTURE. IT IS USED TO DETAIN SEDIMENT-LADEN RUNOFF FROM DRAINAGE AREAS 3 ACRES OR GREATER FOR ENOUGH TIME TO ALLOW MOST FOR THE SUSPENDED SOLIDS TO SETTLE OUT.
7. <u>STORMWATER CONVEYANCE CHANNEL - 3.17</u>
A PERMANENT CHANNEL LINED WITH APPROPRIATE VEGETATION OR RIPRAP TO SAFELY CONVEY STORMWATER RUNOFF WITHOUT DAMAGE FROM EROSION.
8. <u>OUTLET PROTECTION - 3.18</u>
RIP RAP APRONS PLACED AT THE OUTLETS OF PIPES OR CHANNELS TO PREVENT SCOUR AT STORM DRAIN OUTLETS, TO PROTECT THE OUTLET STRUCTURE AND TO MINIMIZE THE POTENTIAL FOR DOWNSTREAM EROSION BY REDUCING THE VELOCITY AND ENERGY OF CONCENTRATED STORMWATER FLOWS.
9. <u>RIPRAP - 3.19</u>
A PERMANENT, EROSION RESISTANT GROUND COVER OF LARGE, LOOSE, ANGULAR STONE INSTALLED TO PROTECT SOILS WHICH MAY ERODE UNDER DESIGN FLOW CONDITIONS.
10. <u>ROCK CHECK DAM - 3.20</u>
TEMPORARY STONE DAM PLACE IN AN AREA OF CONCENTRATED RUNOFF TO SLOW THE VELOCITY OF THE RUNOFF AND TO FILTER SEDIMENT FROM THE RUNOFF.
11. <u>SURFACE ROUGHENING - 3.29</u>
GRADING PRACTICE SUCH AS STAIR STEPPING OR GROOVING SLOPES OR LEAVE SLOPES IN ROUGHENED CONDITION BY NOT FINE-GRADING THEM. REDUCES RUNOFF VELOCITY, PROVIDES SEDIMENT TRAPPING AND INCREASES INFILTRATION, ALL OF WHICH FACILITATE ESTABLISHMENT OF VEGETATION ON EXPOSED SLOPES. APPLICABLE FOR ALL SLOPES GREATER THAN 3:1 OR FILL SLOPES WHICH WILL NOT BE STABILIZED IMMEDIATELY.
12. <u>SOIL STABILIZATION BLANKETS AND MATTING - 3.36</u>
THE INSTALLATION OF SOIL STABILIZATION MATS ON A STEEP SLOPE TO HELP ESTABLISH VEGETATION AND PREVENT EROSION.
13. <u>TREE PRESERVATION AND PROTECTION - 3.38</u>
FENCES INSTALLED TO PROTECT EXISTING TREES FROM INJURY DURING LAND-DISTURBING AND CONSTRUCTION ACTIVITY.
14. <u>DUST CONTROL - 3.39</u>
DUST CONTROL MEASURES SHALL BE USED OVER THE WHOLE SITE TO REDUCE SURFACE AND AIR MOVEMENT OF DUST DURING LAND DISTURBANCE, DEMOLITION, AND CONSTRUCTION ACTIVITIES.

I. VEGETATIVE PRACTICES
GENERAL: A PERMANENT VEGETATIVE COVER SHALL BE ESTABLISHED ON DENUDED AREAS NOT OTHERWISE PERMANENTLY STABILIZED BY CONCRETE OR PAVEMENT. PERMANENT VEGETATION SHALL NOT BE CONSIDERED ESTABLISHED UNTIL A GROUND COVER IS ACHIEVED THAT IS UNIFORM, MATURE ENOUGH TO SURVIVE AND WILL INHIBIT EROSION. NEW VEGETATION SHALL BE MAINTAINED FOR ONE FULL YEAR AFTER PLANTING. NEW SEEDING SHALL BE SUPPLIED WITH ADEQUATE MOISTURE, ESPECIALLY LATE IN THE SEASON, AND IN ABNORMALLY HOT OR DRY WEATHER. STABILIZATION PRACTICES SHALL BE ACCOMPLISHED IN ACCORDANCE WITH THE APPROPRIATE VESCH STD. & SPEC. AND AS PER THE EROSION AND SEDIMENT CONTROL PLAN. SELECTION OF THE APPROPRIATE SEED MIXTURE FOR TEMPORARY SEEDING WILL DEPEND UPON THE TIME OF YEAR IT IS APPLIED.
1. <u>TOPSOILING - 3.30</u>
PRESERVING AND USING TOPSOIL TO PROVIDE A SUITABLE GROWTH MEDIUM FOR VEGETATION USED TO STABILIZE DISTURBED AREAS. SIX INCHES SHALL BE APPLIED TO THE BALL FIELDS AND TWO INCHES TO ALL OTHER VEGETATED AREAS.
2. <u>TEMPORARY SEEDING - 3.31</u>
TEMPORARY SEEDING SHALL BE APPLIED OVER CLEARED AREAS THAT WILL NOT BE BROUGHT TO FINAL GRADE WITHIN 30 DAYS. TEMPORARY SEEDING MIXES SHALL BE AS DESCRIBED IN VESCH STD. & SPEC. 3.31.
   - SEQUENCE OF INSTALLATION: WHEN CLEARED AREAS WILL NOT BE BROUGHT TO FINAL GRADE WITHIN 30 DAYS
   - MAINTENANCE: REFER TO STD. & SPEC. 3.31; AREAS WHICH FAIL TO ESTABLISH VEGETATIVE COVER ADEQUATE TO PREVENT RILL EROSION ARE TO BE RESEEDED.
   - REMOVAL EVENT: AS NEEDED FOR FINAL GRADING.
3. <u>PERMANENT SEEDING - 3.32</u>
USED ON ALL AREAS AT FINAL GRADE AND WILL NOT RECEIVE HARDSCAPE OR OTHER LANDSCAPE. REFER TO PLANS AND PROJECT SPECIFICATIONS FOR FINAL SEED MIXES. PERMANENT SEEDING SHALL ALSO BE USED ON ALL AREAS THAT ARE NOT AT FINAL GRADE AND THAT WILL BE LEFT DORMANT FOR A PERIOD OF MORE THAN 1 YEAR. DORMANT AREAS SHALL MEET THE REQUIREMENTS OF VESCH STD. & SPEC. 3.32. PERMANENT SEEDING MIXES AND RATES SHALL BE PER THE PLANS AND SPECIFICATIONS.
   - SEQUENCE OF INSTALLATION: WITHIN 7 DAYS OF ACHIEVING FINAL GRADE
   - SOIL TESTING REQUIREMENTS: REFER TO STD. & SPEC. 3.32
   - MAINTENANCE: REFER TO STD. & SPEC. 3.32; AREAS WHICH FAIL TO ESTABLISH VEGETATIVE COVER ADEQUATE TO PREVENT RILL EROSION ARE TO BE IMMEDIATELY RESEEDED, FOLLOWING IDENTIFICATION OF THE CAUSE OF POOR GERMINATION.
4. <u>MULCHING - 3.35</u>
APPLICATION OF PLANT RESIDUES OR OTHER SUITABLE MATERIALS TO THE SOIL SURFACE TO PREVENT EROSION BY PROTECTING THE SOIL SURFACE FROM RAINDROP IMPACT AND REDUCING THE VELOCITY OF OVERLAND FLOW. IT IS ALSO USED TO FOSTER THE GROWTH OF VEGETATION BY INCREASING AVAILABLE MOISTURE AND PROVIDING INSULATION AGAINST EXTREME HEAT AND COLD.
5. <u>BLANKET MATTING - 3.35</u>
PROTECTIVE MATTING INSTALLED ON SLOPES TO ALLOW SEEDING TO BE ESTABLISHED BEFORE IT WASHES AWAY. ALSO USED IN CHANNELS TO ALLOW FOR HIGHER VELOCITIES OF FLOW WITHOUT CAUSING EROSION.

J. PERMANENT STABILIZATION
ALL AREAS WITHIN THE LIMITS OF DISTURBANCE SHALL BE STABILIZED WITH PERMANENT SEEDING, LANDSCAPING, OR PAVEMENT FOLLOWING THE FINAL GRADING.

K. CONSTRUCTION SCHEDULE
1. A PRE-CONSTRUCTION CONFERENCE WILL BE REQUIRED. CONTACT THE CITY OF HARRISONBURG TO COORDINATE.
2. THE CONTRACTOR IS RESPONSIBLE FOR OBTAINING ALL APPLICABLE PERMITS.
3. PRIOR TO ANY LAND DISTURBING ACTIVITY, CONTRACTOR SHALL PROVIDE THE NAME, CERTIFICATION INFORMATION, AND CONTACT INFORMATION OF THE DESIGNATED RESPONSIBLE LAND DISTURBER (RLD) TO THE CITY.
4. ALL ITEMS OF WORK NECESSARY TO COMPLETE THIS PROJECT SHALL BE IN COMPLIANCE WITH ALL FEDERAL, STATE AND LOCAL CODES.
NOTE: SKIP TO STEP 7 IF PHASE 1 (FIELDS 1&4) ARE ALREADY COMPLETED.
5. INITIAL EROSION AND SEDIMENT CONTROL MEASURES AND LANDFILL CAP INSTALLATION
   a. MAINTAIN ALL PERIMETER EROSION AND SEDIMENT CONTROL MEASURES WHICH WERE INSTALLED IN PREVIOUSLY BY OTHERS. INSPECT ALL MEASURE TO ENSURE THEY MEET THE REQUIREMENTS OF THE PLAN AND THE EROSION AND SEDIMENT CONTROL HANDBOOK. EROSION AND SEDIMENTATION CONTROLS SHALL BE MAINTAINED UNTIL UPSTREAM VEGETATIVE COVER IS ESTABLISHED.
   b. INSTALL CONSTRUCTION ENTRANCES WHICH HAVE NOT BEEN INSTALLED. DISTURB THE MINIMUM AREA NEEDED TO INSTALL THE ENTRANCE.
   c. INSTALL PERIMETER SILT FENCE AND TREE PROTECTION AS SHOWN.
   d. RE-GRADE SEDIMENT BASIN AS SHOWN. REMOVE EXISTING OUTLET STRUCTURE AND PIPE AND INSTALL NEW PERMANENT OUTLET STRUCTURE AND PIPING. RECONFIGURE OUTLET PROTECTION AS NEEDED BUT MINIMIZE DISTURBANCE DOWNSTREAM OF BASIN BERM. IMMEDIATELY SEED AND MULCH ALL DISTURBED AREAS.
   e. INSTALL PERIMETER DIVERSION DIKES AND CULVERT INLET PROTECTION WHICH HAVE NOT BEEN INSTALLED. VERIFY EXISTING DIVERSION DIKES ARE AT LEAST 18" HIGH.
   f. VERIFY ALL EXISTING CHANNELS MEET THE MINIMUM DIMENSIONS OF THE DETAILED SECTIONS. IF CHANNELS HAVE RIP-RAP, VERIFY THE RIP-RAP IS ADEQUATE.
   g. INSTALL CHECK DAMS IN ALL ON-SITE CHANNELS.
   h. AFTER ALL INITIAL EROSION CONTROL FEATURES HAVE BEEN VERIFIED AND/OR INSTALLED, CONTINUE DEMOLITION AND CLEARING OF THE SITE.
   i. ALL EXCAVATED MATERIAL AND DEBRIS SHALL BE STOCKPILED OR DISPOSED OF IN A LAWFUL MANNER. DCR IS TO BE NOTIFIED PRIOR TO ANY HAULING TO OR FROM ANY OFFSITE BORROW OR WASTE AREA. STOCKPILES SHALL BE SURROUNDED BY SILT FENCE AND SEEDED AS REQUIRED.
   j. VERIFY EXISTING GRADES ON THE SITE. MAKE ANY CHANGES REQUIRED TO BRING THE ELEVATIONS TO THE LANDFILL CAP ELEVATION.
   k. TEMPORARY SEED AND MULCH AS GRADING PROGRESSES, IF NECESSARY.
   l. AS FILL IS PLACED, INSTALL DIVERSION MEASURES ACROSS THE FILL AREAS AS NEEDED TO PREVENT RILL EROSION FROM OCCURRING. ENSURE ALL RUNOFF IS ULTIMATELY DIVERTED TO THE SEDIMENT BASIN. MOVE AND ADJUST DIVERSION MEASURES AS FILL CONTINUES.
   m. INSTALL LANDFILL CAP WHEN DESIRED GRADE IS ACHIEVED.
   n. THROUGHOUT DEMOLITION & CONSTRUCTION ACTIVITIES, APPLY DUST CONTROL MEASURES ACCORDING TO VESCH STD. & SPEC. 3.39. ANY AND ALL MATERIAL OR DEBRIS TRACKED ONTO A PUBLIC OR PRIVATE ROAD SURFACE WILL BE CLEANED THOROUGHLY AT THE END OF EACH DAY. SEDIMENT SHALL BE REMOVED FROM ROADS BY SHOVELING OR SWEEPING AND BE TRANSPORTED TO A SEDIMENT CONTROLLED DISPOSAL AREA.
6. PHASE 1 - FINAL GRADING AND SITE IMPROVEMENTS -- FIELDS 1&4
   a. MAINTAIN ALL PERIMETER EROSION AND SEDIMENT CONTROL MEASURES FROM PREVIOUS PHASES AS SHOWN ON THE PLANS. AS FILL AND CONSTRUCTION PROGRESSES, SOME MEASURE WILL NEED TO BE MOVED AND ADJUSTED. EROSION AND SEDIMENTATION CONTROLS SHALL BE MAINTAINED UNTIL UPSTREAM VEGETATIVE COVER IS ESTABLISHED.
   b. BEGIN TO PLACE FILL OVER LANDFILL CAP. (THE CAP SHALL HAVE A MINIMUM TWO FEET OF COVER IN ALL LOCATIONS AT THE END OF PHASE 1.)
   c. INSTALL SIMILAR DIVERSION MEASURES ACROSS FILL AREAS AS NEEDED TO PREVENT RILL EROSION FROM OCCURRING. CONTINUE TO ENSURE ALL RUNOFF FROM THE DISTURBED AREA (EXCLUDING PARKING LOT) IS DIVERTED TO THE SEDIMENT BASIN.
   d. MAINTAIN RIP RAP CHANNELS DOWN SOUTH SLOPES TO BASIN. ADJUST AS FILL PROGRESSES.
   e. USE SURFACE ROUGHING THROUGHOUT FILL ACTIVITIES TO HELP PREVENT RILL EROSION ALONG LONG, DISTURBED SLOPES.
   f. CONSTRUCT STORMWATER CONVEYANCE CHANNELS. IMMEDIATELY SEED (OR INSTALL RIP-RAP OR MATTING IN) CONVEYANCE CHANNELS AND INSTALL CHECK DAMS AS ARE THEY ARE BROUGHT TO FINAL GRADE.
   g. INSTALL CHANNELS FROM STORM SEWER OUTLETS TO CONNECT TO EXISTING CHANNELS. THESE CHANNELS WILL REMAIN OPERATIONAL UNTIL STORM SEWER IS COMPLETED IN PHASE 2.
   h. BEGIN STORM SEWER INSTALLATION. INSTALL STORM DRAIN INLET PROTECTION AS INLETS ARE INSTALLED, CULVERT INLET PROTECTION AS CULVERTS ARE INSTALLED AND OUTLET PROTECTION PRIOR TO STORM PIPES RECEIVING RUNOFF.
   i. INSTALL ADDITIONAL EROSION AND SEDIMENT CONTROL MEASURES AS SHOWN ON THE PLANS AND AS DEEMED NECESSARY BY THE RLD, ENGINEER OR THE CITY.
   j. PROCEED WITH INSTALLATION OF ADDITIONAL UTILITIES AND HARDSCAPES INCLUDING PARKING LOT AND WALKS.
   k. INSTALL CONSTRUCTION ENTRANCE TO BE USED THROUGH PHASE 2 CONSTRUCTION AT WEST END OF PARKING LOT.
   l. APPLY TOPSOIL, PERMANENT SEEDING AND STRAW MULCHING TO ALL AREAS WITHIN THE LIMITS OF DISTURBANCE OUTSIDE OF THE HARDSCAPE AND MULCHED LANDSCAPED AREAS. APPLY BLANKET MATTING TO ALL SLOPES GREATER THAN 3:1.
   m. MUCK SEDIMENT BASIN TO ORIGINAL ELEVATIONS.
NOTE: SKIP TO STEP 9. PHASE 2 WILL BE COMPLETED UNDER A DIFFERENT CONTRACT.
7. PHASE 2 - FINAL GRADING AND SITE IMPROVEMENTS -- FIELDS 2&3
   a. INSPECT CONSTRUCTION ENTRANCE, CONVEYANCE CHANNELS AND SEDIMENT BASIN (WHICH SHOULD HAVE REMAINED FROM PHASE 1). MAKE ANY IMPROVEMENTS NECESSARY TO MEET THE DETAILS ON THE PLANS OR THE SPECIFICATIONS OF THE EROSION AND SEDIMENT CONTROL HANDBOOK.
   b. MUCK SEDIMENT BASIN TO ORIGINAL DESIGN ELEVATIONS.
   c. INSTALL PERIMETER EROSION AND SEDIMENT CONTROL MEASURES INCLUDING SILT FENCE, DIVERSION DIKES AND TREE PROTECTION. EROSION AND SEDIMENTATION CONTROLS SHALL BE MAINTAINED UNTIL UPSTREAM VEGETATIVE COVER IS ESTABLISHED.
   d. REMOVE EXISTING VEGETATION AND BEGIN TO PLACE FILL.
   e. INSTALL DIVERSION MEASURES ACROSS FILL AREAS AS NEEDED TO PREVENT RILL EROSION FROM OCCURRING. ENSURE ALL RUNOFF FROM THE DISTURBED AREA (EXCLUDING PARKING LOT) IS DIVERTED TO THE SEDIMENT BASIN.
   f. INSTALL/MAINTAIN ONSITE CHANNELS AS SHOWN. AS FILL AND CONSTRUCTION PROGRESSES, SOME MEASURE WILL NEED TO BE MOVED AND ADJUSTED. IMMEDIATELY SEED CONVEYANCE CHANNELS AND INSTALL CHECK DAMS AS ARE THEY ARE BROUGHT TO FINAL GRADE.
   g. USE SURFACE ROUGHING THROUGHOUT FILL ACTIVITIES TO HELP PREVENT RILL EROSION ALONG LONG, DISTURBED SLOPES.
   h. BEGIN STORM SEWER INSTALLATION. INSTALL STORM DRAIN INLET PROTECTION AS INLETS ARE INSTALLED, CULVERT INLET PROTECTION AS CULVERTS ARE INSTALLED AND OUTLET PROTECTION PRIOR TO STORM PIPES RECEIVING RUNOFF.
   i. INSTALL ADDITIONAL EROSION AND SEDIMENT CONTROL MEASURES AS SHOWN ON THE PLANS AND AS DEEMED NECESSARY BY THE RLD, ENGINEER OR THE CITY.
   j. PROCEED WITH INSTALLATION OF ADDITIONAL UTILITIES AND HARDSCAPES.
   k. APPLY TOPSOIL, PERMANENT SEEDING AND STRAW MULCHING TO ALL AREAS WITHIN THE LIMITS OF DISTURBANCE, OUTSIDE OF THE HARDSCAPE AND MULCHED LANDSCAPED AREAS. APPLY BLANKET MATTING TO ALL SLOPES GREATER THAN 3:1.
8. STORMWATER MANAGEMENT DETENTION BASIN
   b. ONCE ALL UPSTREAM AREAS HAVE BEEN STABILIZED AND HAVE WELL ESTABLISHED VEGETATION, NOTIFY THE INSPECTORS FOR AN INSPECTION.
   c. ONCE THE INSPECTOR GIVES APPROVAL, THE SEDIMENT BASIN MAY BE CONVERTED TO THE FINAL STORMWATER MANAGEMENT BASIN. PERIMETER EROSION CONTROL MEASURES NOT ASSOCIATED WITH THE BASIN SHALL BE REMOVED.
   d. MUCK SEDIMENT BASIN AND RE-GRADE AS SHOWN ON PLANS.
   e. MODIFY OUTLET STRUCTURE AS SHOWN IN DETAILS.
   f. ONCE FINAL GRADES HAVE BEEN ACHIEVED, IMMEDIATELY APPLY PERMANENT SEEDING AND STRAW MULCH.
9. CONTACT THE INSPECTORS FOR A FINAL SITE INSPECTION. MAKE ANY ADJUSTMENTS REQUIRED.
10. AFTER ALL CONSTRUCTION IS COMPLETE AND ALL AREAS HAVE BEEN STABILIZED, ANY REMAINING SEDIMENT AND EROSION CONTROL MEASURES SHALL BE REMOVED WITHIN 30 DAYS. ALL STORMWATER PIPES, STRUCTURES AND CHANNELS SHALL BE CLEANED OF ALL SEDIMENT BUILD UP.
11. REMOVE ALL EQUIPMENT, CONSTRUCTION MATERIALS AND DEBRIS FROM THE SITE.

L. MAINTENANCE
PRIOR TO ANY LAND DISTURBING ACTIVITY, CONTRACTOR SHALL PROVIDE THE NAME, CERTIFICATION INFORMATION, AND CONTACT INFORMATION OF THE DESIGNATED RESPONSIBLE LAND DISTURBER (RLD) TO THE CITY OF HARRISONBURG.
IN GENERAL, ALL EROSION AND SEDIMENT CONTROL MEASURES WILL BE CHECKED AT LEAST EVERY TWO WEEKS AND/OR AFTER EACH SIGNIFICANT RAINFALL. DURING CONSTRUCTION, THE CONTRACTOR'S DESIGNATED RLD WILL BE RESPONSIBLE FOR INSPECTING AND REPAIRING DAMAGED EROSION/SEDIMENT CONTROL MEASURES. THE FOLLOWING ITEMS WILL BE CHECKED IN PARTICULAR:
1. THE SILT FENCE BARRIER WILL BE CHECKED FOR UNDERMINING OR DETERIORATION OF THE FABRIC. SEDIMENT SHALL BE REMOVED WHEN THE LEVEL OF SEDIMENT DEPOSITION REACHES HALF WAY TO TOP OF BARRIER.
2. THE SEDIMENT BASIN SHALL BE CHECK REGULARLY TO ENSURE OUTFALL STRUCTURE IS WORKING PROPERLY AND THE BANKS HAVE A HEALTHY STAND OF VEGETATION. THE BASIN SHALL BE MUCKED WHEN SEDIMENT REACHES HALF OF THE WET STORAGE VOLUME.
3. DIVERSION DIKES AND CHANNELS SHALL BE INSPECTED TO ENSURE THEY SHOW NO SIGNS OF EROSION OR DEGRADATION.
4. THE SEEDED AREAS WILL BE CHECKED REGULARLY TO ENSURE THAT A GOOD STAND IS MAINTAINED. AREAS SHOULD BE FERTILIZED AND RESEEDED AS NEEDED. REFER TO ESC TECHNICAL BULLETIN #4.
5. PROVIDE REMEDIAL STABILIZATION AND SEEDING FOR A PERIOD OF ONE YEAR AFTER CONSTRUCTION.

STORMWATER MANAGEMENT NARRATIVE

A. STORMWATER MANAGEMENT OVERVIEW
THE RUNOFF FOR THE SITE GENERALLY FLOWS TO THE SOUTH-SOUTHWEST TOWARDS BLACKS RUN. THE PROJECT LIMITS ARE APPROXIMATELY 28 ACRES. THE MAJORITY OF THE SITE RUNS DIRECTLY INTO THE CREEK ADJACENT TO THE SITE. A SMALL PORTION OF THE NORTHWEST CORNER OF THE SITE FLOWS UNDER INTERSTATE 81 IN A CULVERT, INTO A CHANNEL FROM APPROXIMATELY 1,500 FEET BEFORE DISCHARGING INTO BLACKS RUN. BLACKS RUN THEN FLOWS BACK UNDER INTERSTATE 81 AND PAST THE SITE. THEREFORE, THE ENTIRE 28 ACRES OF SITE RUNOFF EVENTUALLY ENDS UP IN BLACKS RUN. THE OVERALL DRAINAGE AREA OF BLACKS RUN TO A POINT JUST DOWNSTREAM OF THE PROJECT AREA IS APPROXIMATELY 8,600 ACRES.
THE RUNOFF FROM RAMBLEWOOD ROAD AND THE PARKING LOT IS PICKED UP IN A ROADSIDE DITCH AND STORM SEWER SYSTEM. THIS WILL OUTFALL INTO A CHANNEL FLOWING NORTH TO SOUTH ALONG THE EDGE OF THE PROPERTY AND DIRECTLY INTO BLACKS RUN. THE MAJORITY OF THE BALL FIELDS WILL BE PICKED UP IN AN ONSITE STORM SEWER SYSTEM AND TAKEN TO THE STORMWATER MANAGEMENT BASIN.
<u>CALCULATIONS</u>
DRAINAGE CALCULATIONS FOR WERE PERFORMED IN THE 'HYDRAFLOW HYDROGRAPHS' PROGRAM USING THE SCS METHOD. THE SOILS ONSITE WERE ASSUMED TO BE HYDROLOGIC GROUP C. CURVE NUMBERS (CN) WERE BASED ON 98 FOR ALL IMPERVIOUS AREAS, 79 FOR OPEN SPACE (PERVIOUS AREAS) IN FAIR CONDITION (USED FOR ALL POST DEVELOPED) AND 74 FOR OPEN SPACE (PERVIOUS AREAS) IN GOOD CONDITION (USED FOR ALL PRE DEVELOPED). TIME OF CONCENTRATION WAS COMPUTED USING THE TR-55 METHOD. DRAINAGE AREAS WITH TIME OF CONCENTRATIONS LESS THAN FIVE MINUTES WERE DEFAULTED TO FIVE MINUTES. REFER TO APPENDIX A-1 FOR DRAINAGE AREA CALCULATIONS.
RAINFALL VALUES WERE BASED ON VDOT'S ADOPTION AND IMPLEMENTATION OF NOAA ATLAS 14 FOR RAINFALL PRECIPITATION FREQUENCY DATA FOR HARRISONBURG, VIRGINIA.
WATER QUALITY ANALYSIS WAS BASED ON THE PERFORMANCE BASED WATER QUALITY CALCULATIONS IN ACCORDANCE WITH THE VIRGINIA STORMWATER MANAGEMENT HANDBOOK. REFER TO APPENDIX A-2 FOR THE WATER QUALITY SPREADSHEETS.
CHANNEL ADEQUACY CALCULATIONS WERE COMPLETED USING THE 'HYDRAFLOW EXPRESS' PROGRAM. PLEASE SEE APPENDIX A-3 FOR ALL CHANNEL CALCULATIONS. THE CHANNELS ARE SIZED FOR THE 10 YEAR STORM WITH NON-EROSIVE VELOCITIES. A MANNING'S N-VALUE OF 0.034 WAS USED FOR GRASS LINED CHANNELS AND 0.035 FOR RIPRAP CHANNELS.
THE STORM SEWER SYSTEM WAS RUN IN THE 'HYDRAFLOW STORM SEWER' PROGRAM TO DETERMINE ADEQUACY. PLEASE SEE APPENDIX B FOR ALL PIPE AND INLET CALCULATIONS. PIPES WERE SIZED SUCH THAT THE HGL IN THE TEN YEAR STORM WAS BELOW THE TOPS OF ALL PROPOSED STRUCTURES.

B. WATER QUALITY ANALYSIS
WATER QUALITY ANALYSIS WAS PERFORMED FOR THE SITE USING THE PERFORMANCE BASED WATER QUALITY CALCULATIONS. THE APPLICABLE AREA IS THE LIMITS OF DISTURBANCE, 28.26 ACRES. CONSTRUCTION RESULTS IN A TOTAL IMPERVIOUS AREA OF 2.86 ACRES (10%) IN THE POST DEVELOPED CONDITION. BASED ON THIS, SITUATION ONE APPLIES. THE PERFORMANCE BASED WATER QUALITY CALCULATION SITUATION ONE CONSISTS OF LAND DEVELOPMENT WHERE THE EXISTING PERCENT IMPERVIOUS COVER IS LESS THAN OR EQUAL TO THE AVERAGE LAND COVER CONDITION AND THE PROPOSED IMPROVEMENTS WILL CREATE A TOTAL PERCENT IMPERVIOUS COVER WHICH IS LESS THAN THE AVERAGE LAND COVER CONDITION. A DEFAULT VALUE OF 16% IMPERVIOUS IS USED FOR THE AVERAGE WATERSHED. THIS RESULTS IN NO REQUIRED REDUCTION IN THE POST DEVELOPMENT POLLUTANT DISCHARGE.

C. WATER QUANTITY ANALYSIS
THE TOTAL DRAINAGE AREA ANALYZED IN THE PRE AND POST DEVELOPED CONDITIONS IS 36.11 ACRES. THIS INCLUDES THE PROJECT AREA AND THE UPSTREAM RUNOFF WHICH FLOWS ONTO THE SITE. AN EXTENDED DETENTION BASIN IS USED TO REDUCE THE PEAK FLOW RATE FROM THE SITE IN THE POST DEVELOPED CONDITION. THE RESULTS OF THE OVERALL ANALYSIS CAN BE FOUND IN THE ROUTING CALCULATIONS IN APPENDIX A-1.
DRAINAGE AREAS 1 AND 2, WHICH DRAIN TO CULVERTS UNDER INTERSTATE 81, HAVE A SIGNIFICANT REDUCTION IN THEIR PEAK FLOW RATE IN THE POST DEVELOPED CONDITION BECAUSE LESS AREA IS FLOWING TO THE CULVERTS. THE MAJORITY OF THE SITE IS DIVERTED TO THE SOUTH TOWARD BLACKS RUN. DRAINAGE AREAS 3, 4 AND 5 ALL FLOW DIRECTLY INTO BLACKS RUN. THESE DRAINAGE AREAS ARE COMBINED TO COMPARE THE PRE DEVELOPED FLOW DIRECTLY INTO BLACKS RUN TO THE POST DEVELOPED FLOW. THE POST DEVELOPED FLOWS ARE SIGNIFICANTLY HIGHER BECAUSE OF THE ADDITIONAL IMPERVIOUS AREA WITHIN THE WATERSHED AND THE ADDITIONAL AREA BEING BROUGHT TO THE SOUTH.
THE TEMPORARY SEDIMENT BASIN WILL BE CONVERTED TO A PERMANENT STORMWATER BASIN TO REDUCE THE POST DEVELOPED 2 AND 10 PEAK FLOWS TO A VALUE LESS THAN THE PRE DEVELOPED CONDITION. THE EXISTING STORMWATER MANAGEMENT FACILITY IS PROPOSED TO BE REGRADED AND A NEW OUTFALL STRUCTURE WILL BE INSTALLED. THE OUTFALL STRUCTURE WILL CONTROL THE PEAK FLOW RATE FROM THE RUNOFF THROUGH THE USE OF MULTIPLE ORIFICES. THE TWO YEAR FLOW RATE IS REDUCED FROM 28.02 CFS TO 27.42 CFS AND THE TEN YEAR FLOW RATE IS REDUCED FROM 62.84 CFS TO 59.33 CFS. THE 100 YEAR STORM PASSES THROUGH THE BASIN WITH OVER ONE FOOT OF FREEBOARD.
THE OVERALL DRAINAGE AREA TO BLACKS RUN JUST DOWNSTREAM OF THE PROJECT IS APPROXIMATELY 8,600 ACRES. THIS IS GREATER THAN 100 TIMES THE PROJECT AREA OF 29 ACRES. THEREFORE MS-19 IS SATISFIED AND NO DOWNSTREAM CHANNEL ANALYSIS IS REQUIRED.

D. MAINTENANCE
THE CITY OF HARRISONBURG WILL BE RESPONSIBLE FOR ENSURING PROPER MAINTENANCE OF THE STORMWATER MANAGEMENT DETENTION BASIN. REFER TO THE BMP MAINTENANCE AGREEMENT IN THE STORMWATER MANAGEMENT HANDBOOK FOR ADDITIONAL INFORMATION.

GENERAL LEGEND

SEE SHEET C1.3 FOR SURVEY LEGEND

<u>PROPOSED</u>

- Limits of Disturbance
- 5' Contour (1310)
- 1' Contour (1304)
- Future 10' Contour (1330)
- Future 2' Contour (1324)
- Future Item
- New Tree Line
- Curb and Curb & Gutter
- Telephone Line (UGT)
- Waterline (1.5" W)
- Gate Valve
- Water Meter
- Sewer Sewer Lateral (4" SS)
- Sanitary Cleanout
- Storm Pipe
- Storm/Sanitary Manhole
- Storm End Section
- Storm Inlet
- Relocated Gas Vent/Valve
- Relocated Guy Wire
- Fence (X)
- Gate
- Sign
- HC Parking Symbol
- Concrete Wheel Stop
- Concrete Stairs
- Wall
- Ramp (12:1) w Handrails
- Light Duty Asphalt Pavement
- Heavy Duty Asphalt Pavement
- Concrete Ramp/Walk
- Building
- Rip-Rap/Stone
- Gravel
- Blanket Matting (In Channel)
- Softball Field
- Dirt Infield Mix
- Dugout

<u>LANDFILL CAP (& Background of Final)</u>

- Limits of Landfill Waste
- Final 10' Contour (1290)
- Final 2' Contour
- 10' Contour (Shown in Background of Final Phase) (1290)
- 2' Contour (Shown in Background of Final Phase)
- Floodway
- Floodplain
- Gas Surface Collector Trench
- Gas Surface Collector Header
- Toe Drain
- Limits of 40-mil LLDPE Cap
- Surface Collector Vent
- Gas Condensate Drain

COMMONWEALTH OF VIRGINIA
JULIA WALLACE SKARE
Lic. No. 43893
5/10/13
PROFESSIONAL ENGINEER

Draper Aden Associates
Engineering • Surveying • Environmental Services
Blacksburg, VA
Richmond, VA
Hampton Roads, VA
Charlottesville, VA
700 Harris Street, Suite E
Charlottesville, VA 22903
434-295-0700 Fax: 434-295-2105
www.daa.com

GENERAL NOTES AND LEGEND

RAMBLEWOOD PARK IMPROVEMENTS

RAMBLEWOOD PARK, HARRISONBURG, VIRGINIA

REVISIONS

DESIGNED BY:	JWS
DRAWN BY:	ECB
CHECKED BY:	GWC
SCALE:	NO SCALE
DATE:	MAY 10, 2013
PROJECT NUMBER:	06154-192CV

C0.1

P:\06100\06154\06154-192CV\CAD\06154-192CV_DSN\06154-192CV-NOTES.dwg May 10, 2013 3:12:41 PM

NOTES:

1. TOPOGRAPHIC CONTOURS BASED ON AERIAL PHOTOGRAPHY OBTAINED ON DECEMBER 11, 2011 AND COMPILED ON DECEMBER 22, 2011 BY LOUISA AERIAL SURVEYS, INC. MINERAL, VIRGINIA.
2. BOUNDARY LINE INFORMATION IS BASED ON A RECORDED PLAT TITLED "PLAT OF I.O. BERRY LAND TO BE CONVEYED TO CITY OF HARRISONBURG LOCATED AT SOUTHERN END OF CORPORATE LIMITS AND LYING ON THE SOUTH SIDE OF INTERSTATE 81, ROCKINGHAM COUNTY, VIRGINIA, SURVEYED BY JOHN E. DRIVER" DATED AUGUST.
3. ALL ADJACENT CITY PROPERTIES ARE ZONED R-1. ADJACENT ROCKINGHAM COUNTY PROPERTY IS ZONED A2.

PROPERTY OWNERHIP INFORMATION	ZONED
3-C-4 N/F ELIZABETH A. McKEEN 2124 RAMBLEWOOD ROAD	R-1
3-C-5 N/F VADIM K. & VASILY A. YAVNY 2130 RAMBLEWOOD ROAD	R-1
3-C-6 N/F GABRIELLA HERNANDEZ 2134 RAMBLEWOOD ROAD	R-1
3-C-7 N/F NICOLAS & NORMA J. LOPEZ-FLORES 2140 RAMBLEWOOD ROAD	R-1
3-C-8 N/F RICHARD E. & MARILOU CARPER 2144 RAMBLEWOOD ROAD	R-1
3-C-9 N/F MICHAEL J. & MOLLY VANHORN 2150 RAMBLEWOOD ROAD	R-1
3-C-10 N/F DONALD E. MUTERSPAUGH 2154 RAMBLEWOOD ROAD	R-1
3-C-11 N/F ADAM L. & CHRISTINA W. BLAGG 2160 RAMBLEWOOD ROAD	R-1
3-C-12 N/F ROBIN M. & LINDA S. ROBERTSON 2164 RAMBLEWOOD ROAD	R-1
3-C-13 N/F KATRINA L. HARRISON 2170 RAMBLEWOOD ROAD	R-1
3-C-14 N/F MICHAEL D. & MICHELLE L. SCIBANO 2174 RAMBLEWOOD ROAD	R-1
3-C-15 N/F REBECCA M. ARBAUGH 2180 RAMBLEWOOD ROAD	R-1
3-C-16 N/F JOSE JULIO & DORILA AYALA 2184 RAMBLEWOOD ROAD	R-1
3-D-1 N/F LANDON R. & PATSY L. CARRIER 2180 MINT SPRING ROAD	R-1
97-A-1 N/F ROBERT Z. & JUDITH H. HUFFMAN 2280 RAMBLEWOOD ROAD	R-1
97-A-2 N/F VADIM L. & NATALIE YAVNY 2260 RAMBLEWOOD ROAD	R-1
97-A-2A N/F LEONID & GALINA S. YAVNY ___ RAMBLEWOOD ROAD	R-1
97-A-3 N/F LINDA FAYE ROGERS 2310 RAMBLEWOOD ROAD	R-1
97-A-4 N/F AUBREY E. KEE 2350 RAMBLEWOOD ROAD	R-1
97-A-5A N/F DANNY & CAROLYN L. DAVIS 2360 RAMBLEWOOD ROAD	R-1
97-A-5 N/F PETER TATYANA CHEPELYUK 2370 RAMBLEWOOD ROAD	R-1
97-A-6 N/F CHARLES S. LUCK, III 2430 RAMBLEWOOD ROAD	R-1
97-B-1 N/F L. D. & DEBBIE T. GRAHAM 2455 RAMBLEWOOD ROAD	R-1
97-B-3 N/F BLAINE H., JR. & KAREN SMITH 2511 RAMBLEWOOD ROAD	R-1
3-B-1 N/F CITY OF HARRISONBURG 2155 BERRY ROAD	M-1
93-B-6 N/F CITY OF HARRISONBURG 2230 RAMBLEWOOD ROAD	R-3
97-E-2 N/F CITY OF HARRISONBURG 2375 RAMBLEWOOD ROAD	R-1
98-A-1 N/F CITY OF HARRISONBURG 1020 GREENDALE ROAD	R-1
124-(A)-L142 N/F VEPCO/DOMINION POWER 2240 RAMBLEWOOD ROAD	A-2 (ROCKINGHAM COUNTY)
124-(A)-L150A N/F CITY OF HARRISONBURG 2250 RAMBLEWOOD ROAD	A-2 (ROCKINGHAM COUNTY)

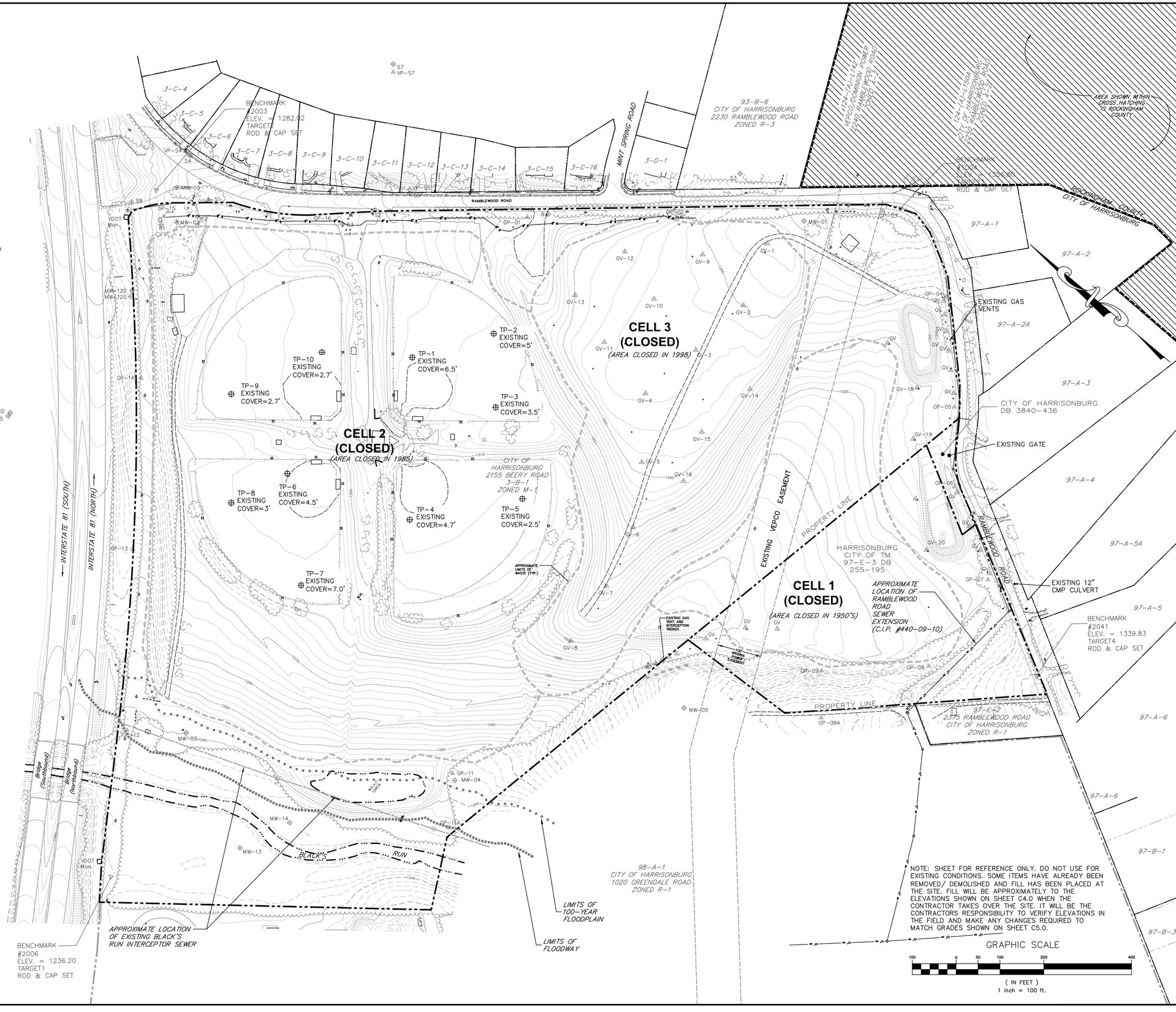

NOTE: SHEET FOR REFERENCE ONLY. DO NOT USE FOR EXISTING CONDITIONS. SOME ITEMS HAVE ALREADY BEEN REMOVED/ DEMOLISHED AND FILL HAS BEEN PLACED AT THE SITE. FILL WILL BE APPROXIMATELY TO THE ELEVATIONS SHOWN ON SHEET C4.0 WHEN THE CONTRACTOR TAKES OVER THE SITE. IT WILL BE THE CONTRACTORS RESPONSIBILITY TO VERIFY ELEVATIONS IN THE FIELD AND MAKE ANY CHANGES REQUIRED TO MATCH GRADES SHOWN ON SHEET C5.0.

COMMONWEALTH OF VIRGINIA
JULIA WALLACE SKARE
Lic. No. 43893
5/10/13
PROFESSIONAL ENGINEER

Draper Aden Associates
Engineering • Surveying • Environmental Services
Blacksburg, VA
Richmond, VA
Hampton Roads, VA
Charlottesville, VA
705 Pantops Center, Suite 105
Charlottesville, VA 22903
434-295-4700 Fax: 434-295-2105
www.dda.com

OVERALL EXISTING MAP (PRIOR TO FILL)

RAMBLEWOOD PARK IMPROVEMENTS

RAMBLEWOOD PARK, HARRISONBURG, VIRGINIA

REVISIONS

DESIGNED BY:	
DRAWN BY:	ECB
CHECKED BY:	WGH
SCALE:	1" = 100'
DATE:	MAY 10, 2013
PROJECT NUMBER:	06154-192CV

C1.0

NOTE: THE SURVEY NO LONGER REFLECTS THE CONDITIONS IN THE FIELD. SOME ITEMS HAVE ALREADY BEEN REMOVED/ DEMOLISHED AND FILL HAS BEEN PLACED AT THE SITE. FILL WILL BE APPROXIMATELY TO THE ELEVATIONS SHOWN ON SHEET C5.0 WHEN THE CONTRACTOR TAKES OVER THE SITE. IT WILL BE THE CONTRACTORS RESPONSIBILITY TO VERIFY ELEVATIONS IN THE FIELD AND MAKE ANY CHANGES REQUIRED TO MATCH GRADES SHOWN ON SHEET C4.0.

SEE C1.3 FOR SURVEY NOTES.

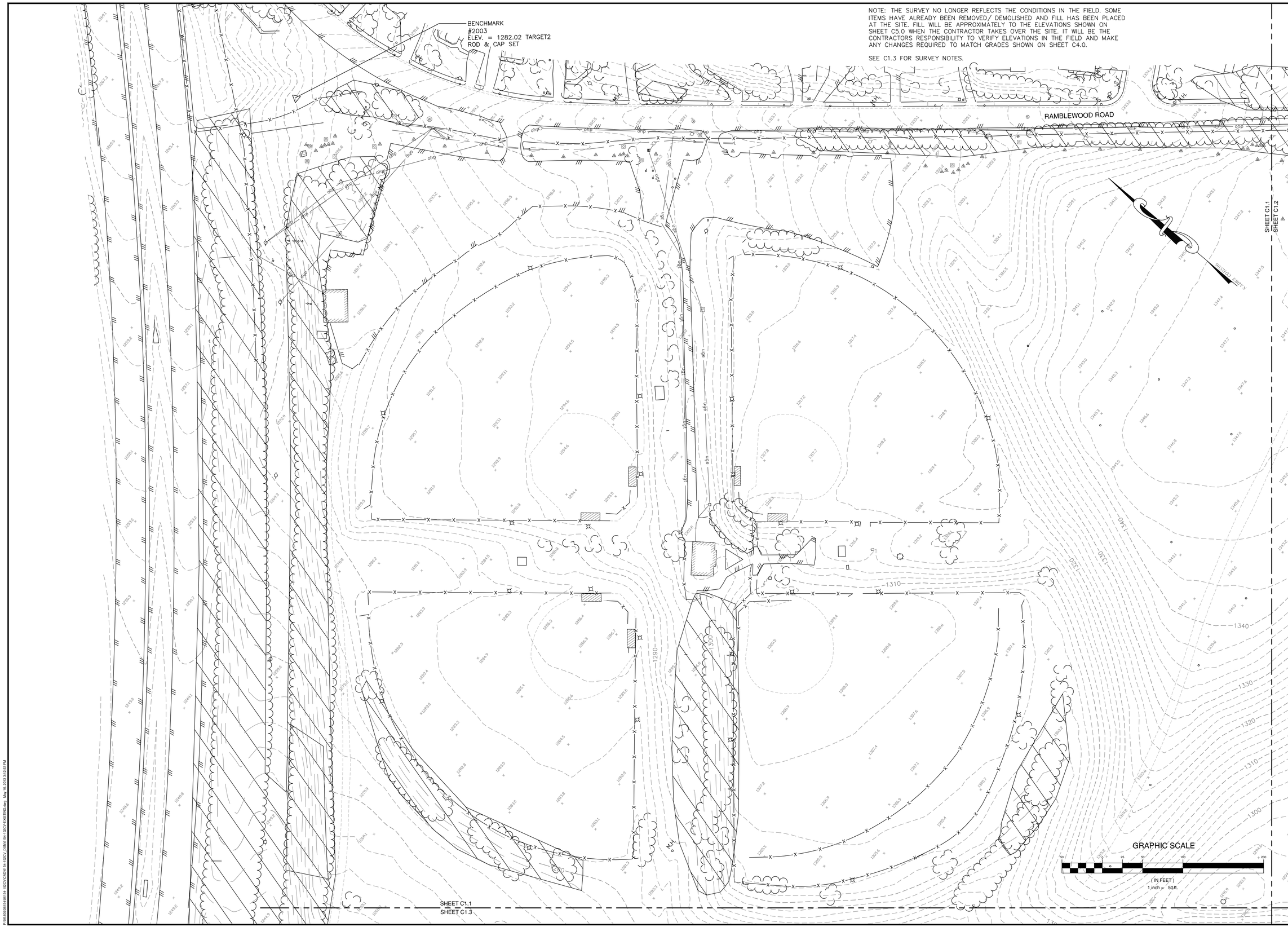

COMMONWEALTH OF VIRGINIA
CHERYL A. STOCKTON
Lic. No. 2425
5/10/13
LAND SURVEYOR

Draper Aden Associates
Engineering • Surveying • Environmental Services
Blacksburg, VA
Richmond, VA
Hampton Roads, VA
Charlottesville, VA
700 Harris Street, Suite B
Charlottesville, VA 22903
434-295-0700 Fax: 434-295-2105
www.das.com

TOPOGRAPHIC SURVEY - NORTHWEST

RAMBLEWOOD PARK IMPROVEMENTS

RAMBLEWOOD PARK, HARRISONBURG, VIRGINIA

REVISIONS

DESIGNED BY:	
DRAWN BY:	CAS
CHECKED BY:	NAO
SCALE:	1" = 50'
DATE:	MAY 10, 2013
PROJECT NUMBER:	06154-192CV

C1.1

NOTE: THE SURVEY NO LONGER REFLECTS THE CONDITIONS IN THE FIELD. SOME ITEMS HAVE ALREADY BEEN REMOVED/ DEMOLISHED AND FILL HAS BEEN PLACED AT THE SITE. FILL WILL BE APPROXIMATELY TO THE ELEVATIONS SHOWN ON SHEET C5.0 WHEN THE CONTRACTOR TAKES OVER THE SITE. IT WILL BE THE CONTRACTORS RESPONSIBILITY TO VERIFY ELEVATIONS IN THE FIELD AND MAKE ANY CHANGES REQUIRED TO MATCH GRADES SHOWN ON SHEET C4.0.

SEE C1.3 FOR SURVEY NOTES.

COMMONWEALTH OF VIRGINIA
CHERYL A. STOCKTON
Lic. No. 2425
5/10/13
LAND SURVEYOR

Draper Aden Associates
Engineering • Surveying • Environmental Services
Charlottesville, VA
700 Harris Street, Suite E
Charlottesville, VA 22903
434-295-0700 Fax: 434-295-2105
www.daa.com
Blacksburg, VA
Richmond, VA
Hampton Roads, VA

TOPOGRAPHIC SURVEY - NORTHEAST

RAMBLEWOOD PARK IMPROVEMENTS

RAMBLEWOOD PARK, HARRISONBURG, VIRGINIA

REVISIONS

DESIGNED BY:	
DRAWN BY:	CAS
CHECKED BY:	NAO
SCALE:	1" = 50'
DATE:	MAY 10, 2013
PROJECT NUMBER:	06154-192CV

C1.2

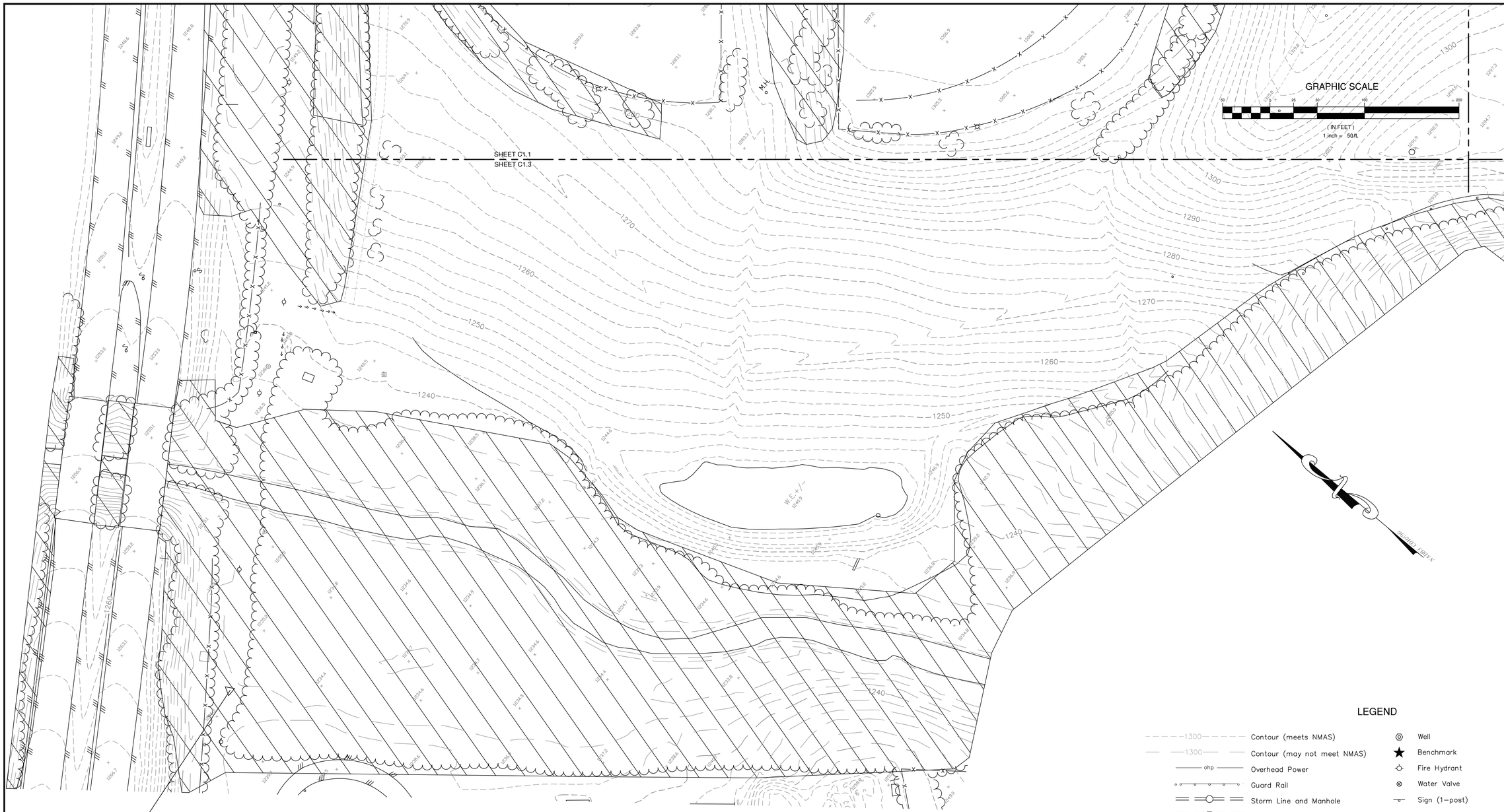

NOTES:

1.) Source of Meridian: NAD83/CORS96 based upon GPS established by Draper Aden Associates.
2.) Vertical datum: NAVD88 based upon GPS established by Draper Aden Associates.
3.) This survey was prepared without the benefit of a title commitment or title report and all easements and encumbrances that might be disclosed in a title search may not be shown.
4.) Utilities shown are based upon:
____SUE Quality Level D, ASCE 38–02 – compiled records only
____SUE Quality Level C, ASCE 38–02 – visible evidence in conjunction with compiled records.
__X__SUE Quality Level B, ASCE 38–02 – field designation of a portion of the underground utilities performed by the City of Harrisonburg and visible evidence in conjunction with compiled records. Additional underground utilities exist, but were not marked for this project.
____SUE Quality Level A, ASCE 38–02 – test pits at locations shown hereon performed by (DAA; Other) in conjunction with field designation of underground utilities performed by (DAA; Miss Utility, Ticket # _____ ; Other), visible evidence and compiled records.
____No SUE was performed or requested for this survey. Utilities shown hereon are based on field observation only.
5.) This compiled topographic survey is based on aerial photogrammetry performed by Louisa Aerial Surveys on December 11, 2011 at an original scale of 1"=50' and a contour interval of 2 feet. The aerial survey was augmented with items field located by Draper Aden Associates, including utilities, storm lines, monitoring wells, and gas vents.
6.) Contour interval: 2'.
7.) This survey was prepared for the City of Harrisonburg. Draper Aden Associates assumes no liability for reuse or modification of this document.
8.) Property lines are not shown or requested for this survey.
9.) Draper Aden Associates provides benchmarks for the construction of the improvements shown on these plans. All other existing elevations are for reference to existing conditions only. Do not use spot elevations, finish floor elevations, elevations on manholes, elevations on survey nails, survey hubs, control points (horizontal points provided) or any other points for construction other than the provided benchmarks. Failure to utilize and verify the provided benchmarks could result in damages and additional cost that are the contractor's responsibility.
10.) Hatched areas indicate dense vegetation.

NOTE: THE SURVEY NO LONGER REFLECTS THE CONDITIONS IN THE FIELD. SOME ITEMS HAVE ALREADY BEEN REMOVED/ DEMOLISHED AND FILL HAS BEEN PLACED AT THE SITE. FILL WILL BE APPROXIMATELY TO THE ELEVATIONS SHOWN ON SHEET C5.0 WHEN THE CONTRACTOR TAKES OVER THE SITE. IT WILL BE THE CONTRACTORS RESPONSIBILITY TO VERIFY ELEVATIONS IN THE FIELD AND MAKE ANY CHANGES REQUIRED TO MATCH GRADES SHOWN ON SHEET C4.0.

LEGEND

- 1300 — Contour (meets NMAS)
- 1300 — Contour (may not meet NMAS)
- ohp — Overhead Power
- Guard Rail
- Storm Line and Manhole
- Storm Line and Inlet
- uge — Underground Electric
- ugt — Underground Telephone
- w — Waterline
- Asphalt
- Building
- X — Fence (as noted)
- Stream
- Treeline
- Guy Wire
- Concrete
- Gravel
- Well
- Benchmark
- Fire Hydrant
- Water Valve
- Sign (1–post)
- Sign (2–post)
- ×1561.3 — Spot Elevation
- Electric Box
- Utility Pole
- P — Power Transformer
- Light Pole
- Wood Post
- Metal Post
- Monitoring Well
- Gas Vent
- Gas Probe
- Sanitary Manhole
- Guy Pole

COMMONWEALTH OF VIRGINIA
CHERYL A. STOCKTON
Lic. No. 2425
5/10/13
LAND SURVEYOR

Draper Aden Associates
Engineering • Surveying • Environmental Services
Blacksburg, VA
Richmond, VA
Hampton Roads, VA
Charlottesville, VA
700 Harris Street, Suite E
Charlottesville, VA 22903
434-295-0700 Fax: 434-295-2105
www.daa.com

TOPOGRAPHIC SURVEY - SOUTH
RAMBLEWOOD PARK IMPROVEMENTS
RAMBLEWOOD PARK, HARRISONBURG, VIRGINIA

REVISIONS

DESIGNED BY:	
DRAWN BY:	CAS
CHECKED BY:	NAO
SCALE:	1" = 50'
DATE:	MAY 10, 2013
PROJECT NUMBER:	06154-192CV

C1.3

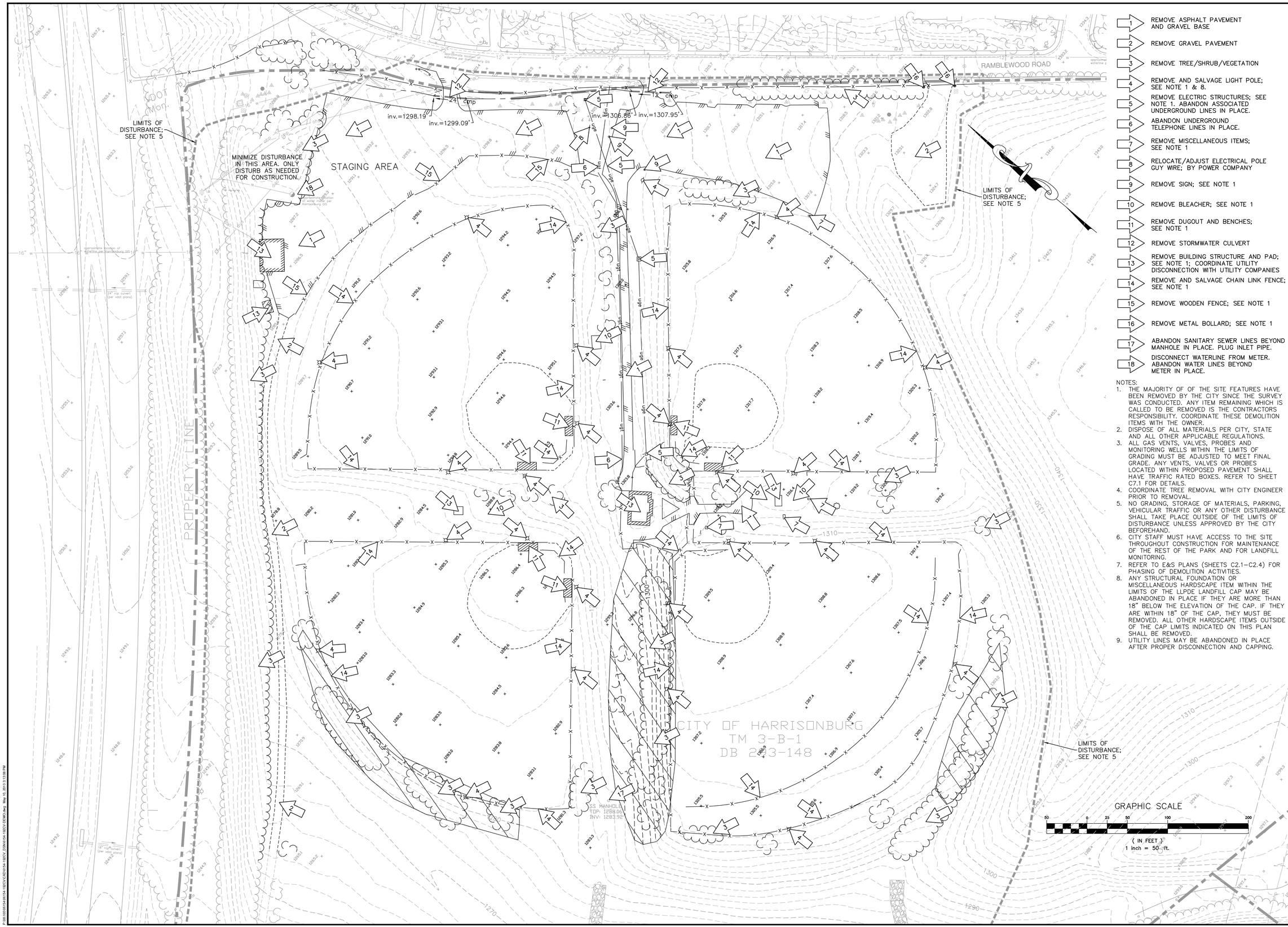

1. REMOVE ASPHALT PAVEMENT AND GRAVEL BASE
2. REMOVE GRAVEL PAVEMENT
3. REMOVE TREE/SHRUB/VEGETATION
4. REMOVE AND SALVAGE LIGHT POLE; SEE NOTE 1 & 8.
5. REMOVE ELECTRIC STRUCTURES; SEE NOTE 1. ABANDON ASSOCIATED UNDERGROUND LINES IN PLACE.
6. ABANDON UNDERGROUND TELEPHONE LINES IN PLACE.
7. REMOVE MISCELLANEOUS ITEMS; SEE NOTE 1
8. RELOCATE/ADJUST ELECTRICAL POLE GUY WIRE; BY POWER COMPANY
9. REMOVE SIGN; SEE NOTE 1
10. REMOVE BLEACHER; SEE NOTE 1
11. REMOVE DUGOUT AND BENCHES; SEE NOTE 1
12. REMOVE STORMWATER CULVERT
13. REMOVE BUILDING STRUCTURE AND PAD; SEE NOTE 1; COORDINATE UTILITY DISCONNECTION WITH UTILITY COMPANIES
14. REMOVE AND SALVAGE CHAIN LINK FENCE; SEE NOTE 1
15. REMOVE WOODEN FENCE; SEE NOTE 1
16. REMOVE METAL BOLLARD; SEE NOTE 1
17. ABANDON SANITARY SEWER LINES BEYOND MANHOLE IN PLACE. PLUG INLET PIPE.
18. DISCONNECT WATERLINE FROM METER. ABANDON WATER LINES BEYOND METER IN PLACE.

NOTES:

1. THE MAJORITY OF OF THE SITE FEATURES HAVE BEEN REMOVED BY THE CITY SINCE THE SURVEY WAS CONDUCTED. ANY ITEM REMAINING WHICH IS CALLED TO BE REMOVED IS THE CONTRACTORS RESPONSIBILITY. COORDINATE THESE DEMOLITION ITEMS WITH THE OWNER.
2. DISPOSE OF ALL MATERIALS PER CITY, STATE AND ALL OTHER APPLICABLE REGULATIONS.
3. ALL GAS VENTS, VALVES, PROBES AND MONITORING WELLS WITHIN THE LIMITS OF GRADING MUST BE ADJUSTED TO MEET FINAL GRADE. ANY VENTS, VALVES OR PROBES LOCATED WITHIN PROPOSED PAVEMENT SHALL HAVE TRAFFIC RATED BOXES. REFER TO SHEET C7.1 FOR DETAILS.
4. COORDINATE TREE REMOVAL WITH CITY ENGINEER PRIOR TO REMOVAL.
5. NO GRADING, STORAGE OF MATERIALS, PARKING, VEHICULAR TRAFFIC OR ANY OTHER DISTURBANCE SHALL TAKE PLACE OUTSIDE OF THE LIMITS OF DISTURBANCE UNLESS APPROVED BY THE CITY BEFOREHAND.
6. CITY STAFF MUST HAVE ACCESS TO THE SITE THROUGHOUT CONSTRUCTION FOR MAINTENANCE OF THE REST OF THE PARK AND FOR LANDFILL MONITORING.
7. REFER TO E&S PLANS (SHEETS C2.1–C2.4) FOR PHASING OF DEMOLITION ACTIVITIES.
8. ANY STRUCTURAL FOUNDATION OR MISCELLANEOUS HARDSCAPE ITEM WITHIN THE LIMITS OF THE LLPDE LANDFILL CAP MAY BE ABANDONED IN PLACE IF THEY ARE MORE THAN 18" BELOW THE ELEVATION OF THE CAP. IF THEY ARE WITHIN 18" OF THE CAP, THEY MUST BE REMOVED. ALL OTHER HARDSCAPE ITEMS OUTSIDE OF THE CAP LIMITS INDICATED ON THIS PLAN SHALL BE REMOVED.
9. UTILITY LINES MAY BE ABANDONED IN PLACE AFTER PROPER DISCONNECTION AND CAPPING.

COMMONWEALTH OF VIRGINIA
JULIA WALLACE SKARE
Lic. No. 43893
5/10/13
PROFESSIONAL ENGINEER

Draper Aden Associates
Engineering • Surveying • Environmental Services
Blacksburg, VA
Richmond, VA
Hampton Roads, VA
Charlottesville, VA
705 Peregrine Way, Suite 100
Charlottesville, VA 22903
434-295-0700 Fax: 434-295-2105
www.daa.com

DEMOLITION PLAN

RAMBLEWOOD PARK IMPROVEMENTS

RAMBLEWOOD PARK, HARRISONBURG, VIRGINIA

REVISIONS

DESIGNED BY:	JWS
DRAWN BY:	ECB
CHECKED BY:	GWC
SCALE:	1" = 50'
DATE:	MAY 10, 2013
PROJECT NUMBER:	06154-192CV

C2.0

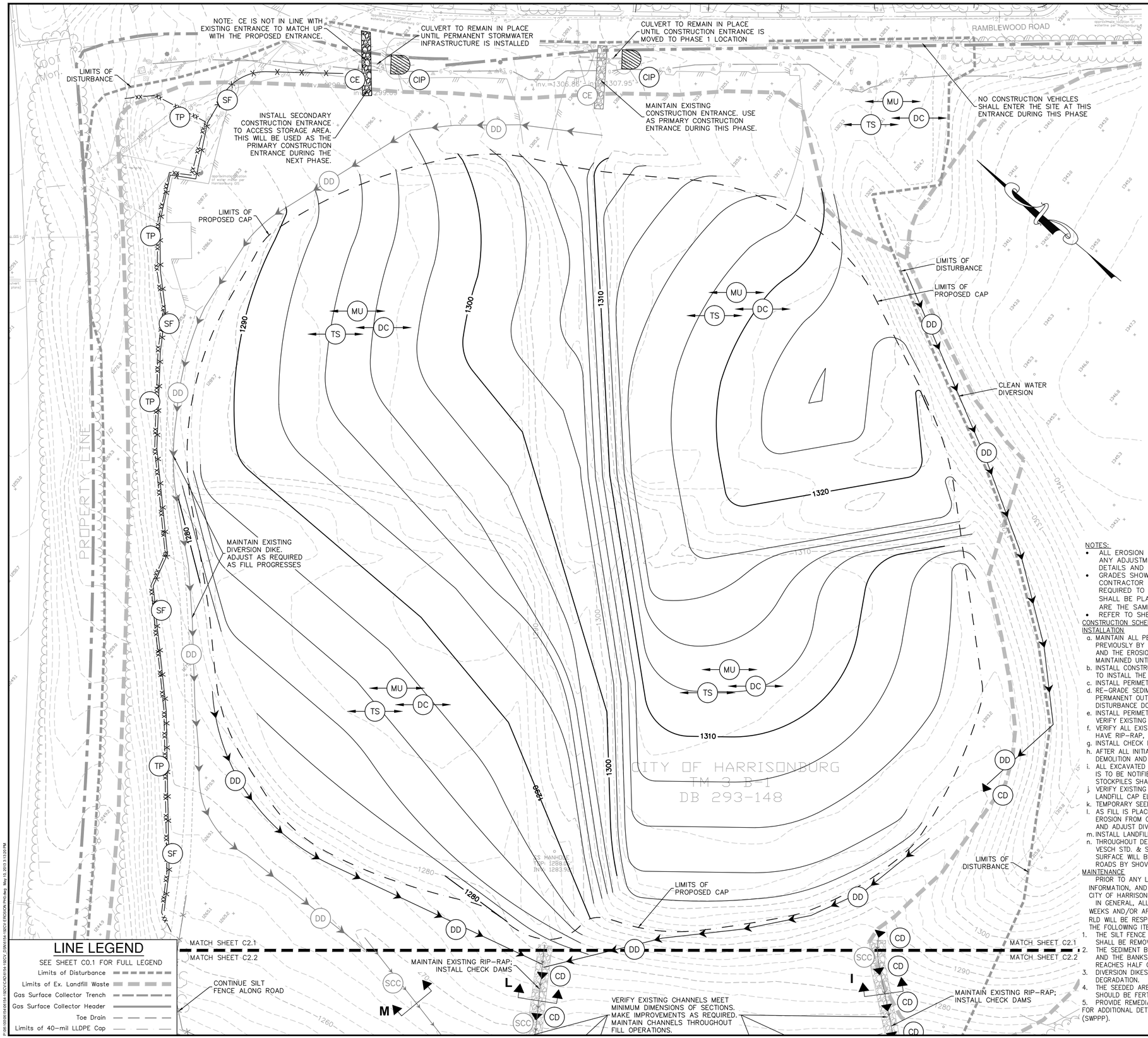

LINE LEGEND

SEE SHEET C0.1 FOR FULL LEGEND

- Limits of Disturbance
- Limits of Ex. Landfill Waste
- Gas Surface Collector Trench
- Gas Surface Collector Header
- Toe Drain
- Limits of 40-mil LLDPE Cap

EROSION & SEDIMENT CONTROL LEGEND

No.	TITLE	KEY	SYMBOL
3.02	TEMPORARY STONE CONSTRUCTION ENTRANCE	CE	
3.05	SILT FENCE	SF	
3.07	STORM DRAIN INLET PROTECTION	IP	
3.08	CULVERT INLET PROTECTION	CIP	
3.09	TEMPORARY DIVERSION DIKE	DD	
3.14	TEMPORARY SEDIMENT BASIN	SB	SB
3.17	STORMWATER CONVEYANCE CHANNEL	SCC	
3.18	OUTLET PROTECTION	OP	
3.19	RIPRAP	RR	
3.20	ROCK CHECK DAM	CD	
3.29	SURFACE ROUGHENING	SR	SR
3.30	TOPSOILING	TO	TO
3.31	TEMPORARY SEEDING	TS	TS
3.32	PERMANENT SEEDING	PS	PS
3.35	MULCHING	MU	MU
3.36	SOIL STABILIZATION BLANKETS & MATTING	B/M	B/M
3.38	TREE PRESERVATION AND PROTECTION	TP	TP
3.39	DUST CONTROL	DC	DC

NOTES:

- ALL EROSION AND SEDIMENT CONTROLS SHOWN AS EXISTING SHALL BE FIELD VERIFIED. MAKE ANY ADJUSTMENT AND REPAIRS REQUIRED TO ENSURE THE MEASURES MATCH THE PLAN, DETAILS AND REQUIREMENTS OF THE VIRGINIA EROSION AND SEDIMENT CONTROL HANDBOOK.
- GRADES SHOWN ON THIS SHEET ARE THE APPROXIMATE CONDITIONS IN THE FIELD. THE CONTRACTOR SHALL VERIFY THE GRADES IN THE FIELD AND MAKE ANY ADJUSTMENTS REQUIRED TO OBTAIN THE PROPOSED GRADE SHOWN ON THIS SHEET. THE LANDFILL CAP SHALL BE PLACED AT THE GRADES SHOWN ON THIS PLAN. (GRADES SHOWN ON C2.1 & C5.0 ARE THE SAME.)
- REFER TO SHEETS C7.2 & C7.3 FOR ALL EROSION AND SEDIMENT CONTROL DETAILS.

CONSTRUCTION SCHEDULE -- INITIAL EROSION AND SEDIMENT CONTROL MEASURES AND LANDFILL CAP INSTALLATION

a. MAINTAIN ALL PERIMETER EROSION AND SEDIMENT CONTROL MEASURES WHICH WERE INSTALLED IN PREVIOUSLY BY OTHERS. INSPECT ALL MEASURE TO ENSURE THEY MEET THE REQUIREMENTS OF THE PLAN AND THE EROSION AND SEDIMENT CONTROL HANDBOOK. EROSION AND SEDIMENTATION CONTROLS SHALL BE MAINTAINED UNTIL UPSTREAM VEGETATIVE COVER IS ESTABLISHED.
b. INSTALL CONSTRUCTION ENTRANCES WHICH HAVE NOT BEEN INSTALLED. DISTURB THE MINIMUM AREA NEEDED TO INSTALL THE ENTRANCE.
c. INSTALL PERIMETER SILT FENCE AND TREE PROTECTION AS SHOWN.
d. RE-GRADE SEDIMENT BASIN AS SHOWN. REMOVE EXISTING OUTLET STRUCTURE AND PIPE AND INSTALL NEW PERMANENT OUTLET STRUCTURE AND PIPING. RECONFIGURE OUTLET PROTECTION AS NEEDED BUT MINIMIZE DISTURBANCE DOWNSTREAM OF BASIN BERM. IMMEDIATELY SEED AND MULCH ALL DISTURBED AREAS.
e. INSTALL PERIMETER DIVERSION DIKES AND CULVERT INLET PROTECTION WHICH HAVE NOT BEEN INSTALLED. VERIFY EXISTING DIVERSION DIKES ARE AT LEAST 18" HIGH.
f. VERIFY ALL EXISTING CHANNELS MEET THE MINIMUM DIMENSIONS OF THE DETAILED SECTIONS. IF CHANNELS HAVE RIP-RAP, VERIFY THE RIP-RAP IS ADEQUATE.
g. INSTALL CHECK DAMS IN ALL ON-SITE CHANNELS.
h. AFTER ALL INITIAL EROSION CONTROL FEATURES HAVE BEEN VERIFIED AND/OR INSTALLED, CONTINUE DEMOLITION AND CLEARING OF THE SITE.
i. ALL EXCAVATED MATERIAL AND DEBRIS SHALL BE STOCKPILED OR DISPOSED OF IN A LAWFUL MANNER. DCR IS TO BE NOTIFIED PRIOR TO ANY HAULING TO OR FROM ANY OFFSITE BORROW OR WASTE AREA. STOCKPILES SHALL BE SURROUNDED BY SILT FENCE AND SEEDED AS REQUIRED.
j. VERIFY EXISTING GRADES ON THE SITE. MAKE ANY CHANGES REQUIRED TO BRING THE ELEVATIONS TO THE LANDFILL CAP ELEVATION.
k. TEMPORARY SEED AND MULCH AS GRADING PROGRESSES, IF NECESSARY.
l. AS FILL IS PLACED, INSTALL DIVERSION MEASURES ACROSS THE FILL AREAS AS NEEDED TO PREVENT RILL EROSION FROM OCCURRING. ENSURE ALL RUNOFF IS ULTIMATELY DIVERTED TO THE SEDIMENT BASIN. MOVE AND ADJUST DIVERSION MEASURES AS FILL CONTINUES.
m. INSTALL LANDFILL CAP WHEN DESIRED GRADE IS ACHIEVED.
n. THROUGHOUT DEMOLITION & CONSTRUCTION ACTIVITIES, APPLY DUST CONTROL MEASURES ACCORDING TO VESCH STD. & SPEC. 3.39. ANY AND ALL MATERIAL OR DEBRIS TRACKED ONTO A PUBLIC OR PRIVATE ROAD SURFACE WILL BE CLEANED THOROUGHLY AT THE END OF EACH DAY. SEDIMENT SHALL BE REMOVED FROM ROADS BY SHOVELING OR SWEEPING AND BE TRANSPORTED TO A SEDIMENT CONTROLLED DISPOSAL AREA.

MAINTENANCE

PRIOR TO ANY LAND DISTURBING ACTIVITY, CONTRACTOR SHALL PROVIDE THE NAME, CERTIFICATION INFORMATION, AND CONTACT INFORMATION OF THE DESIGNATED RESPONSIBLE LAND DISTURBER (RLD) TO THE CITY OF HARRISONBURG.

IN GENERAL, ALL EROSION AND SEDIMENT CONTROL MEASURES WILL BE CHECKED AT LEAST EVERY TWO WEEKS AND/OR AFTER EACH SIGNIFICANT RAINFALL. DURING CONSTRUCTION, THE CONTRACTOR'S DESIGNATED RLD WILL BE RESPONSIBLE FOR INSPECTING AND REPAIRING DAMAGED EROSION/SEDIMENT CONTROL MEASURES. THE FOLLOWING ITEMS WILL BE CHECKED IN PARTICULAR:

1. THE SILT FENCE BARRIER WILL BE CHECKED FOR UNDERMINING OR DETERIORATION OF THE FABRIC. SEDIMENT SHALL BE REMOVED WHEN THE LEVEL OF SEDIMENT DEPOSITION REACHES HALF WAY TO TOP OF BARRIER.
2. THE SEDIMENT BASIN SHALL BE CHECK REGULARLY TO ENSURE OUTFALL STRUCTURE IS WORKING PROPERLY AND THE BANKS HAVE A HEALTHY STAND OF VEGETATION. THE BASIN SHALL BE MUCKED WHEN SEDIMENT REACHES HALF OF THE WET STORAGE VOLUME.
3. DIVERSION DIKES AND CHANNELS SHALL BE INSPECTED TO ENSURE THEY SHOW NO SIGNS OF EROSION OR DEGRADATION.
4. THE SEEDED AREAS WILL BE CHECKED REGULARLY TO ENSURE THAT A GOOD STAND IS MAINTAINED. AREAS SHOULD BE FERTILIZED AND RESEEDED AS NEEDED. REFER TO ESC TECHNICAL BULLETIN #4.
5. PROVIDE REMEDIAL STABILIZATION AND SEEDING FOR A PERIOD OF ONE YEAR AFTER CONSTRUCTION.

FOR ADDITIONAL DETAIL, REFER TO THE ON-SITE COPY OF THE STORMWATER POLLUTION PREVENT PLAN (SWPPP).

COMMONWEALTH OF VIRGINIA
JULIA WALLACE SKARE
Lic. No. 43893
5/10/13
PROFESSIONAL ENGINEER

Draper Aden Associates
Engineering • Surveying • Environmental Services
Blacksburg, VA
Richmond, VA
Hampton Roads, VA
Charlottesville, VA
705 Harris Street, Suite 1E
Charlottesville, VA 22903
434-295-0700 Fax: 434-295-2105
www.daa.com

EROSION AND SEDIMENT CONTROL - INITIAL NORTH

RAMBLEWOOD PARK IMPROVEMENTS

RAMBLEWOOD PARK, HARRISONBURG, VIRGINIA

REVISIONS

DESIGNED BY:	JWS
DRAWN BY:	ECB
CHECKED BY:	GWC
SCALE:	1" = 50'
DATE:	MAY 10, 2013
PROJECT NUMBER:	06154-192CV

C2.1

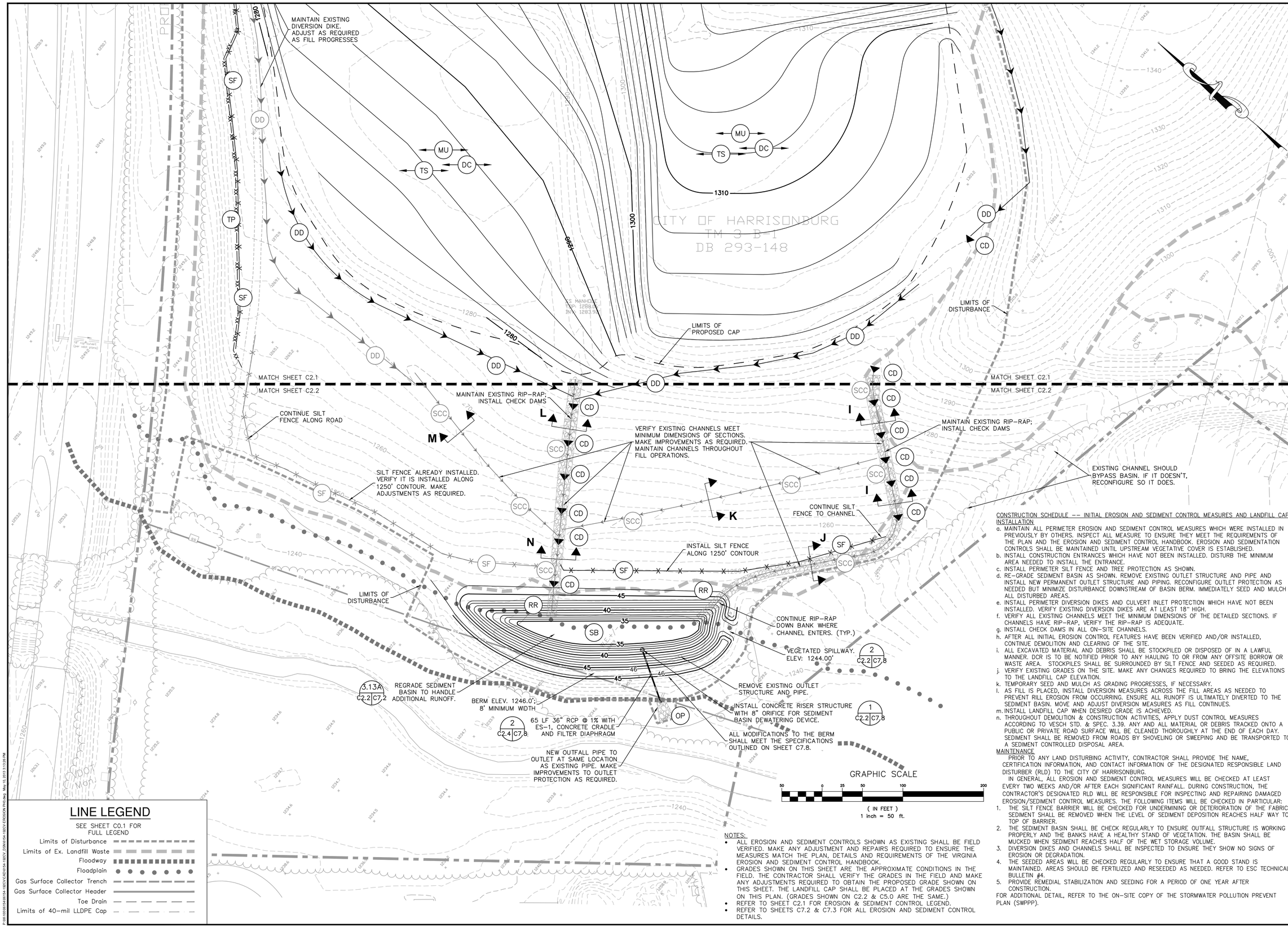

LINE LEGEND

SEE SHEET C0.1 FOR FULL LEGEND

- Limits of Disturbance
- Limits of Ex. Landfill Waste
- Floodway
- Floodplain
- Gas Surface Collector Trench
- Gas Surface Collector Header
- Toe Drain
- Limits of 40-mil LLDPE Cap

NOTES:

- ALL EROSION AND SEDIMENT CONTROLS SHOWN AS EXISTING SHALL BE FIELD VERIFIED. MAKE ANY ADJUSTMENT AND REPAIRS REQUIRED TO ENSURE THE MEASURES MATCH THE PLAN, DETAILS AND REQUIREMENTS OF THE VIRGINIA EROSION AND SEDIMENT CONTROL HANDBOOK.
- GRADES SHOWN ON THIS SHEET ARE THE APPROXIMATE CONDITIONS IN THE FIELD. THE CONTRACTOR SHALL VERIFY THE GRADES IN THE FIELD AND MAKE ANY ADJUSTMENTS REQUIRED TO OBTAIN THE PROPOSED GRADE SHOWN ON THIS SHEET. THE LANDFILL CAP SHALL BE PLACED AT THE GRADES SHOWN ON THIS PLAN. (GRADES SHOWN ON C2.2 & C5.0 ARE THE SAME.)
- REFER TO SHEET C2.1 FOR EROSION & SEDIMENT CONTROL LEGEND.
- REFER TO SHEETS C7.2 & C7.3 FOR ALL EROSION AND SEDIMENT CONTROL DETAILS.

CONSTRUCTION SCHEDULE -- INITIAL EROSION AND SEDIMENT CONTROL MEASURES AND LANDFILL CAP INSTALLATION

a. MAINTAIN ALL PERIMETER EROSION AND SEDIMENT CONTROL MEASURES WHICH WERE INSTALLED IN PREVIOUSLY BY OTHERS. INSPECT ALL MEASURE TO ENSURE THEY MEET THE REQUIREMENTS OF THE PLAN AND THE EROSION AND SEDIMENT CONTROL HANDBOOK. EROSION AND SEDIMENTATION CONTROLS SHALL BE MAINTAINED UNTIL UPSTREAM VEGETATIVE COVER IS ESTABLISHED.
b. INSTALL CONSTRUCTION ENTRANCES WHICH HAVE NOT BEEN INSTALLED. DISTURB THE MINIMUM AREA NEEDED TO INSTALL THE ENTRANCE.
c. INSTALL PERIMETER SILT FENCE AND TREE PROTECTION AS SHOWN.
d. RE-GRADE SEDIMENT BASIN AS SHOWN. REMOVE EXISTING OUTLET STRUCTURE AND PIPE AND INSTALL NEW PERMANENT OUTLET STRUCTURE AND PIPING. RECONFIGURE OUTLET PROTECTION AS NEEDED BUT MINIMIZE DISTURBANCE DOWNSTREAM OF BASIN BERM. IMMEDIATELY SEED AND MULCH ALL DISTURBED AREAS.
e. INSTALL PERIMETER DIVERSION DIKES AND CULVERT INLET PROTECTION WHICH HAVE NOT BEEN INSTALLED. VERIFY EXISTING DIVERSION DIKES ARE AT LEAST 18" HIGH.
f. VERIFY ALL EXISTING CHANNELS MEET THE MINIMUM DIMENSIONS OF THE DETAILED SECTIONS. IF CHANNELS HAVE RIP-RAP, VERIFY THE RIP-RAP IS ADEQUATE.
g. INSTALL CHECK DAMS IN ALL ON-SITE CHANNELS.
h. AFTER ALL INITIAL EROSION CONTROL FEATURES HAVE BEEN VERIFIED AND/OR INSTALLED, CONTINUE DEMOLITION AND CLEARING OF THE SITE.
i. ALL EXCAVATED MATERIAL AND DEBRIS SHALL BE STOCKPILED OR DISPOSED OF IN A LAWFUL MANNER. DCR IS TO BE NOTIFIED PRIOR TO ANY HAULING TO OR FROM ANY OFFSITE BORROW OR WASTE AREA. STOCKPILES SHALL BE SURROUNDED BY SILT FENCE AND SEEDED AS REQUIRED.
j. VERIFY EXISTING GRADES ON THE SITE. MAKE ANY CHANGES REQUIRED TO BRING THE ELEVATIONS TO THE LANDFILL CAP ELEVATION.
k. TEMPORARY SEED AND MULCH AS GRADING PROGRESSES, IF NECESSARY.
l. AS FILL IS PLACED, INSTALL DIVERSION MEASURES ACROSS THE FILL AREAS AS NEEDED TO PREVENT RILL EROSION FROM OCCURRING. ENSURE ALL RUNOFF IS ULTIMATELY DIVERTED TO THE SEDIMENT BASIN. MOVE AND ADJUST DIVERSION MEASURES AS FILL CONTINUES.
m. INSTALL LANDFILL CAP WHEN DESIRED GRADE IS ACHIEVED.
n. THROUGHOUT DEMOLITION & CONSTRUCTION ACTIVITIES, APPLY DUST CONTROL MEASURES ACCORDING TO VESCH STD. & SPEC. 3.39. ANY AND ALL MATERIAL OR DEBRIS TRACKED ONTO A PUBLIC OR PRIVATE ROAD SURFACE WILL BE CLEANED THOROUGHLY AT THE END OF EACH DAY. SEDIMENT SHALL BE REMOVED FROM ROADS BY SHOVELING OR SWEEPING AND BE TRANSPORTED TO A SEDIMENT CONTROLLED DISPOSAL AREA.

MAINTENANCE

PRIOR TO ANY LAND DISTURBING ACTIVITY, CONTRACTOR SHALL PROVIDE THE NAME, CERTIFICATION INFORMATION, AND CONTACT INFORMATION OF THE DESIGNATED RESPONSIBLE LAND DISTURBER (RLD) TO THE CITY OF HARRISONBURG.

IN GENERAL, ALL EROSION AND SEDIMENT CONTROL MEASURES WILL BE CHECKED AT LEAST EVERY TWO WEEKS AND/OR AFTER EACH SIGNIFICANT RAINFALL. DURING CONSTRUCTION, THE CONTRACTOR'S DESIGNATED RLD WILL BE RESPONSIBLE FOR INSPECTING AND REPAIRING DAMAGED EROSION/SEDIMENT CONTROL MEASURES. THE FOLLOWING ITEMS WILL BE CHECKED IN PARTICULAR:

1. THE SILT FENCE BARRIER WILL BE CHECKED FOR UNDERMINING OR DETERIORATION OF THE FABRIC. SEDIMENT SHALL BE REMOVED WHEN THE LEVEL OF SEDIMENT DEPOSITION REACHES HALF WAY TO TOP OF BARRIER.
2. THE SEDIMENT BASIN SHALL BE CHECK REGULARLY TO ENSURE OUTFALL STRUCTURE IS WORKING PROPERLY AND THE BANKS HAVE A HEALTHY STAND OF VEGETATION. THE BASIN SHALL BE MUCKED WHEN SEDIMENT REACHES HALF OF THE WET STORAGE VOLUME.
3. DIVERSION DIKES AND CHANNELS SHALL BE INSPECTED TO ENSURE THEY SHOW NO SIGNS OF EROSION OR DEGRADATION.
4. THE SEEDED AREAS WILL BE CHECKED REGULARLY TO ENSURE THAT A GOOD STAND IS MAINTAINED. AREAS SHOULD BE FERTILIZED AND RESEEDED AS NEEDED. REFER TO ESC TECHNICAL BULLETIN #4.
5. PROVIDE REMEDIAL STABILIZATION AND SEEDING FOR A PERIOD OF ONE YEAR AFTER CONSTRUCTION.

FOR ADDITIONAL DETAIL, REFER TO THE ON-SITE COPY OF THE STORMWATER POLLUTION PREVENT PLAN (SWPPP).

COMMONWEALTH OF VIRGINIA
JULIA WALLACE SKARE
Lic. No. 43893
5/10/13
PROFESSIONAL ENGINEER

Draper Aden Associates
Engineering • Surveying • Environmental Services
Blacksburg, VA
Richmond, VA
Hampton Roads, VA
Charlottesville, VA
108 Mechum Ridge Lane
Charlottesville, VA 22903
434-295-0700 Fax: 434-295-2105
www.daa.com

EROSION AND SEDIMENT CONTROL - INITIAL SOUTH

RAMBLEWOOD PARK IMPROVEMENTS

RAMBLEWOOD PARK, HARRISONBURG, VIRGINIA

REVISIONS

DESIGNED BY:	JWS
DRAWN BY:	ECB
CHECKED BY:	GWC
SCALE:	1" = 50'
DATE:	MAY 10, 2013
PROJECT NUMBER:	06154-192CV

C2.2

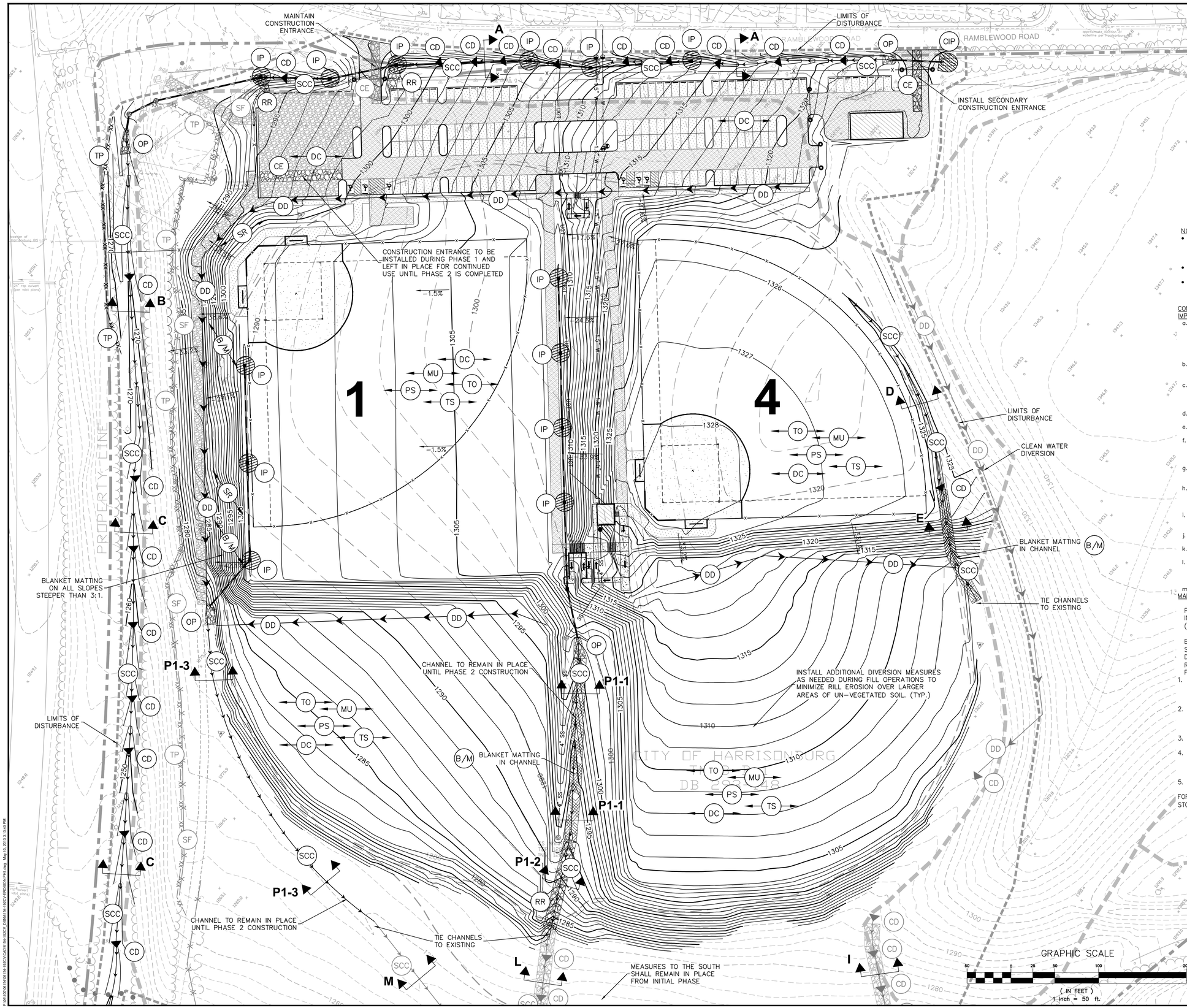

NOTES:

- GRAY SCALED E&S MEASURES WERE INSTALLED IN A PREVIOUS PHASE AND SHALL REMAIN IN PLACE DURING THIS PHASE. MAKE ANY NECESSARY ADJUSTMENTS OR IMPROVEMENTS TO ENSURE MEASURES MEET REQUIREMENTS.
- REFER TO SHEET C2.1 FOR EROSION & SEDIMENT CONTROL LEGEND.
- REFER TO SHEETS C7.2 & C7.3 FOR ALL EROSION AND SEDIMENT CONTROL DETAILS. CHANNEL SECTION DIMENSIONS SHOWN ON C7.3

CONSTRUCTION SCHEDULE -- PHASE 1 – FINAL GRADING AND SITE IMPROVEMENTS -- FIELDS 1&4

a. MAINTAIN ALL PERIMETER EROSION AND SEDIMENT CONTROL MEASURES FROM PREVIOUS PHASES AS SHOWN ON THE PLANS. AS FILL AND CONSTRUCTION PROGRESSES, SOME MEASURE WILL NEED TO BE MOVED AND ADJUSTED. EROSION AND SEDIMENTATION CONTROLS SHALL BE MAINTAINED UNTIL UPSTREAM VEGETATIVE COVER IS ESTABLISHED.
b. BEGIN TO PLACE FILL OVER LANDFILL CAP. (THE CAP SHALL HAVE A MINIMUM TWO FEET OF COVER IN ALL LOCATIONS AT THE END OF PHASE 1.)
c. INSTALL SIMILAR DIVERSION MEASURES ACROSS FILL AREAS AS NEEDED TO PREVENT RILL EROSION FROM OCCURRING. CONTINUE TO ENSURE ALL RUNOFF FROM THE DISTURBED AREA (EXCLUDING PARKING LOT) IS DIVERTED TO THE SEDIMENT BASIN.
d. MAINTAIN RIP RAP CHANNELS DOWN SOUTH SLOPES TO BASIN. ADJUST AS FILL PROGRESSES.
e. USE SURFACE ROUGHING THROUGHOUT FILL ACTIVITIES TO HELP PREVENT RILL EROSION ALONG LONG, DISTURBED SLOPES.
f. CONSTRUCT STORMWATER CONVEYANCE CHANNELS. IMMEDIATELY SEED (OR INSTALL RIP-RAP OR MATTING IN) CONVEYANCE CHANNELS AND INSTALL CHECK DAMS AS ARE THEY ARE BROUGHT TO FINAL GRADE.
g. INSTALL CHANNELS FROM STORM SEWER OUTLETS TO CONNECT TO EXISTING CHANNELS. THESE CHANNELS WILL REMAIN OPERATIONAL UNTIL STORM SEWER IS COMPLETED IN PHASE 2.
h. BEGIN STORM SEWER INSTALLATION. INSTALL STORM DRAIN INLET PROTECTION AS INLETS ARE INSTALLED, CULVERT INLET PROTECTION AS CULVERTS ARE INSTALLED AND OUTLET PROTECTION PRIOR TO STORM PIPES RECEIVING RUNOFF.
i. INSTALL ADDITIONAL EROSION AND SEDIMENT CONTROL MEASURES AS SHOWN ON THE PLANS AND AS DEEMED NECESSARY BY THE RLD, ENGINEER OR THE CITY.
j. PROCEED WITH INSTALLATION OF ADDITIONAL UTILITIES AND HARDSCAPES INCLUDING PARKING LOT AND WALKS.
k. INSTALL CONSTRUCTION ENTRANCE TO BE USED THROUGH PHASE 2 CONSTRUCTION AT WEST END OF PARKING LOT.
l. APPLY TOPSOIL, PERMANENT SEEDING AND STRAW MULCHING TO ALL AREAS WITHIN THE LIMITS OF DISTURBANCE OUTSIDE OF THE HARDSCAPE AND MULCHED LANDSCAPED AREAS. APPLY BLANKET MATTING TO ALL SLOPES GREATER THAN 3:1.
m. MUCK SEDIMENT BASIN TO ORIGINAL ELEVATIONS.

MAINTENANCE

PRIOR TO ANY LAND DISTURBING ACTIVITY, CONTRACTOR SHALL PROVIDE THE NAME, CERTIFICATION INFORMATION, AND CONTACT INFORMATION OF THE DESIGNATED RESPONSIBLE LAND DISTURBER (RLD) TO THE CITY OF HARRISONBURG.

IN GENERAL, ALL EROSION AND SEDIMENT CONTROL MEASURES WILL BE CHECKED AT LEAST EVERY TWO WEEKS AND/OR AFTER EACH SIGNIFICANT RAINFALL. DURING CONSTRUCTION, THE CONTRACTOR'S DESIGNATED RLD WILL BE RESPONSIBLE FOR INSPECTING AND REPAIRING DAMAGED EROSION/SEDIMENT CONTROL MEASURES. THE FOLLOWING ITEMS WILL BE CHECKED IN PARTICULAR:

1. THE SILT FENCE BARRIER WILL BE CHECKED FOR UNDERMINING OR DETERIORATION OF THE FABRIC. SEDIMENT SHALL BE REMOVED WHEN THE LEVEL OF SEDIMENT DEPOSITION REACHES HALF WAY TO TOP OF BARRIER.
2. THE SEDIMENT BASIN SHALL BE CHECK REGULARLY TO ENSURE OUTFALL STRUCTURE IS WORKING PROPERLY AND THE BANKS HAVE A HEALTHY STAND OF VEGETATION. THE BASIN SHALL BE MUCKED WHEN SEDIMENT REACHES HALF OF THE WET STORAGE VOLUME.
3. DIVERSION DIKES AND CHANNELS SHALL BE INSPECTED TO ENSURE THEY SHOW NO SIGNS OF EROSION OR DEGRADATION.
4. THE SEEDED AREAS WILL BE CHECKED REGULARLY TO ENSURE THAT A GOOD STAND IS MAINTAINED. AREAS SHOULD BE FERTILIZED AND RESEEDED AS NEEDED. REFER TO ESC TECHNICAL BULLETIN #4.
5. PROVIDE REMEDIAL STABILIZATION AND SEEDING FOR A PERIOD OF ONE YEAR AFTER CONSTRUCTION.

FOR ADDITIONAL DETAIL, REFER TO THE ON-SITE COPY OF THE STORMWATER POLLUTION PREVENT PLAN (SWPPP).

LINE LEGEND

SEE SHEET C0.1 FOR FULL LEGEND

Proposed Final 5' Contour	1310
Proposed Final 1' Contour	1304
Future 10' Contour	1330
Future 2' Contour	
Landfill Cap 10' Contour	1290
Landfill Cap 2' Contour	
Existing 10' Contour	1290
Existing 2' Contour	
Limits of Disturbance	
Limits of Ex. Landfill Waste	
Gas Surface Collector Trench	
Gas Surface Collector Header	
Toe Drain	
Limits of 40-mil LLDPE Cap	

COMMONWEALTH OF VIRGINIA
Julia W. Skare
JULIA WALLACE SKARE
Lic. No. 43893
5/10/13
PROFESSIONAL ENGINEER

Draper Aden Associates
Engineering • Surveying • Environmental Services
Blacksburg, VA
Richmond, VA
Hampton Roads, VA
Charlottesville, VA
705 Peregrine Way, Suite 100
Charlottesville, VA 22903
434-295-0700 Fax: 434-295-2105
www.daa.com

EROSION AND SEDIMENT CONTROL - PHASE 1

RAMBLEWOOD PARK IMPROVEMENTS

RAMBLEWOOD PARK, HARRISONBURG, VIRGINIA

REVISIONS

DESIGNED BY:	JWS
DRAWN BY:	ECB
CHECKED BY:	GWC
SCALE:	1" = 50'
DATE:	MAY 10, 2013
PROJECT NUMBER:	06154-192CV

C2.3

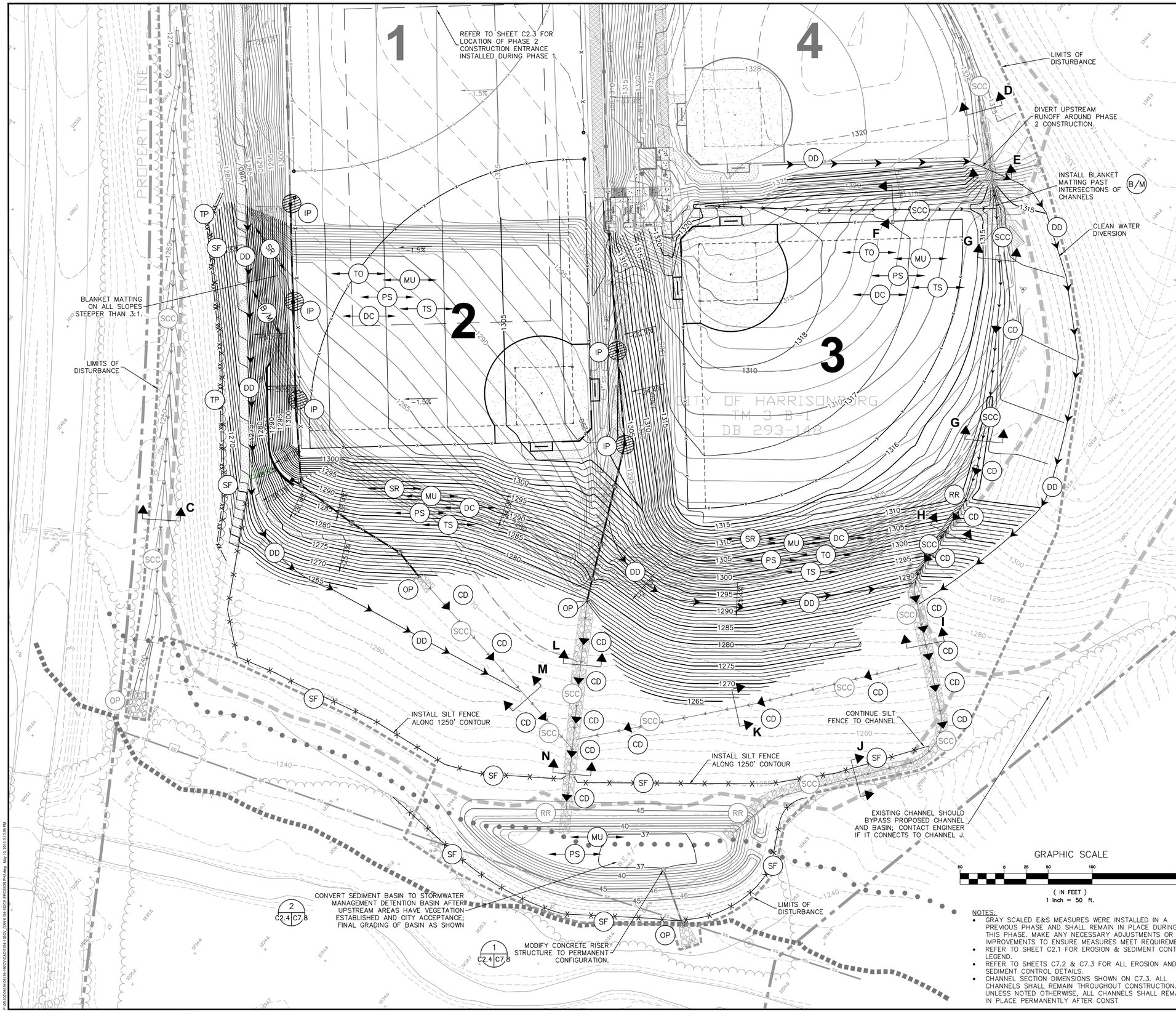

CONSTRUCTION SCHEDULE -- PHASE 2 - FINAL GRADING AND SITE IMPROVEMENTS

a. INSPECT CONSTRUCTION ENTRANCE, CONVEYANCE CHANNELS AND SEDIMENT BASIN (WHICH SHOULD HAVE REMAINED FROM PHASE 1). MAKE ANY IMPROVEMENTS NECESSARY TO MEET THE DETAILS ON THE PLANS OR THE SPECIFICATIONS OF THE EROSION AND SEDIMENT CONTROL HANDBOOK.
b. MUCK SEDIMENT BASIN TO ORIGINAL DESIGN ELEVATIONS.
c. INSTALL PERIMETER EROSION AND SEDIMENT CONTROL MEASURES INCLUDING SILT FENCE, DIVERSION DIKES AND TREE PROTECTION. EROSION AND SEDIMENTATION CONTROLS SHALL BE MAINTAINED UNTIL UPSTREAM VEGETATIVE COVER IS ESTABLISHED.
d. REMOVE EXISTING VEGETATION AND BEGIN TO PLACE FILL.
e. INSTALL DIVERSION MEASURES ACROSS FILL AREAS AS NEEDED TO PREVENT RILL EROSION FROM OCCURRING. ENSURE ALL RUNOFF FROM THE DISTURBED AREA (EXCLUDING PARKING LOT) IS DIVERTED TO THE SEDIMENT BASIN.
f. INSTALL/MAINTAIN ONSITE CHANNELS AS SHOWN. AS FILL AND CONSTRUCTION PROGRESSES, SOME MEASURE WILL NEED TO BE MOVED AND ADJUSTED. IMMEDIATELY SEED CONVEYANCE CHANNELS AND INSTALL CHECK DAMS AS ARE THEY ARE BROUGHT TO FINAL GRADE.
g. USE SURFACE ROUGHING THROUGHOUT FILL ACTIVITIES TO HELP PREVENT RILL EROSION ALONG LONG, DISTURBED SLOPES.
h. BEGIN STORM SEWER INSTALLATION. INSTALL STORM DRAIN INLET PROTECTION AS INLETS ARE INSTALLED, CULVERT INLET PROTECTION AS CULVERTS ARE INSTALLED AND OUTLET PROTECTION PRIOR TO STORM PIPES RECEIVING RUNOFF.
i. INSTALL ADDITIONAL EROSION AND SEDIMENT CONTROL MEASURES AS SHOWN ON THE PLANS AND AS DEEMED NECESSARY BY THE RLD, ENGINEER OR THE CITY.
j. PROCEED WITH INSTALLATION OF ADDITIONAL UTILITIES AND HARDSCAPES.
k. APPLY TOPSOIL, PERMANENT SEEDING AND STRAW MULCHING TO ALL AREAS WITHIN THE LIMITS OF DISTURBANCE, OUTSIDE OF THE HARDSCAPE AND MULCHED LANDSCAPED AREAS. APPLY BLANKET MATTING TO ALL SLOPES GREATER THAN 3:1.

CONSTRUCTION SCHEDULE -- STORMWATER MANAGEMENT DETENTION BASIN

a. ONCE ALL UPSTREAM AREAS HAVE BEEN STABILIZED AND HAVE WELL ESTABLISHED VEGETATION, NOTIFY THE INSPECTORS FOR AN INSPECTION.
b. ONCE THE INSPECTOR GIVES APPROVAL, THE SEDIMENT BASIN MAY BE CONVERTED TO THE FINAL STORMWATER MANAGEMENT BASIN. PERIMETER EROSION CONTROL MEASURES NOT ASSOCIATED WITH THE BASIN SHALL BE REMOVED.
c. MUCK SEDIMENT BASIN AND RE-GRADE AS SHOWN ON PLANS.
d. MODIFY OUTLET STRUCTURE AS SHOWN IN DETAILS.
e. ONCE FINAL GRADES HAVE BEEN ACHIEVED, IMMEDIATELY APPLY PERMANENT SEEDING AND STRAW MULCH.
f. IMMEDIATELY APPLY PERMANENT SEEDING AND STRAW MULCH.

MAINTENANCE

PRIOR TO ANY LAND DISTURBING ACTIVITY, CONTRACTOR SHALL PROVIDE THE NAME, CERTIFICATION INFORMATION, AND CONTACT INFORMATION OF THE DESIGNATED RESPONSIBLE LAND DISTURBER (RLD) TO THE CITY OF HARRISONBURG.

IN GENERAL, ALL EROSION AND SEDIMENT CONTROL MEASURES WILL BE CHECKED AT LEAST EVERY TWO WEEKS AND/OR AFTER EACH SIGNIFICANT RAINFALL. DURING CONSTRUCTION, THE CONTRACTOR'S DESIGNATED RLD WILL BE RESPONSIBLE FOR INSPECTING AND REPAIRING DAMAGED EROSION/SEDIMENT CONTROL MEASURES. THE FOLLOWING ITEMS WILL BE CHECKED IN PARTICULAR:

1. THE SILT FENCE BARRIER WILL BE CHECKED FOR UNDERMINING OR DETERIORATION OF THE FABRIC. SEDIMENT SHALL BE REMOVED WHEN THE LEVEL OF SEDIMENT DEPOSITION REACHES HALF WAY TO TOP OF BARRIER.
2. THE SEDIMENT BASIN SHALL BE CHECK REGULARLY TO ENSURE OUTFALL STRUCTURE IS WORKING PROPERLY AND THE BANKS HAVE A HEALTHY STAND OF VEGETATION. THE BASIN SHALL BE MUCKED WHEN SEDIMENT REACHES HALF OF THE WET STORAGE VOLUME.
3. DIVERSION DIKES AND CHANNELS SHALL BE INSPECTED TO ENSURE THEY SHOW NO SIGNS OF EROSION OR DEGRADATION.
4. THE SEEDED AREAS WILL BE CHECKED REGULARLY TO ENSURE THAT A GOOD STAND IS MAINTAINED. AREAS SHOULD BE FERTILIZED AND RESEEDED AS NEEDED. REFER TO ESC TECHNICAL BULLETIN #4.
5. PROVIDE REMEDIAL STABILIZATION AND SEEDING FOR A PERIOD OF ONE YEAR AFTER CONSTRUCTION.

FOR ADDITIONAL DETAIL, REFER TO THE ON-SITE COPY OF THE STORMWATER POLLUTION PREVENT PLAN (SWPPP).

GRAPHIC SCALE

50 0 25 50 100 200

(IN FEET)
1 inch = 50 ft.

NOTES:

- GRAY SCALED E&S MEASURES WERE INSTALLED IN A PREVIOUS PHASE AND SHALL REMAIN IN PLACE DURING THIS PHASE. MAKE ANY NECESSARY ADJUSTMENTS OR IMPROVEMENTS TO ENSURE MEASURES MEET REQUIREMENTS.
- REFER TO SHEET C2.1 FOR EROSION & SEDIMENT CONTROL LEGEND.
- REFER TO SHEETS C7.2 & C7.3 FOR ALL EROSION AND SEDIMENT CONTROL DETAILS.
- CHANNEL SECTION DIMENSIONS SHOWN ON C7.3. ALL CHANNELS SHALL REMAIN THROUGHOUT CONSTRUCTION. UNLESS NOTED OTHERWISE, ALL CHANNELS SHALL REMAIN IN PLACE PERMANENTLY AFTER CONST

LINE LEGEND

SEE SHEET C0.1 FOR FULL LEGEND

Proposed Final 5' Contour	1310
Proposed Final 1' Contour	1304
Landfill Cap 10' Contour	1290
Landfill Cap 2' Contour	
Existing 10' Contour	1290
Existing 2' Contour	
Limits of Disturbance	
Limits of Ex. Landfill Waste	
Floodway	
Floodplain	
Gas Surface Collector Trench	
Gas Surface Collector Header	
Toe Drain	
Limits of 40-mil LLDPE Cap	

COMMONWEALTH OF VIRGINIA
JULIA WALLACE SKARE
Lic. No. 43893
3/10/13
PROFESSIONAL ENGINEER

Draper Aden Associates
Engineering • Surveying • Environmental Services
Blacksburg, VA
Richmond, VA
Hampton Roads, VA
Charlottesville, VA
705 Pantops Center Drive
Charlottesville, VA 22903
434-295-0700 Fax: 434-295-2105
www.dai.com

EROSION AND SEDIMENT CONTROL - PHASE 2

RAMBLEWOOD PARK IMPROVEMENTS

RAMBLEWOOD PARK, HARRISONBURG, VIRGINIA

REVISIONS

DESIGNED BY:	JWS
DRAWN BY:	ECB
CHECKED BY:	GWC
SCALE:	1" = 50'
DATE:	MAY 10, 2013
PROJECT NUMBER:	06154-192CV

C2.4

NOTES:
- FENCE INSTALLATION SHALL NOT DISTURB ANY WELLS, VENTS OR PROBES, OR OTHER EXISTING STRUCTURES OR UTILITIES. CONTACT ENGINEER IMMEDIATELY IF ANY CONFLICTS ARISE.
- CLEAR AND GRUB ONLY AS NEEDED TO INSTALL FENCE. COORDINATE WITH ENGINEER AND CITY OF HARRISONBURG PRIOR TO ALL TREE REMOVAL.

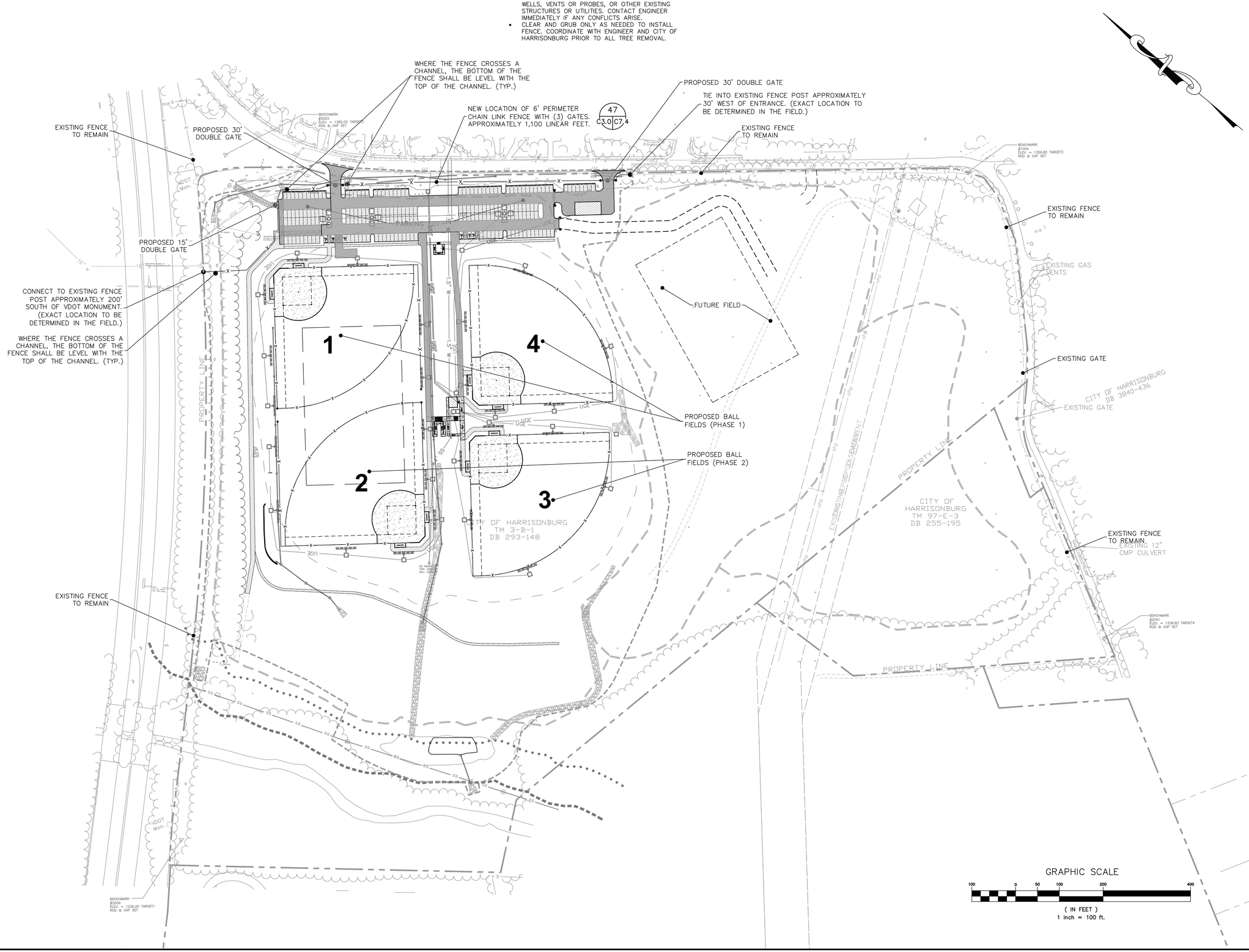

COMMONWEALTH OF VIRGINIA
JULIA WALLACE SKARE
Lic. No. 43893
5/10/13
PROFESSIONAL ENGINEER

Draper Aden Associates
Engineering • Surveying • Environmental Services
Charlottesville, VA
Blacksburg, VA
Richmond, VA
Hampton Roads, VA
Charlottesville, VA 22903
434-295-0700 Fax: 434-295-2105
www.daa.com

OVERALL SITE AND PERIMETER FENCE LAYOUT
RAMBLEWOOD PARK IMPROVEMENTS
RAMBLEWOOD PARK, HARRISONBURG, VIRGINIA

REVISIONS

DESIGNED BY:	JWS
DRAWN BY:	ECB
CHECKED BY:	GWC
SCALE:	1" = 100'
DATE:	MAY 10, 2013
PROJECT NUMBER:	06154-192CV

C3.0

P:\06\06154\06154-192CV\CAD\06154-192CV_DSR\06154-192CV-SITE FENCE.dwg May 10, 2013 3:14:06 PM

193 TOTAL 9'x18' PARKING SPACES (INCLUDING 6 HANDICAPPED)

WHEEL STOPS–ALL PARKING SPACES (57) ALONG NORTH SIDE. NO CURB ALONG THIS EDGE.

ONLY INSTALL STONE BASE COURSE AS SHOWN AT WEST END OF PARKING LOT IN PHASE 1; TO BE PAVED DURING PHASE 2

SAWCUT EXISTING PAVEMENT AND REMOVE AT LEAST 1' FOR SMOOTH TRANSITION (TYP. EACH ENTRANCE)

RIP–RAP CHANNEL

6' TALL PERIMETER CHAIN LINK FENCE

CG–2 AT ENTRANCE

GATE

PARKING LOT

RAMBLEWOOD ROAD

GATED MAINTENANCE YARD WITH 8 ADDITIONAL PARKING SPACES

N: 6833538.66
E: 11372556.89

PIPE GATE

30'x60' METAL PREFABRICATED MAINTENANCE BUILDING; FF: 1324.1'

N: 6833563.67
E: 11372494.65

TWO BOLLARDS W/ STAINLESS STEEL CHAIN BETWEEN.

NO CURB IN MAINTENANCE AREA

12' WIDE GRAVEL ACCESS ROAD; 8" OF VDOT 21–B STONE WITH NON–WOVEN SEPARATION GEOTEXTILE FABRIC UNDER–LAY.

15' GATE

CG–7 (12')

CG–6

12' WIDE CONSTRUCTION ENTRANCE FOR USE UNTIL PHASE 2 IS COMPLETED.

CG–7 (28')

CG–2 (TYP)

(8) CONCRETE STEPS

10' ASPHALT LOOP TRAIL AND MAINTENANCE ROAD; ONLY INSTALL STONE BASE COURSE IN PHASE 1

INSTALL SETTLEMENT PLATE AT HOME PLATE. PLATE TO BE PLACED ON TOP OF THE TWO FEET OF CLEAN COVER OVER THE CAP AND EXTEND TO THE FILL/TOPSOIL INTERFACE.

TAPER CURB OVER 5'

HANDICAPPED SPACES (9'x18'), WHEEL STOPS AND SIGNS (TYP.)

5' ASPHALT WALK AND 5' LANDSCAPE STRIP ALONG PARKING LOT

30' TALL BACKSTOPS WITH NO OVERHANG (THREE 20' SIDES). (TYP.)

N: 6833985.39
E: 11371956.61

HEAVY DUTY ASPHALT PAD FOR VENDING TRUCK AREA

CURB TO BE FLUSH WITH PAVEMENT IN FRONT OF HANDICAPPED SPACES WITH TRUNCATED DOMES (TYP.)

CONCRETE HANDICAPPED RAMP WITH HANDRAILS

10' LIGHT DUTY ASPHALT PATHS TO DUGOUTS (TYP.)

BEACON ATHLETICS 'BARRIER NETTING' ALONG THIRD BASE LINE FENCE FOR 150' (FIELD 1). TOP OF NET SHALL BE 40' ABOVE GROUND.

WEBSTER & WEBSTER CHAIN LINK FENCE WITH BLACK VINYL AROUND BALL FIELDS (TYP.)

10'x25' BEACON ATHLETICS 'SHADE STRUCTURE' OVER DUGOUTS. DUGOUTS TO HAVE 10'x25' ASPHALT BASE (TYP.)

12' HEAVY DUTY ASPHALT WALKS TO BUILDING & STEPS FOR EMERGENCY ACCESS

WEBSTER & WEBSTER CHAIN LINK FENCE WITH BLACK VINYL AROUND BALL FIELDS (TYP.)

12' TALL FENCE TO END OF INFIELD DIRT; 6' TALL BEYOND TO OUTFIELD FENCE (THIRD BASE LINE OF FIELD 1).

REFER TO SHEET C3.2 FOR TYPICAL FIELD DIMENSIONS.

1

4

REFER TO SHEET C3.2 FOR TYPICAL FIELD DIMENSIONS.

6' TALL PERMANENT OUTFIELD FENCE

20'x24' PREFABRICATED RESTROOM BUILDING WITH 8'x8' PRESS BOX ON TOP. FF: 1318.7'/1328.0'

N: 6833502.38
E: 11371972.43

N: 6833503.33
E: 11372003.66

LUCK STONE RUCKERSVILLE PREMIUM INFIELD MIX (TYP. 2 FIELDS)

N: 6833461.82
E: 11372039.76

FOUL LINE (TYP.)

12' PASSAGE GATE

12' TALL FENCE (ENTIRE FIRST BASE LINE OF FIELD 1).

10' ASPHALT LOOP TRAIL AND MAINTENANCE ROAD; ONLY INSTALL STONE BASE COURSE IN PHASE 1

(10) 7" STEPS AND (20) 6.5" STEPS

4' TALL REMOVABLE OUTFIELD FENCE (TYP.); 10' PANELS WITH SLEEVES UNDER GROUND SURFACE.

12' TALL FENCE TO END OF INFIELD DIRT; 6' TALL BEYOND (FIRST AND THIRD BASE LINES OF FIELD 4).

SITE WALLS ALONG RAMPS AND STAIRS.

10'x25' BEACON ATHLETICS 'SHADE STRUCTURE' OVER DUGOUTS. DUGOUTS TO HAVE 10'x25' LIGHT DUTY ASPHALT BASE (TYP.)

INSTALL SETTLEMENT PLATE AT HOME PLATE. PLATE TO BE PLACED ON TOP OF THE TWO FEET OF CLEAN COVER OVER THE CAP AND EXTEND TO THE FILL/TOPSOIL INTERFACE.

CONCRETE HANDICAPPED RAMP WITH HANDRAILS

10' LIGHT DUTY ASPHALT PATHS TO DUGOUTS (TYP.)

SEE INSET ON THIS SHEET FOR ADDITIONAL DIMENSIONS.

CITY OF HARRISONBURG
TM 3–B–1
DB 293–148

PROPERTY LINE

SS MANHOLE
TOP: 1288.00
INV: 1281.02

DIRT INFIELD MIX

HEAVY DUTY ASPHALT

LIGHT DUTY ASPHALT

GRAVEL (VDOT 21–B)

RIP–RAP

BLANKET MATTING

NOTES:
1. ALL PATHS SHALL BE HANDICAPPED ACCESSIBLE UNLESS OTHERWISE NOTED (OR WHERE STAIRS ARE SHOWN). NO SLOPES SHALL EXCEED 20:1 EXCEPT ON THE NOTED RAMPS WHICH SHALL NOT EXCEED 12:1. CROSS SLOPES SHALL NOT EXCEED 2%.
2. BALL FIELD ITEMS BY OWNER (BENCHES, BLEACHERS, FOUL POLES, BASES, ETC.); TYPICAL ALL FIELDS.
3. RADII ARE 5' UNLESS OTHERWISE NOTED.

GRAPHIC SCALE

50 0 25 50 100 200

(IN FEET)
1 inch = 50 ft.

INSET
SCALE: 1"=20'

COMMONWEALTH OF VIRGINIA
Julia W. Skare
JULIA WALLACE SKARE
Lic. No. 43893
5/10/13
PROFESSIONAL ENGINEER

Draper Aden Associates
Engineering • Surveying • Environmental Services
Blacksburg, VA
Richmond, VA
Hampton Roads, VA
Charlottesville, VA
705 Harris Street, Suite E
Charlottesville, VA 22903
434-295-0700 Fax: 434-295-2105
www.daa.com

SITE PLAN - PHASE 1

RAMBLEWOOD PARK IMPROVEMENTS

RAMBLEWOOD PARK, HARRISONBURG, VIRGINIA

REVISIONS

DESIGNED BY:	JWS
DRAWN BY:	ECB
CHECKED BY:	GWC
SCALE:	1" = 50'
DATE:	MAY 10, 2013
PROJECT NUMBER:	06154-192CV

C3.1

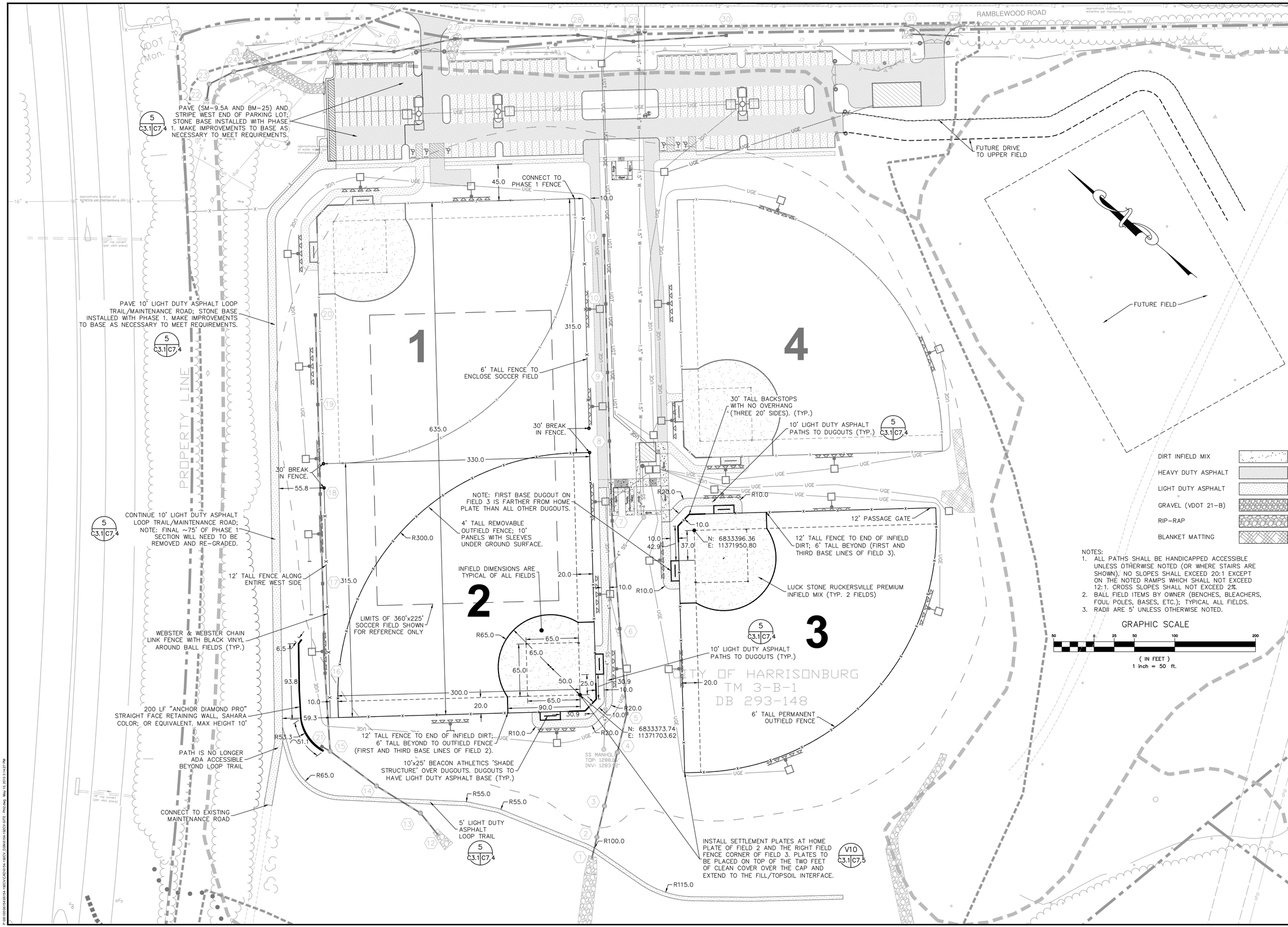

COMMONWEALTH OF VIRGINIA
Julia W. Skare
JULIA WALLACE SKARE
Lic. No. 43893
5/10/13
PROFESSIONAL ENGINEER

Draper Aden Associates
Engineering • Surveying • Environmental Services
Blacksburg, VA
Richmond, VA
Hampton Roads, VA
Charlottesville, VA
705 Harris Street, Suite E
Charlottesville, VA 22903
434-295-0700 Fax: 434-295-2105
www.daa.com

SITE PLAN - PHASE 2

RAMBLEWOOD PARK IMPROVEMENTS

RAMBLEWOOD PARK, HARRISONBURG, VIRGINIA

REVISIONS

DESIGNED BY:	JWS
DRAWN BY:	ECB
CHECKED BY:	GWC
SCALE:	1" = 50'
DATE:	MAY 10, 2013
PROJECT NUMBER:	06154-192CV

C3.2

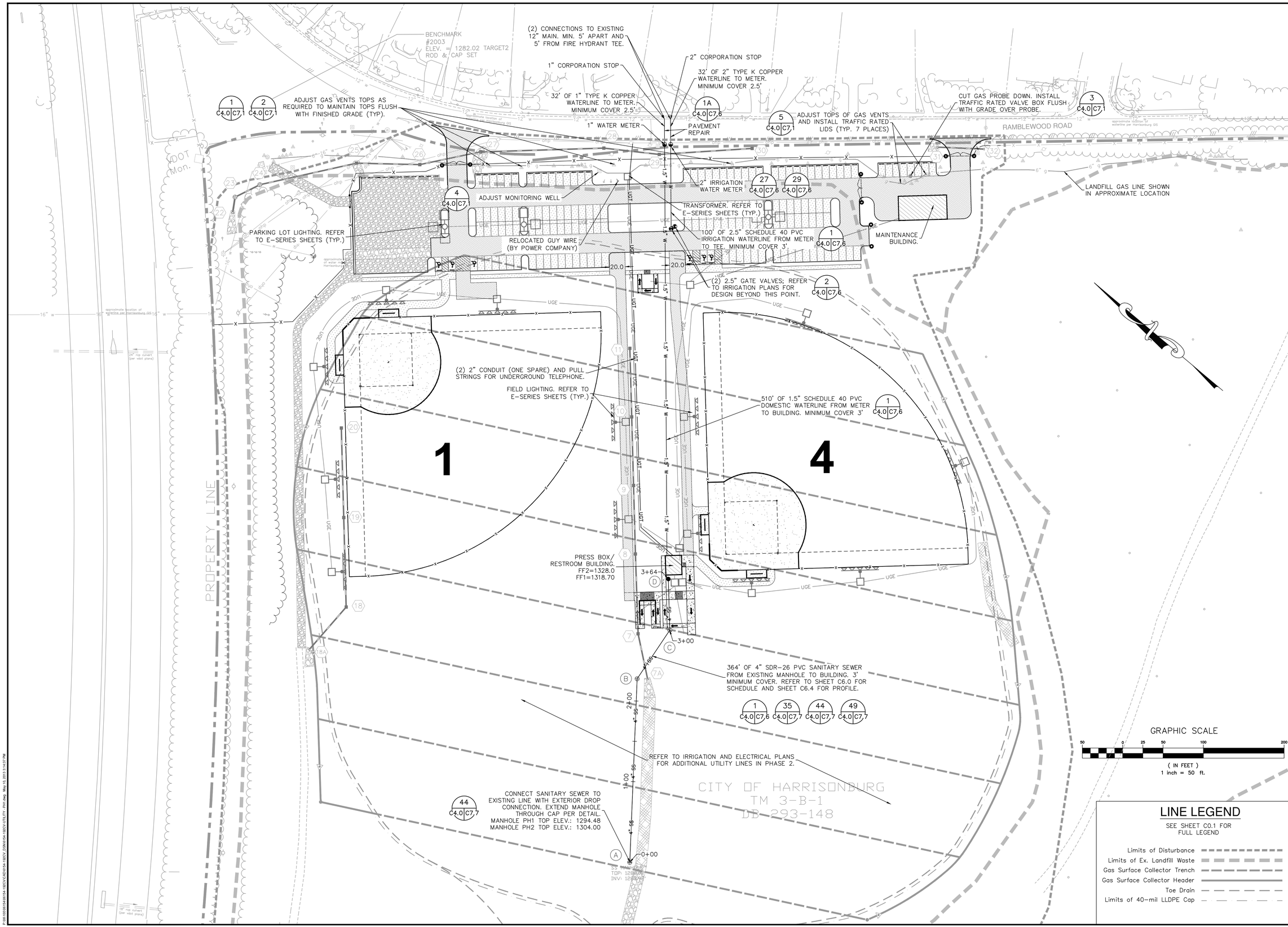

LINE LEGEND

SEE SHEET C0.1 FOR FULL LEGEND

- Limits of Disturbance
- Limits of Ex. Landfill Waste
- Gas Surface Collector Trench
- Gas Surface Collector Header
- Toe Drain
- Limits of 40-mil LLDPE Cap

COMMONWEALTH OF VIRGINIA
JULIA WALLACE SKARE
Lic. No. 43893
3/10/13
PROFESSIONAL ENGINEER

Draper Aden Associates
Engineering • Surveying • Environmental Services
Blacksburg, VA
Richmond, VA
Hampton Roads, VA
Charlottesville, VA
705 Harris Street, Suite E
Charlottesville, VA 22903
434-295-0700 Fax: 434-295-2105
www.daa.com

UTILITY PLAN - PHASE 1

RAMBLEWOOD PARK IMPROVEMENTS

RAMBLEWOOD PARK, HARRISONBURG, VIRGINIA

REVISIONS

DESIGNED BY:	JWS
DRAWN BY:	ECB
CHECKED BY:	GWC
SCALE:	1" = 50'
DATE:	MAY 10, 2013
PROJECT NUMBER:	06154-192CV

C4.0

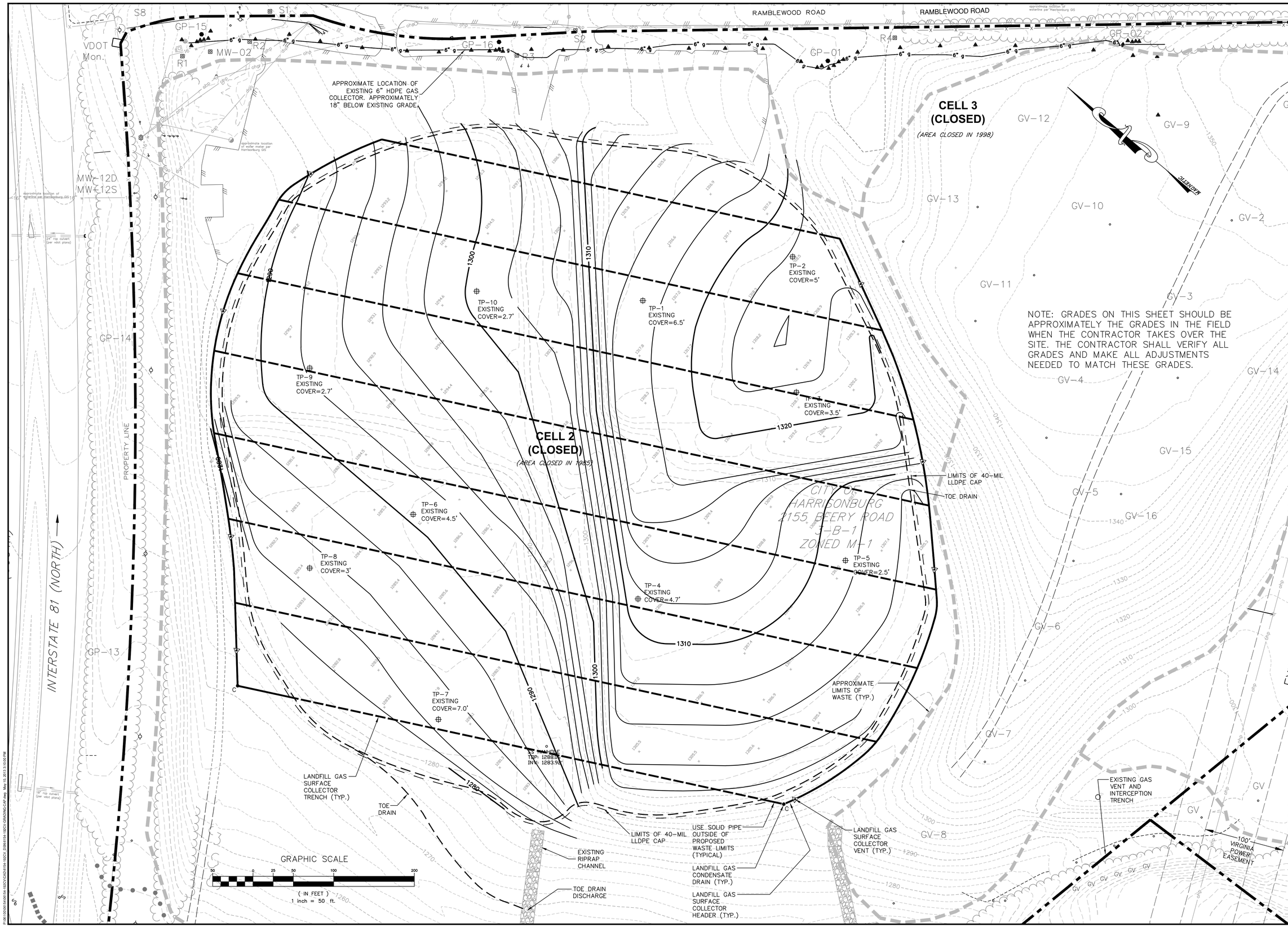

COMMONWEALTH OF VIRGINIA
WILLIAM G. HASE
Lic. No. 21807
5/10/13
PROFESSIONAL ENGINEER

Draper Aden Associates
Engineering • Surveying • Environmental Services
Blacksburg, VA
Richmond, VA
Hampton Roads, VA
Charlottesville, VA
705 Peter Jefferson Pkwy, Ste 5
Charlottesville, VA 22903
434-295-0700 Fax: 434-295-2105
www.daa.com

GRADING PLAN FOR LANDFILL CAP

RAMBLEWOOD PARK IMPROVEMENTS

RAMBLEWOOD PARK, HARRISONBURG, VIRGINIA

REVISIONS

DESIGNED BY:	WGH
DRAWN BY:	NTM
CHECKED BY:	WGH
SCALE:	1" = 50'
DATE:	MAY 10, 2013
PROJECT NUMBER:	06154-192CV

C5.0

PIPE 18A–18 WILL BE INSTALLED WITH PHASE 1 AND REMAIN IN PLACE UNTIL PHASE 2 CONSTRUCTION. 70 LF OF 15" HDPE. PIPE TO EXIT BANK AT ELEV. 1292.0 AND RUN ALONG THE GROUND SURFACE TO ES–1 AS A SLOPE DRAIN. PIPE TO BE STAKED IN PLACE WITH 5' WOODEN STAKES ON EACH SIDE EVERY 10'. ES–1 INV. 1301.25'. REFER TO SCHEDULE FOR INVERT OUT OF STR. 18.

CHANNEL TO CONTINUE AS SHOWN ON E&S PLANS

RAMBLEWOOD ROAD

HANDICAPPED SPACES MAX 50:1 ALL DIRECTIONS

REFER TO SHEET C7.1 FOR VALVE ADJUSTMENT DETAILS

30'X60' METAL PREFABRICATED MAINTENANCE BUILDING; FF: 1324.1'

HOME PLATE ELEV. 1301.87'

1

4

20'x24' PREFABRICATED RESTROOM BUILDING WITH 8'x8' PRESS BOX ON TOP. FF: 1318.7'/1328.0'

HOME PLATE ELEV: 1328.25'

SEE INSET THIS SHEET

PIPE 7A–7 WILL BE INSTALLED WITH PHASE 1 AND REMAIN IN PLACE UNTIL PHASE 2 CONSTRUCTION. 58.5 LF OF 15" HDPE @ 1.23%. ES–1 INV. 1301.25'. REFER TO SCHEDULE FOR INVERT OUT OF STR. 7

SWALE CREATED BY SANITARY SEWER BERM. CONTINUE TO MEET EXISTING CHANNEL.

SWALE TO MEET EXISTING CHANNEL TO REMAIN IN PLACE UNTIL PHASE 2 WORK IS CONSTRUCTED. (OUTSIDE LIMITS OF CAP)

MINIMUM TWO FOOT COVER OVER LIMITS OF LANDFILL CAP

TOP OF BERM TO HAVE A MINIMUM WIDTH OF FIVE FEET

CITY OF HARRISONBURG
TM 3 B 1
DB 293-148

LIMITS OF 40-MIL LLDPE CAP

TOE DRAIN

LANDFILL GAS SURFACE COLLECTOR TRENCH (TYP.)

EXISTING RIPRAP CHANNEL

TOE DRAIN DISCHARGE

PERFORATED PIPE OUTSIDE OF PROPOSED WASTE LIMITS (TYPICAL)

LANDFILL GAS CONDENSATE DRAIN (TYP.)

LANDFILL GAS SURFACE COLLECTOR

LANDFILL GAS SURFACE COLLECTOR VENT (TYP.)

GRAPHIC SCALE

(IN FEET)
1 inch = 50 ft.

INSET

SCALE: 1"=20'

LINE LEGEND

SEE SHEET C0.1 FOR FULL LEGEND

- Proposed Final 5' Contour — 1310
- Proposed Final 1' Contour — 1304
- Landfill Cap 10' Contour — 1290
- Landfill Cap 2' Contour
- Existing 10' Contour — 1290
- Existing 2' Contour
- Limits of Disturbance
- Limits of Ex. Landfill Waste
- Gas Surface Collector Trench
- Gas Surface Collector Header
- Toe Drain
- Limits of 40–mil LLDPE Cap

COMMONWEALTH OF VIRGINIA
JULIA WALLACE SKARE
Lic. No. 43893
3/10/13
PROFESSIONAL ENGINEER

Draper Aden Associates
Engineering • Surveying • Environmental Services
Blacksburg, VA
Richmond, VA
Hampton Roads, VA
Charlottesville, VA
705 Harris Street, Suite E
Charlottesville, VA 22903
434-295-0700 Fax: 434-295-2105
www.daa.com

GRADING PLAN - PHASE 1

RAMBLEWOOD PARK IMPROVEMENTS

RAMBLEWOOD PARK, HARRISONBURG, VIRGINIA

REVISIONS

DESIGNED BY:	JWS
DRAWN BY:	ECB
CHECKED BY:	GWC
SCALE:	1" = 50'
DATE:	MAY 10, 2013
PROJECT NUMBER:	06154-192CV

C5.1

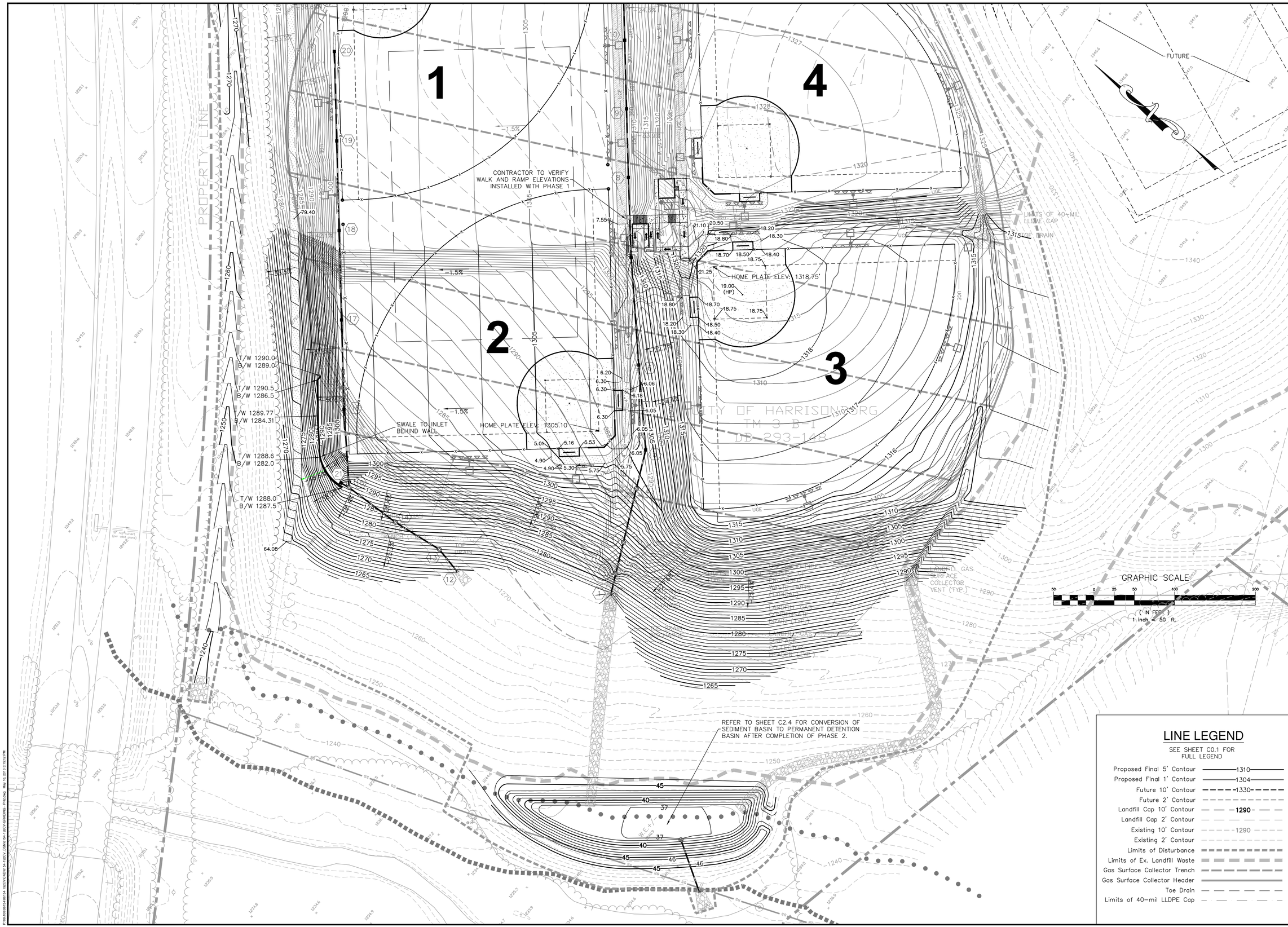

LINE LEGEND

SEE SHEET C0.1 FOR FULL LEGEND

- Proposed Final 5' Contour — 1310
- Proposed Final 1' Contour — 1304
- Future 10' Contour — 1330
- Future 2' Contour
- Landfill Cap 10' Contour — 1290
- Landfill Cap 2' Contour
- Existing 10' Contour — 1290
- Existing 2' Contour
- Limits of Disturbance
- Limits of Ex. Landfill Waste
- Gas Surface Collector Trench
- Gas Surface Collector Header
- Toe Drain
- Limits of 40-mil LLDPE Cap

COMMONWEALTH OF VIRGINIA
Julia W. Skaare
JULIA WALLACE SKARE
Lic. No. 43893
5/10/13
PROFESSIONAL ENGINEER

Draper Aden Associates
Engineering • Surveying • Environmental Services
Charlottesville, VA
705 Harris St., Suite E
Charlottesville, VA 22903
434-295-0700 Fax: 434-295-2105
www.dai.com
Blacksburg, VA
Richmond, VA
Hampton Roads, VA

GRADING PLAN - PHASE 2

RAMBLEWOOD PARK IMPROVEMENTS

RAMBLEWOOD PARK, HARRISONBURG, VIRGINIA

REVISIONS

DESIGNED BY:	JWS
DRAWN BY:	ECB
CHECKED BY:	GWC
SCALE:	1" = 50'
DATE:	MAY 10, 2013
PROJECT NUMBER:	06154-192CV

C5.2

COMMONWEALTH OF VIRGINIA
JULIA WALLACE SKARE
Lic. No. 43893
5/10/13
PROFESSIONAL ENGINEER

Draper Aden Associates
Engineering • Surveying • Environmental Services

Charlottesville, VA
705 Harris Street, Suite E
Charlottesville, VA 22903
434-295-0700 Fax: 434-295-2105
www.dai.com

Blacksburg, VA
Richmond, VA
Hampton Roads, VA

PRE-DEVELOPED DRAINAGE AREA MAP

RAMBLEWOOD PARK IMPROVEMENTS

RAMBLEWOOD PARK, HARRISONBURG, VIRGINIA

REVISIONS

DESIGNED BY:	JWS
DRAWN BY:	ECB
CHECKED BY:	GWC
SCALE:	1" = 100'
DATE:	MAY 10, 2013
PROJECT NUMBER:	06154-192CV

C5.3

I:\06-0[illegible]\06154-192CV\CADD\154-192CV-[illegible]\154-192CV-PRE-DEV DRAINAGE.dwg May 10, 2013 3:15:18 PM

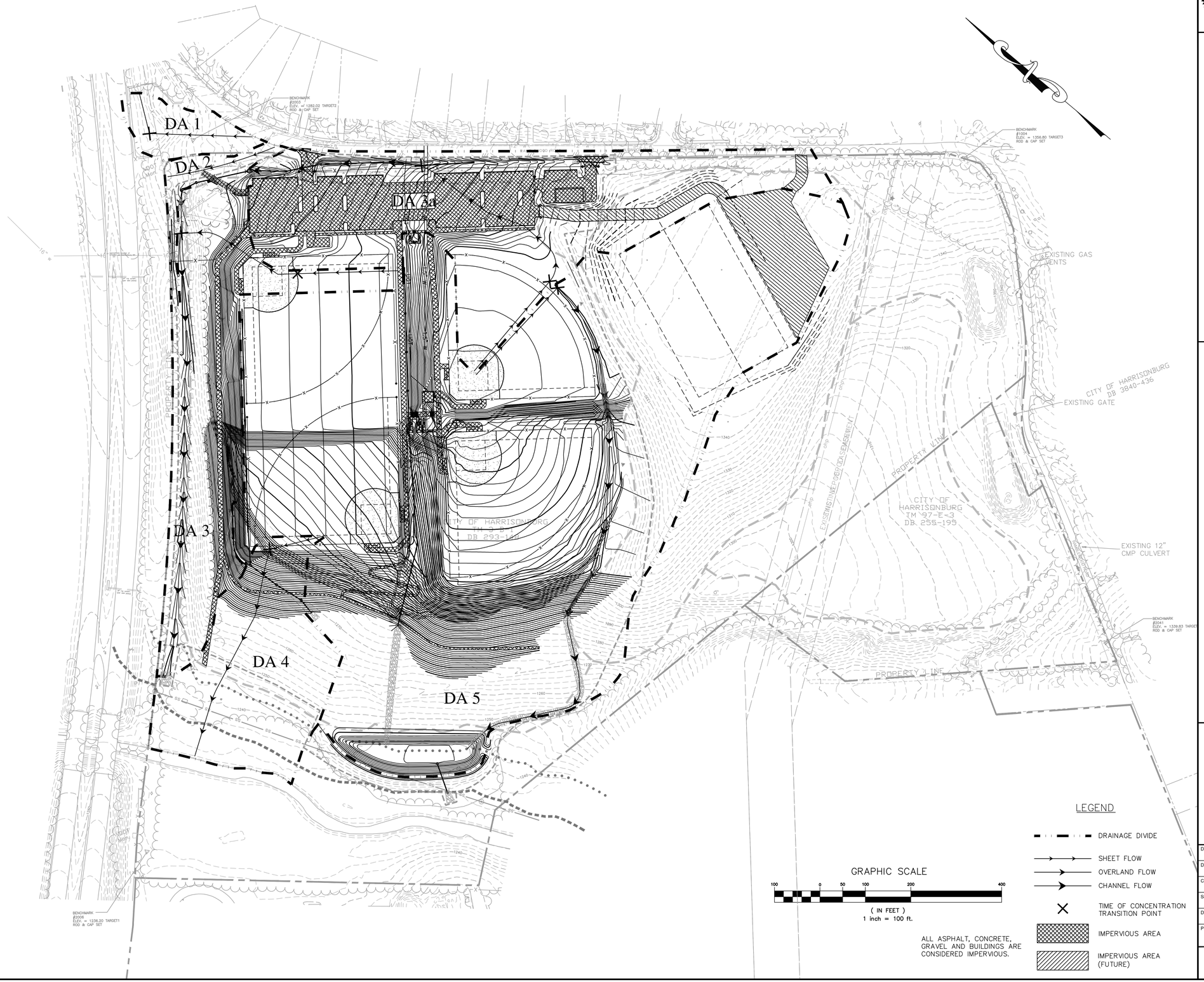

COMMONWEALTH OF VIRGINIA
JULIA WALLACE SKARE
Lic. No. 43893
3/10/13
PROFESSIONAL ENGINEER

Draper Aden Associates
Engineering • Surveying • Environmental Services

Charlottesville, VA
705 Harris Street, Suite E
Charlottesville, VA 22903
434-295-0700 Fax: 434-295-2105
www.dai.com

Blacksburg, VA
Richmond, VA
Hampton Roads, VA

POST-DEVELOPED DRAINAGE AREA MAP
RAMBLEWOOD PARK IMPROVEMENTS
RAMBLEWOOD PARK, HARRISONBURG, VIRGINIA

REVISIONS

DESIGNED BY:	JWS
DRAWN BY:	ECB
CHECKED BY:	GWC
SCALE:	1" = 100'
DATE:	MAY 10, 2013
PROJECT NUMBER:	06154-192CV

C5.4

P:\06154\06154-192CV\C5\06154-192CV-POST-DEV DRAINAGE.dwg May 10, 2013 3:15:02 PM

V9
C6.0 | C7.5
TYP.

STORM PIPE SCHEDULE			
PIPE	SIZE	LENGTH	SLOPE
1–2	15"	24.23 LF	6.19%
2–3	15"	39.72 LF	13.85%
3–4	15"	68.39 LF	9.94%
4–5	15"	49.42 LF	1.76%
5–6	15"	105.56 LF	1.00%
6–7	15"	134.07 LF	1.00%
7–8	15"	98.94 LF	1.00%
8–9	15"	85.00 LF	0.50%
9–10	15"	85.00 LF	0.50%
10–11	15"	85.00 LF	0.24%
12–13	15"	32.02 LF	2.80%
13–14	15"	63.76 LF	6.12%
14–15	15"	71.92 LF	9.94%
15–16	15"	96.92 LF	9.96%
15–21	15"	11.71 LF	2.00%

STORM PIPE SCHEDULE			
PIPE	SIZE	LENGTH	SLOPE
16–17	15"	111.00 LF	1.71%
17–18	15"	111.00 LF	0.99%
18–19	15"	111.00 LF	0.50%
19–20	15"	111.00 LF	0.49%
22–23	18"	16.30 LF	3.07%
23–24	18"	34.36 LF	6.98%
24–25	18"	122.53 LF	6.37%
25–26	18"	78.66 LF	5.72%
26–27	18"	81.47 LF	3.44%
27–28	18"	148.18 LF	4.56%
28–29	18"	69.09 LF	3.69%
29–30	18"	115.33 LF	5.64%
31–32	15"	43.79 LF	2.28%

V6
C6.0 | C7.5
TYP.

V7
C6.0 | C7.5
TYP.

V8
C6.0 | C7.5
TYP.

NOTES:
1. MINIMUM PIPE SIZE IS 15".
2. IF ANY STRUCTURES ARE OVER 12' DEEP, THEY SHALL HAVE SAFETY SLABS.

SANITARY SEWER STRUCTURE SCHEDULE	
STRC. NUMBER	STRC. DATA
A	Ex. Sanitary MH CONVERT TO DROP MH STA: 0+00.00 TOP: 1294.48 (PH 1) INV. IN: 1291.00 (B, NE) INV. OUT: 1283.92 (Ex. MH, SW)
B	SANITARY MH STA: 2+27.56 TOP: 1302.58 INV. IN: 1298.90 (C, E) INV. OUT: 1298.80 (A, SW)
C	SANITARY DROP MH STA: 3+00.07 TOP: 1318.00 INV. IN: 1312.98 (D, NE) INV. OUT: 1303.75 (B, W)
D	CLEAN OUT @ BLDG STA: 3+63.53 TOP: 1318.60 INV. OUT: 1314.25 (C, SW)

SANITARY SEWER PIPE SCHEDULE			
PIPE	SIZE	LENGTH	SLOPE
A–B	4"	227.56 LF	3.43%
B–C	4"	72.51 LF	6.69%
C–D	4"	63.47 LF	2.00%

SANITARY PIPE SHALL BE SDR–26 PVC

7
C6.0 | C7.4
TYP.

STORM STRUCTURE SCHEDULE	
STRC. NUMBER	STRC. DATA
1	HDPE ES–1 STA: 0+00.00 TOP: 1277.36 INV. IN: 1276.00 (2, NE)
2	VDOT MANHOLE STA: 0+24.23 TOP: 1285.00 INV. IN: 1281.50 (3, NE) INV. OUT: 1277.50 (1, SW)
3	VDOT MANHOLE STA: 0+63.95 TOP: 1292.01 INV. IN: 1287.10 (4, NE) INV. OUT: 1287.00 (2, SW)
4	VDOT MANHOLE STA: 1+32.34 TOP: 1304.50 INV. IN: 1298.50 (5, NE) INV. OUT: 1293.90 (3, SW)
5	15" INLINE DRAIN W STD GRATE STA: 1+81.76 TOP: 1304.15 INV. IN: 1299.47 (6, NE) INV. OUT: 1299.37 (4, SW)
6	15" INLINE DRAIN W STD GRATE STA: 2+87.32 TOP: 1305.20 INV. IN: 1300.63 (7, NE) INV. OUT: 1300.53 (5, SW)
7	15" INLINE DRAIN W SOLID TOP STA: 4+21.39 TOP: 1309.72 INV. IN: 1302.07 (8, NE) INV. OUT: 1301.97 (6, SW)
8	15" INLINE DRAIN W STD GRATE STA: 5+20.33 TOP: 1306.80 INV. IN: 1303.16 (9, NE) INV. OUT: 1303.06 (7, SW)
9	15" INLINE DRAIN W STD GRATE STA: 6+05.33 TOP: 1306.80 INV. IN: 1303.68 (10, NE) INV. OUT: 1303.58 (8, SW)
10	15" INLINE DRAIN W STD GRATE STA: 6+90.33 TOP: 1306.80 INV. IN: 1304.10 (11, NE) INV. OUT: 1304.10 (9, SW)
11	15" INLINE DRAIN W STD GRATE STA: 7+75.33 TOP: 1306.80 INV. OUT: 1304.30 (10, SW)
12	HDPE ES–1 STA: 0+00.00 TOP: 1271.46 INV. IN: 1270.10 (13, N)
13	VDOT MANHOLE STA: 0+32.02 TOP: 1276.01 INV. IN: 1271.10 (14, N) INV. OUT: 1271.00 (12, S)
14	VDOT MANHOLE STA: 0+95.78 TOP: 1282.14 INV. IN: 1275.10 (15, N) INV. OUT: 1275.00 (13, S)
15	VDOT MANHOLE STA: 1+67.70 TOP: 1288.48 INV. IN: 1282.35 (16, NE) INV. IN: 1284.00 (21, N) INV. OUT: 1282.25 (14, S)
16	18" INLINE DRAIN W STD GRATE STA: 2+64.62 TOP: 1300.75 INV. IN: 1292.10 (17, NE) INV. OUT: 1292.00 (15, SW)

STORM STRUCTURE SCHEDULE	
STRC. NUMBER	STRC. DATA
17	18" INLINE DRAIN W STD GRATE STA: 3+75.62 TOP: 1300.76 INV. IN: 1294.10 (18, NE) INV. OUT: 1294.00 (16, SW)
18	18" INLINE DRAIN W STD GRATE STA: 4+86.62 TOP: 1300.76 INV. IN: 1295.30 (19, NE) INV. OUT: 1295.20 (17, SW)
19	18" INLINE DRAIN W STD GRATE STA: 5+97.62 TOP: 1300.75 INV. IN: 1295.95 (20, NE) INV. OUT: 1295.85 (18, SW)
20	18" INLINE DRAIN W STD GRATE STA: 7+08.62 TOP: 1300.75 INV. OUT: 1296.50 (19, SW)
21	15" INLINE DRAIN W STD GRATE STA: ??? TOP: 1287.19 INV. OUT: 1284.23 (15, S)
22	HDPE ES–1 STA: 0+00.00 TOP: 1275.85 INV. IN: 1274.00 (23, NE)
23	VDOT MANHOLE STA: 0+16.30 TOP: 1279.00 INV. IN: 1274.60 (24, SE) INV. OUT: 1274.50 (22, SW)
24	VDOT MANHOLE STA: 0+50.66 TOP: 1283.24 INV. IN: 1277.10 (25, SE) INV. OUT: 1277.00 (23, NW)
25	VDOT DI–1 STA: 1+73.19 TOP: 1290.00 INV. IN: 1285.00 (26, SE) INV. OUT: 1284.90 (24, NW)
26	VDOT DI–1 STA: 2+51.85 TOP: 1294.00 INV. IN: 1289.60 (27, SE) INV. OUT: 1289.50 (25, NW)
27	VDOT DI–1 STA: 3+33.38 TOP: 1297.51 INV. IN: 1292.50 (28, SE) INV. OUT: 1292.40 (26, NW)
28	VDOT DI–1 STA: 4+81.56 TOP: 1303.46 INV. IN: 1299.35 (29, SE) INV. OUT: 1299.25 (27, NW)
29	VDOT DI–1 STA: 5+50.66 TOP: 1306.96 INV. IN: 1302.00 (30, SE) INV. OUT: 1301.90 (28, NW)
30	VDOT DI–1 STA: 6+65.98 TOP: 1313.02 INV. OUT: 1308.50 (29, NW)
31	ES–1 STA: ??? TOP: 1323.73 INV. IN: 1322.50 (32, SE)
32	ES–1 STA: ??? TOP: 1324.73 INV. OUT: 1323.50 (31, NW)

V5
C6.0 | C7.5
TYP.

COMMONWEALTH OF VIRGINIA
JULIA WALLACE SKARE
Lic. No. 43893
5/10/13
PROFESSIONAL ENGINEER

Draper Aden Associates
Engineering • Surveying • Environmental Services
Blacksburg, VA
Richmond, VA
Hampton Roads, VA
Charlottesville, VA
705 Harris Street, Suite E
Charlottesville, VA 22903
434-295-0700 Fax: 434-295-2105
www.daa.com

STORM SEWER SCHEDULE

RAMBLEWOOD PARK IMPROVEMENTS

RAMBLEWOOD PARK, HARRISONBURG, VIRGINIA

REVISIONS

DESIGNED BY: JWS
DRAWN BY: ECB
CHECKED BY: GWC
SCALE: AS SHOWN
DATE: MAY 10, 2013
PROJECT NUMBER: 06154-192CV

C6.0

P:\06154\06154-192CV\CAD\6154-192CV_DSN\6154-192CV_PROFILES.dwg May 10, 2013 3:13:44 PM

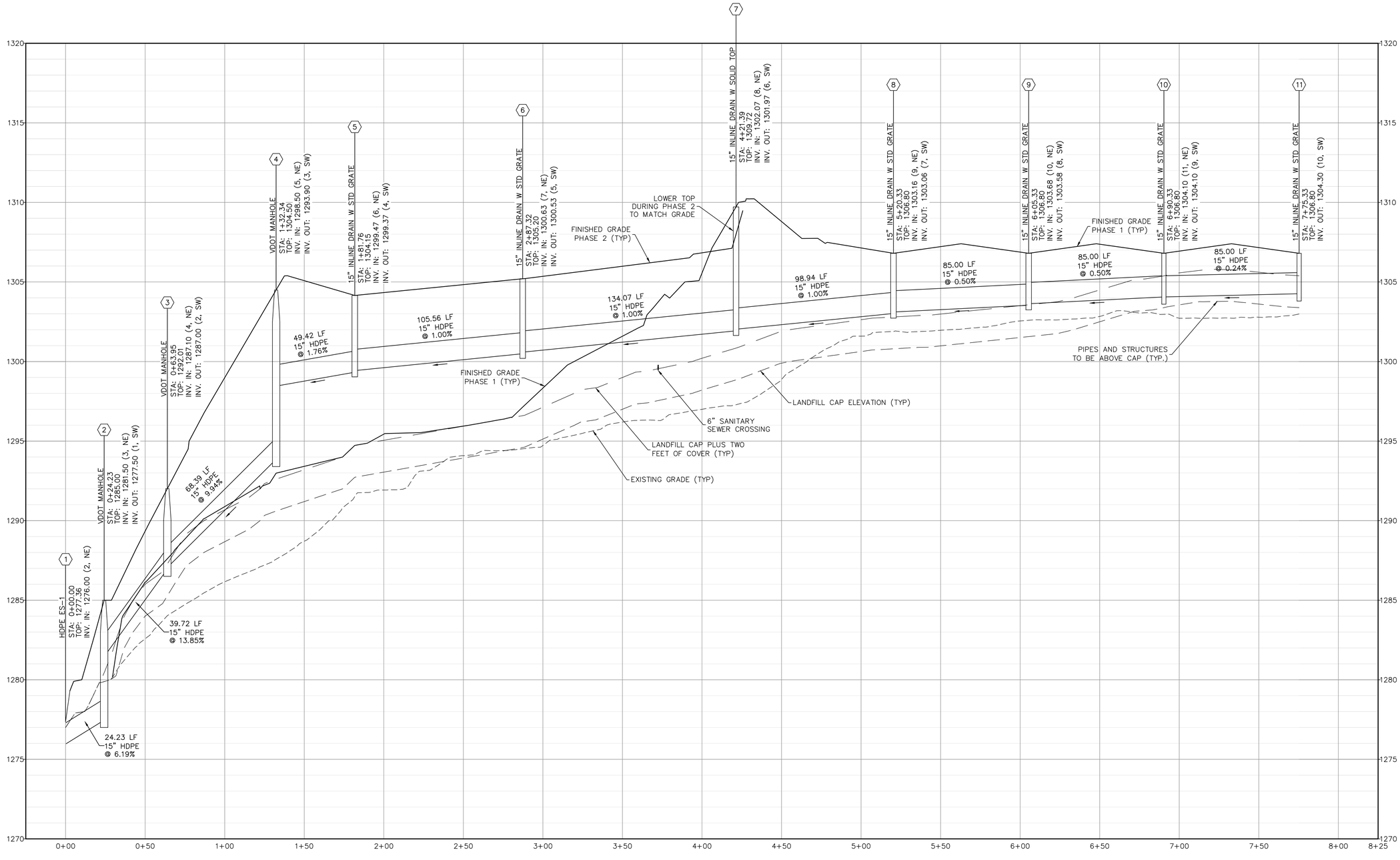

STORM PROFILE 5-15 – Scale: H: 1"=30', V: 10.00:1

NOTE: PROFILE SHOWS COMPLETED PHASE 2 CONDITION. PHASE 1 STOPS AT STRUCTURE 7. REFER TO SHEET C5.1 FOR PIPE 7A-7.

COMMONWEALTH OF VIRGINIA
JULIA WALLACE SKARE
Lic. No. 43893
5/10/13
PROFESSIONAL ENGINEER

Draper Aden Associates
Engineering • Surveying • Environmental Services
Charlottesville, VA
700 Harris Street, Suite E
Charlottesville, VA 22903
434-295-0700 Fax: 434-295-2105
www.daa.com
Blacksburg, VA
Richmond, VA
Hampton Roads, VA

STORM PROFILES - STRUCTURES 5-20

RAMBLEWOOD PARK IMPROVEMENTS

RAMBLEWOOD PARK, HARRISONBURG, VIRGINIA

REVISIONS

DESIGNED BY:	JWS
DRAWN BY:	ECB
CHECKED BY:	GWC
SCALE:	AS SHOWN
DATE:	MAY 10, 2013
PROJECT NUMBER:	06154-192CV

C6.1

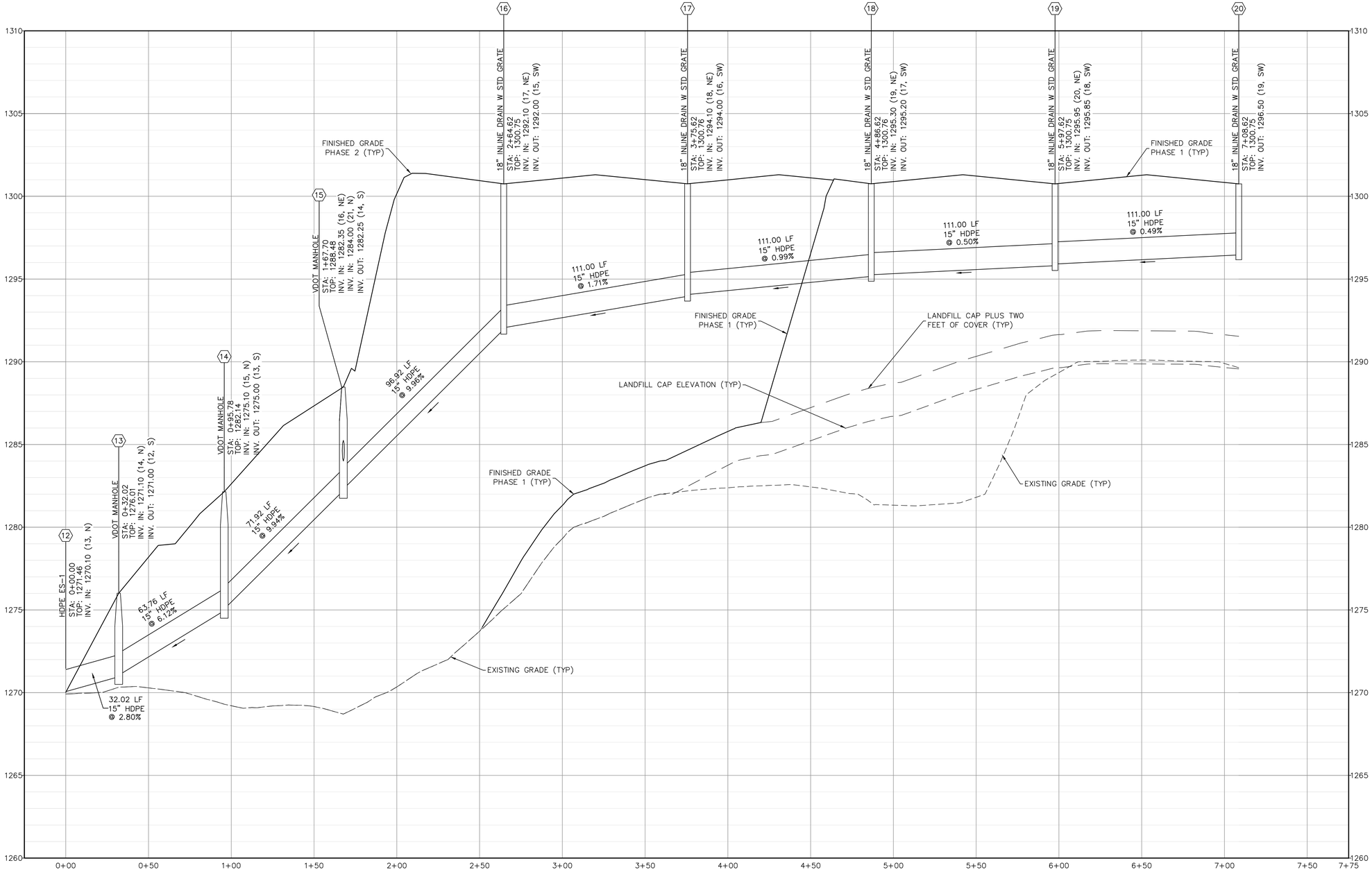

STORM PROFILE 21–30 – Scale: H: 1"=30', V: 10.00:1

NOTE: PROFILE SHOWS COMPLETED PHASE 2 CONDITION. PHASE 1 STOPS AT STRUCTURE 18. REFER TO SHEET C5.1 FOR PIPE 18A–18.

COMMONWEALTH OF VIRGINIA
JULIA WALLACE SKARE
Lic. No. 43893
5/10/13
PROFESSIONAL ENGINEER

Draper Aden Associates
Engineering • Surveying • Environmental Services
Charlottesville, VA
700 Harris Street, Suite E
Charlottesville, VA 22903
434-295-0700 Fax: 434-295-2105
www.dai.com
Blacksburg, VA
Richmond, VA
Hampton Roads, VA

STORM PROFILES - STRUCTURES 21-30

RAMBLEWOOD PARK IMPROVEMENTS

RAMBLEWOOD PARK, HARRISONBURG, VIRGINIA

REVISIONS

DESIGNED BY:	JWS
DRAWN BY:	ECB
CHECKED BY:	GWC
SCALE:	AS SHOWN
DATE:	MAY 10, 2013
PROJECT NUMBER:	06154-192CV

C6.2

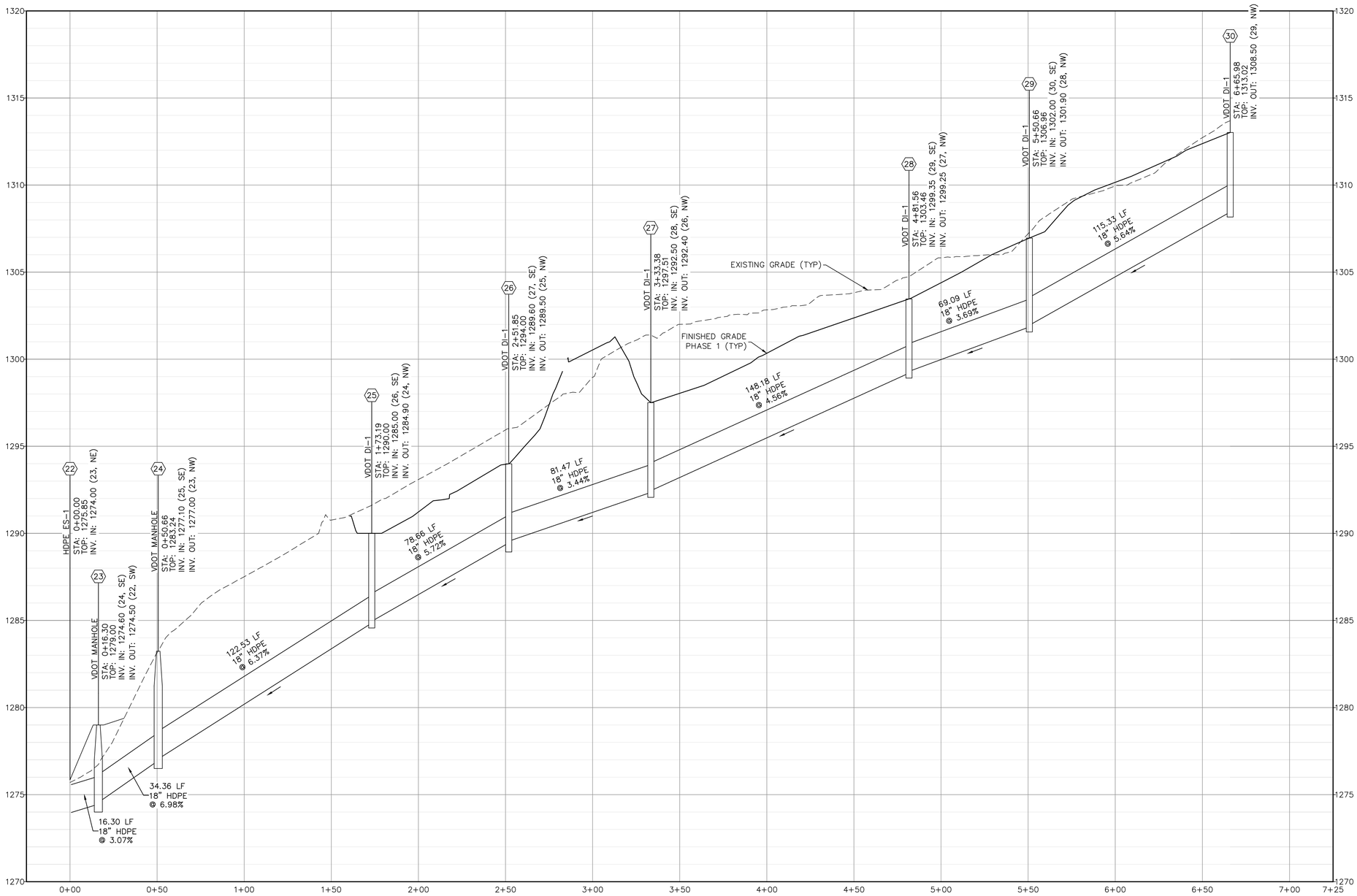

STORM PROFILE 31–39 – Scale: H: 1"=30', V: 10.00:1

COMMONWEALTH OF VIRGINIA
JULIA WALLACE SKARE
Lic. No. 43893
5/10/13
PROFESSIONAL ENGINEER

Draper Aden Associates
Engineering • Surveying • Environmental Services
Charlottesville, VA
705 Harris Street, Suite E
Charlottesville, VA 22903
434-295-0700 Fax: 434-295-2105
www.daa.com
Blacksburg, VA
Richmond, VA
Hampton Roads, VA

STORM PROFILES - STRUCTURES 30-39

RAMBLEWOOD PARK IMPROVEMENTS

RAMBLEWOOD PARK, HARRISONBURG, VIRGINIA

REVISIONS

DESIGNED BY:	JWS
DRAWN BY:	ECB
CHECKED BY:	GWC
SCALE:	AS SHOWN
DATE:	MAY 10, 2013
PROJECT NUMBER:	06154-192CV

C6.3

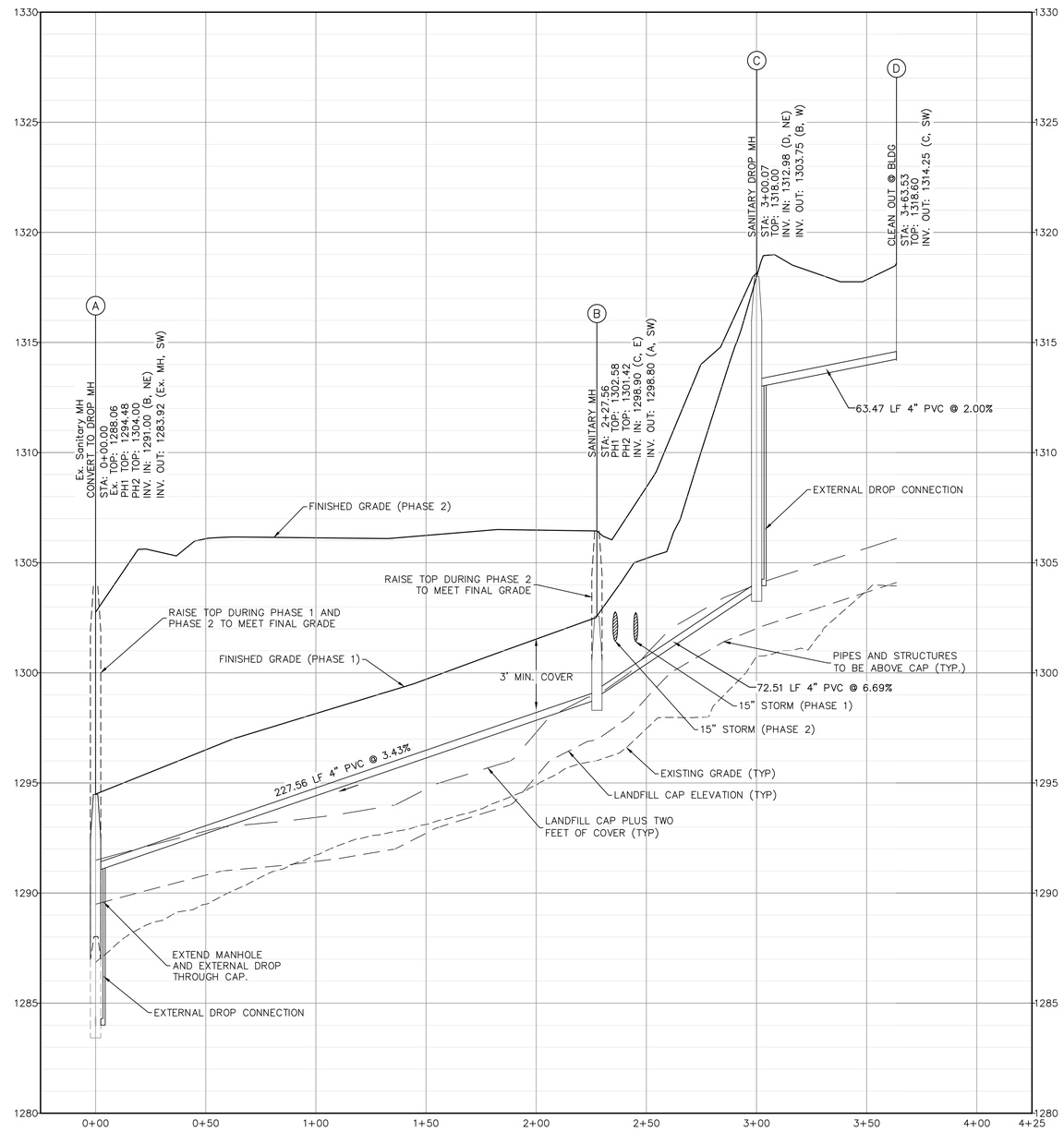

SANITARY SEWER PROFILE – Scale: H: 1"=30', V: 10.00:1

COMMONWEALTH OF VIRGINIA
JULIA WALLACE SKARE
Lic. No. 43893
5/10/13
PROFESSIONAL ENGINEER

Draper Aden Associates
Engineering • Surveying • Environmental Services
Charlottesville, VA
705 Hillsdale Street, Suite B
Charlottesville, VA 22903
434-295-0700 Fax: 434-295-2105
www.daa.com
Blacksburg, VA
Richmond, VA
Hampton Roads, VA

SANITARY SEWER PROFILE

RAMBLEWOOD PARK IMPROVEMENTS

RAMBLEWOOD PARK, HARRISONBURG, VIRGINIA

REVISIONS

DESIGNED BY:	JWS
DRAWN BY:	ECB
CHECKED BY:	GWC
SCALE:	AS SHOWN
DATE:	MAY 10, 2013
PROJECT NUMBER:	06154-192CV

C6.4

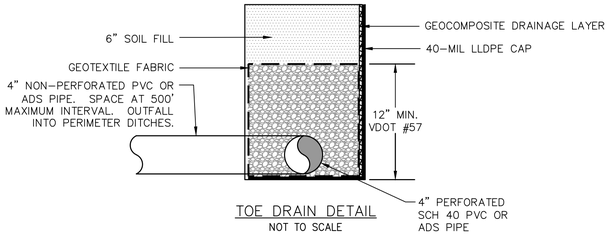

TOE DRAIN DETAIL
NOT TO SCALE

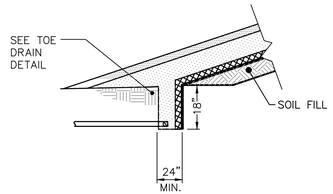

NOTES:

1. ALL MATERIALS SHALL BE PLACED IN ACCORDANCE WITH THE SPECIFICATIONS.

CAP TOE DRAIN DETAIL
NOT TO SCALE

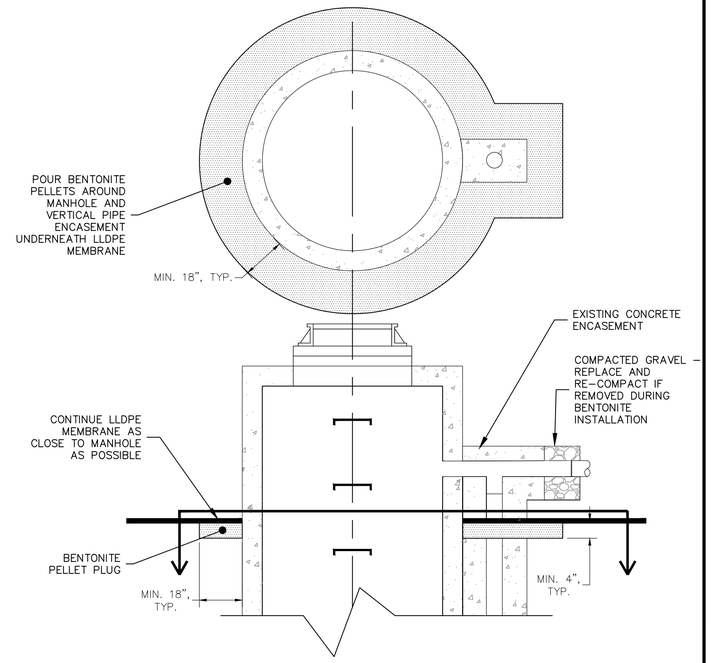

BENTONITE PLUG AT EXISTING MANHOLE AND ENCASEMENT
NOT TO SCALE

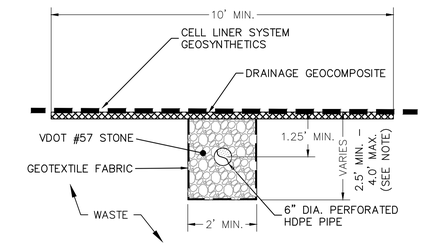

NOTE:
EXCAVATE TRENCH SUCH THAT EXISTING COVER IS BREACHED OR TO A MAXIMUM DEPTH OF 4 FEET.

LFG SURFACE COLLECTOR TRENCH CROSS SECTION
NOT TO SCALE

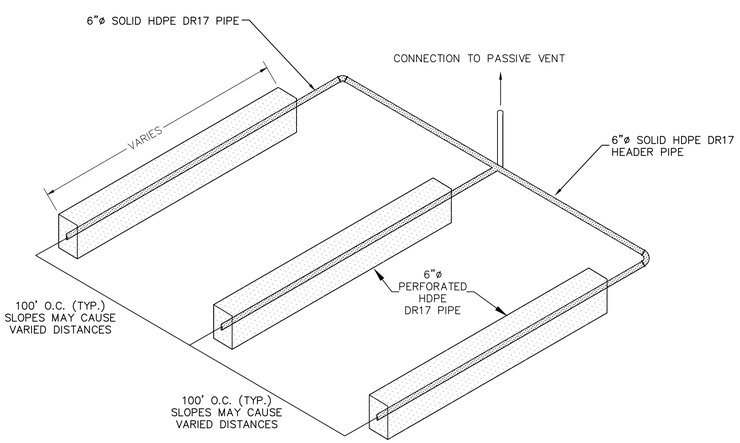

GAS COLLECTION NETWORK
NOT TO SCALE

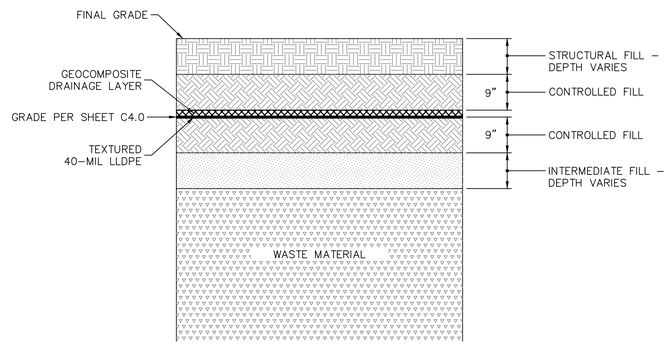

CAP DETAIL
NOT TO SCALE

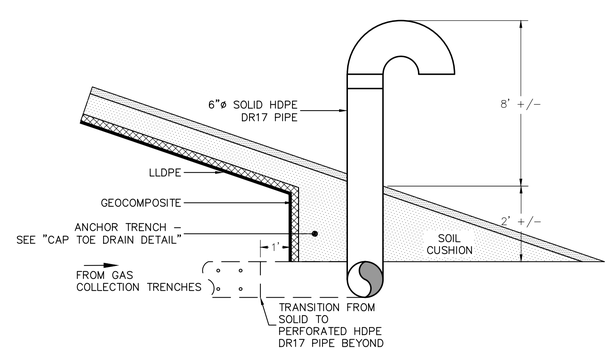

LANDFILL GAS VENT DETAIL
NOT TO SCALE

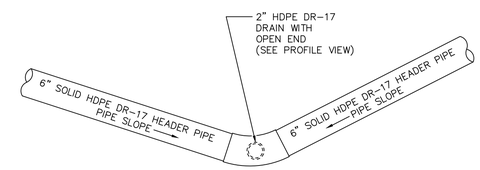

PLAN VIEW

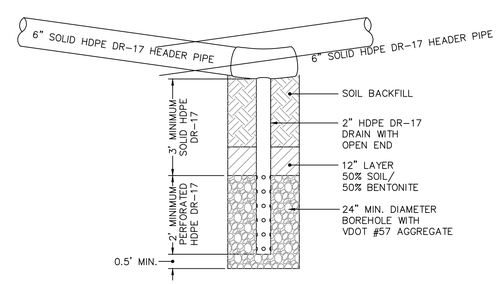

PROFILE VIEW

NOTE:
DRAIN TO BE INSTALLED IN LOCATIONS ON SHEET 3 AND AT LOW POINTS ALONG SOLID HEADER LINES.

LANDFILL GAS CONDENSATE DRAIN DETAIL
NOT TO SCALE

COMMONWEALTH OF VIRGINIA
WILLIAM G. HASE
Lic. No. 21807
5/10/13
PROFESSIONAL ENGINEER

Draper Aden Associates
Engineering • Surveying • Environmental Services
Charlottesville, VA
705 Norfolk Street, Suite B
Charlottesville, VA 22903
434-295-0700 Fax: 434-295-2105
www.das.com
Blacksburg, VA
Richmond, VA
Hampton Roads, VA

LANDFILL CAP DETAILS

RAMBLEWOOD PARK IMPROVEMENTS

RAMBLEWOOD PARK, HARRISONBURG, VIRGINIA

REVISIONS

DESIGNED BY:	WGH
DRAWN BY:	NTM
CHECKED BY:	WGH
SCALE:	NOT TO SCALE
DATE:	MAY 10, 2013
PROJECT NUMBER:	06154-192CV

C7.0

P:\06100\06154\06154-192CV\CAD\06154-192CV ZD\06154-192CV-DETAILS.DWG Layout: May 10, 2013 3:18:11 PM

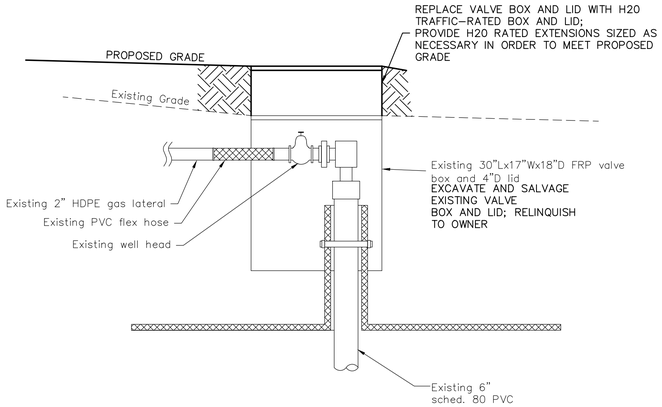

DETAIL 1
GAS WELL DETAIL WITH RAISED VALVE BOX ONLY

NOT TO SCALE

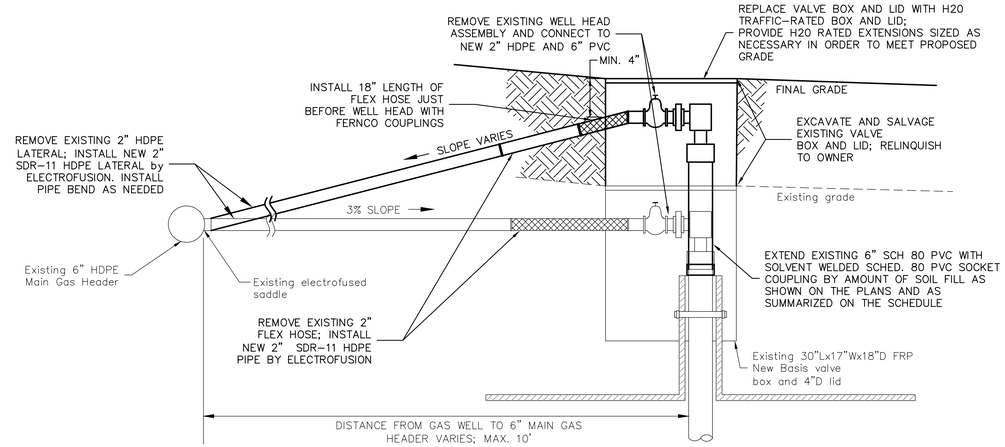

NOTE:

LATERALS SHALL SLOPE CONTINUOUSLY AT MIN. 3% SLOPE SO THAT WATER DRAINS EITHER TO THE MAIN GAS HEADER OR THE WELL HEAD.

DETAIL 2
GAS WELL DETAIL WITH RAISED WELL AND RAISED VALVE BOX

NOT TO SCALE

ID	EX. SURFACE ELEV.	PROPOSED SURFACE ELEV.	TRAFFIC RATED LID	DETAIL NO.
MW-R3	1304.2	1305.7	N/A	4
GP-1	1323.6	1323.0	Y	3
GP-16	1303.5	1304.2	N/A	4
EW-1	1297.9	1299.1	Y	2
EW-2	1300.0	1299.5	KEEP AS IS	
EW-3	1301.1	1301.1	KEEP AS IS	
EW-4	1302.3	1303.0	Y	2
EW-5	1303.6	1304.0	Y	1
EW-6	1303.7	1304.5	Y	2
EW-7	1303.7	1304.5	Y	2
EW-8	1303.8	1304.7	Y	2
EW-9	1305.3	1306.3	Y	2
EW-10	1307.0	1307.5	Y	1
EW-11	1309.2	1312.0	Y	2
EW-12	1311.5	1314.0	Y	2
EW-13	1313.5	1315.8	Y	2
EW-14	1315.9	1317.1	Y	2
EW-15	1317.9	1319.0	Y	2
EW-16	1322.2	1322.2	Y	N/A
EW-17	1323.2	1323.1	Y	N/A
EW-18	1323.3	1323.1	Y	N/A
EW-19	1223.7	1323.2	Y	5
EW-20	1323.9	1323.2	Y	5
EW-21	1324.2	1323.3	Y	5
EW-22	1324.4	1323.3	Y	5
EW-23	1322.8	1324.1	Y	2

NOTE:

EXISTING ELEVATIONS ARE NOT BASED ON SURVEY DATA. CONTRACTOR IS RESPONSIBLE FOR FIELD SURVEY OF EXISTING GROUND SURFACE WHERE NECESSARY.

WELL AND PROBE SCHEDULE

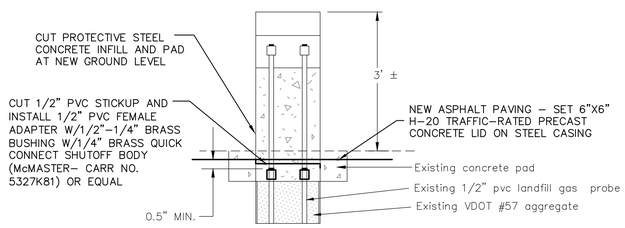

NOTE:

MATERIAL REMOVED SHALL BE SALVAGED AND RELINQUISHED TO CITY.

DETAIL 3
GAS PROBE DETAIL WITH LID

NOT TO SCALE

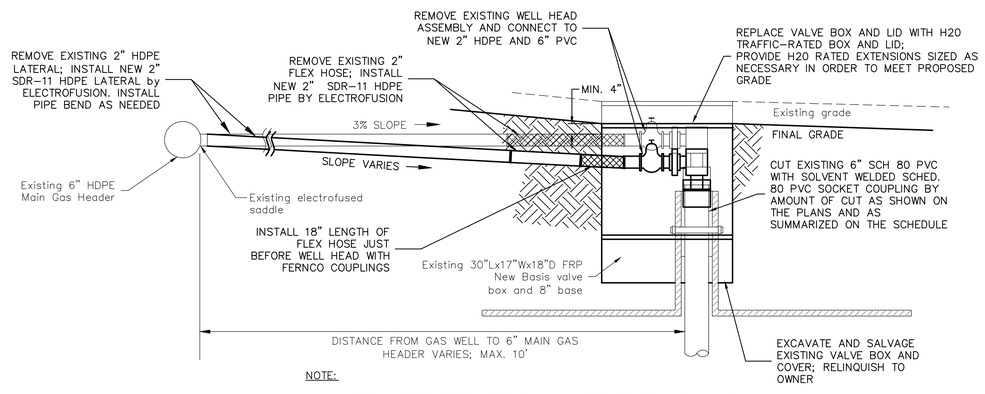

NOTE:

LATERALS SHALL SLOPE CONTINUOUSLY AT MIN. 3% SLOPE SO THAT WATER DRAINS EITHER TO THE MAIN GAS HEADER OR THE WELL HEAD.

DETAIL 5
GAS WELL DETAIL WITH LOWERED VALVE BOX

NOT TO SCALE

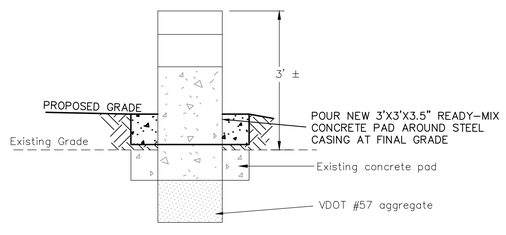

DETAIL 4
GAS PROBE AND MONITORING WELL DETAIL WITH CONCRETE PAD

NOT TO SCALE

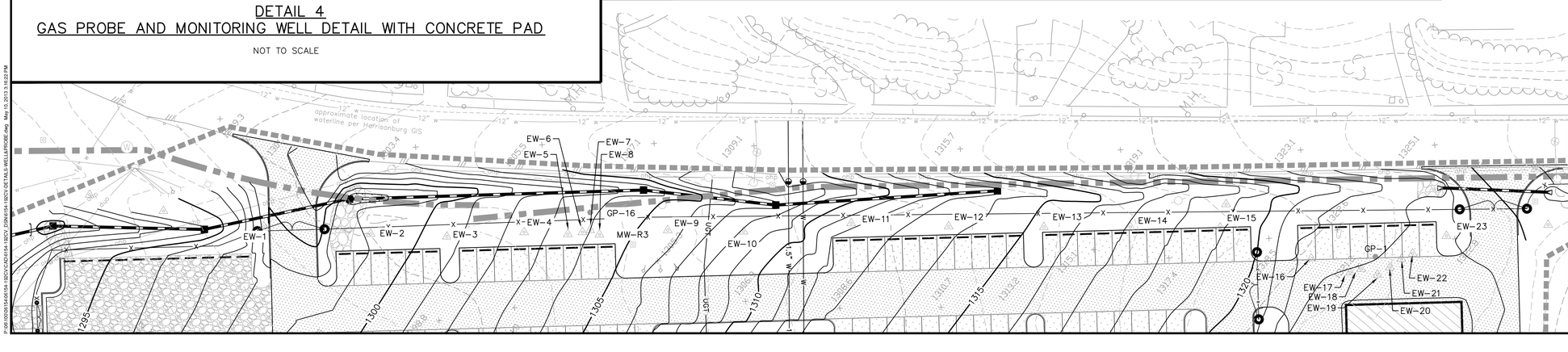

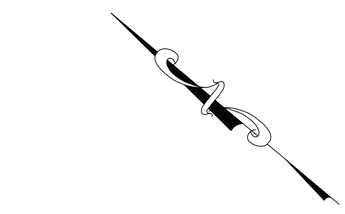

GRAPHIC SCALE

30 0 15 30 60 120

(IN FEET)
1 inch = 30 ft.

LEGEND

SEE SHEET C0.1 FOR FULL LEGEND

Proposed Final 5' Contour	1310
Proposed Final 1' Contour	1304
Existing 10' Contour	1290
Existing 2' Contour	
Existing Gas Probe	GP-1
Existing Gas Extraction Well	EW-1
Existing Monitoring Well	MW-1

COMMONWEALTH OF VIRGINIA
WILLIAM G. HASE
Lic. No. 21807
5/10/13
PROFESSIONAL ENGINEER

Draper Aden Associates
Engineering • Surveying • Environmental Services
Blacksburg, VA
Richmond, VA
Hampton Roads, VA
Charlottesville, VA
705 Harris Street, Suite B
Charlottesville, VA 22903
434-295-0700 Fax: 434-295-2105
www.daa.com

WELL AND PROBE IMPROVEMENT DETAILS

RAMBLEWOOD PARK IMPROVEMENTS

RAMBLEWOOD PARK, HARRISONBURG, VIRGINIA

REVISIONS

DESIGNED BY:	WGH
DRAWN BY:	NTM
CHECKED BY:	WGH
SCALE:	AS NOTED
DATE:	MAY 10, 2013
PROJECT NUMBER:	06154-192CV

C7.1

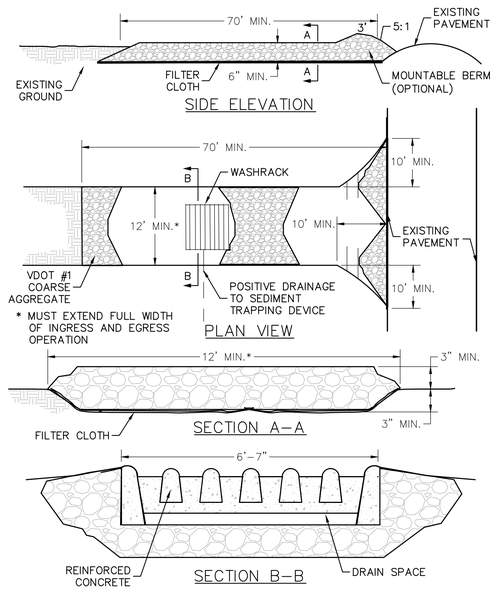

3.02 C2.1 C7.2 CONSTRUCTION ENTRANCE WITH WASHRACK
NOT TO SCALE

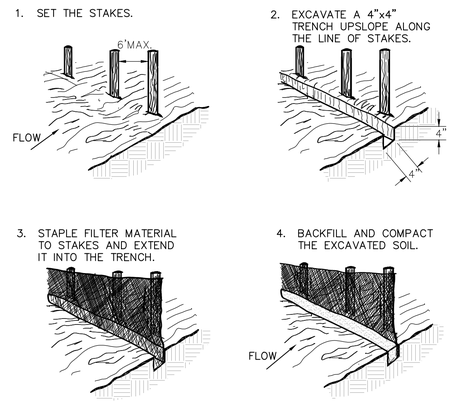

CONSTRUCTION OF A SILT FENCE

NOTES:
- WOODEN STAKES TO BE A MINIMUM OF 5' LONG AND HAVE A MINIMUM DIAMETER OF 2" WHEN OAK AND 4" WHEN PINE.
- SILT FENCE FABRIC SHALL MEET ALL REQUIREMENTS OF TABLE 3.05–B OF THE VIRGINIA EROSION AND SEDIMENT CONTROL HANDBOOK.
- SILT FENCE SHALL BE A MINIMUM OF 24" ABOVE THE GROUND AND SHALL NOT EXCEED 34" ABOVE GROUND.

3.05 C2.1 C7.2 SILT FENCE INSTALLATION DETAILS
NOT TO SCALE

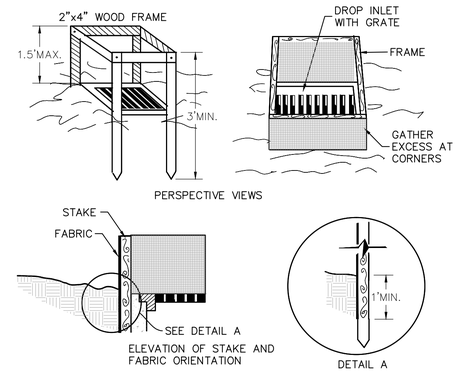

SPECIFIC APPLICATION

THIS METHOD OF INLET PROTECTION IS APPLICABLE WHERE THE INLET DRAINS A RELATIVELY FLAT AREA (SLOPE NO GREATER THAN 5%) WHERE THE INLET SHEET OR OVERLAND FLOWS (NOT EXCEEDING 1 C.F.S.) ARE TYPICAL. THE METHOD SHALL NOT APPLY TO INLETS RECEIVING CONCENTRATED FLOWS, SUCH AS IN STREET OR HIGHWAY MEDIANS.

3.07A C2.1 C7.2 SILT FENCE DROP INLET PROTECTION DETAIL
NOT TO SCALE

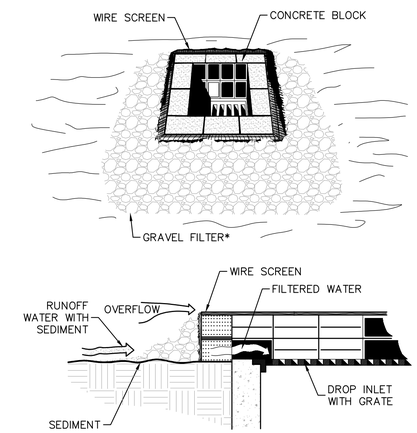

SPECIFIC APPLICATION

THIS METHOD OF INLET PROTECTION IS APPLICABLE WHERE HEAVY FLOWS ARE EXPECTED AND WHERE AN OVERFLOW CAPACITY IS NECESSARY TO PREVENT EXCESSIVE PONDING AROUND THE STRUCTURE.

* GRAVEL SHALL BE VDOT #3, #357 OR #5 COARSE AGGREGATE.

3.07B C2.1 C7.2 BLOCK AND GRAVEL DROP INLET SEDIMENT FILTER
NOT TO SCALE

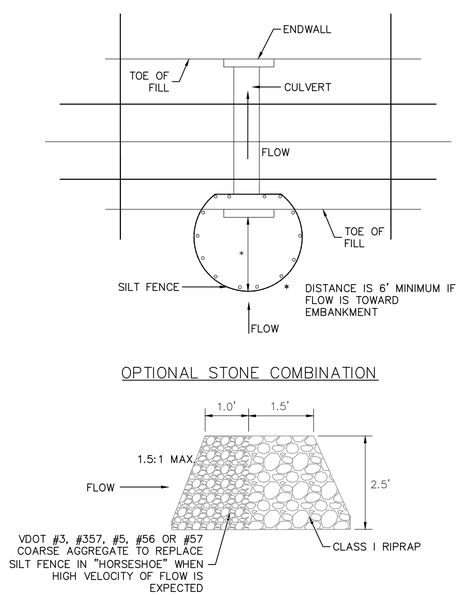

3.08 C2.1 C7.2 SILT FENCE CULVERT INLET PROTECTION
NOT TO SCALE

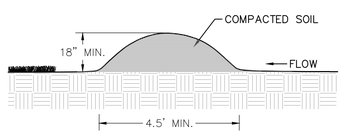

3.09 C2.0 C7.2 TEMPORARY DIVERSION DIKE
NOT TO SCALE

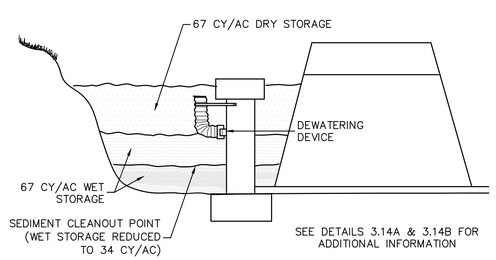

3.14 C2.2 C7.2 MINIMUM STORAGE VOLUME AND SEDIMENT STORAGE
NOT TO SCALE

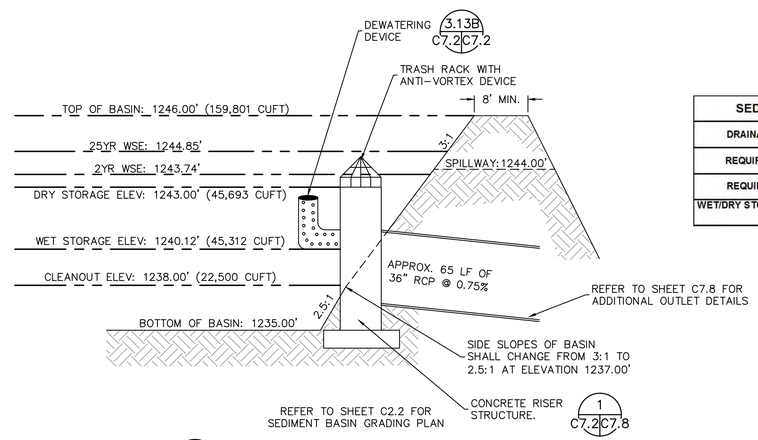

SEDIMENT BASIN	#1
DRAINAGE AREA (ACRES)	25.00
REQUIRED STORAGE (FT³)	90450
REQUIRED STORAGE (CY)	3350
WET/DRY STORAGE TARGET VOLUME (FT³)	45225.0

3.14A C2.2 C7.2 SEDIMENT BASIN SECTIONS
NOT TO SCALE

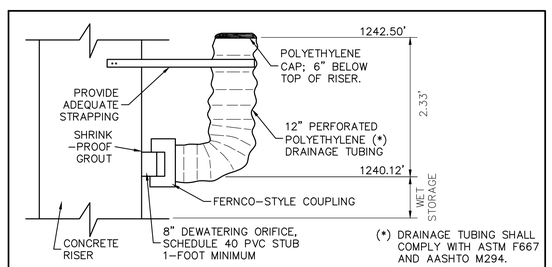

3.13B C7.2 C7.2 SEDIMENT BASIN DEWATERING DEVICE
NOT TO SCALE

COMMONWEALTH OF VIRGINIA
JULIA WALLACE SKARE
Lic. No. 43893
3/10/13
PROFESSIONAL ENGINEER

Draper Aden Associates
Engineering • Surveying • Environmental Services
Blacksburg, VA
Richmond, VA
Hampton Roads, VA
Charlottesville, VA
705 Harris Street, Suite E
Charlottesville, VA 22903
434-295-0700 Fax: 434-295-2105
www.dai.com

EROSION AND SEDIMENT CONTROL DETAILS
RAMBLEWOOD PARK IMPROVEMENTS
RAMBLEWOOD PARK, HARRISONBURG, VIRGINIA

REVISIONS

DESIGNED BY:	JWS
DRAWN BY:	ECB
CHECKED BY:	GWC
SCALE:	NO SCALE
DATE:	MAY 10, 2013
PROJECT NUMBER:	06154-192CV

C7.2

P:\06-192\06154-192\14-192CV\CADD\154-192CV_DRW\154-192CV DETAILS.dwg, May 10, 2013 3:16:32 PM

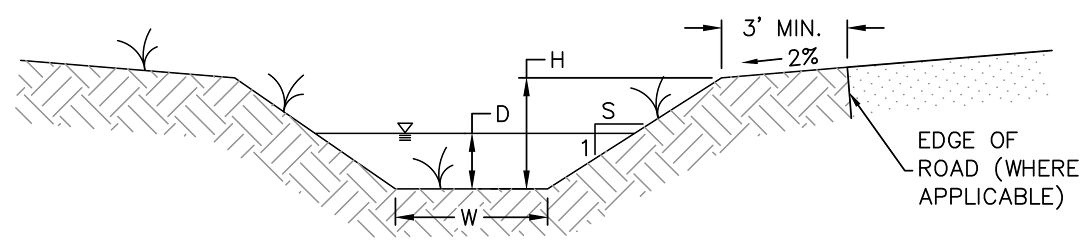

TYPICAL GRASS CHANNEL

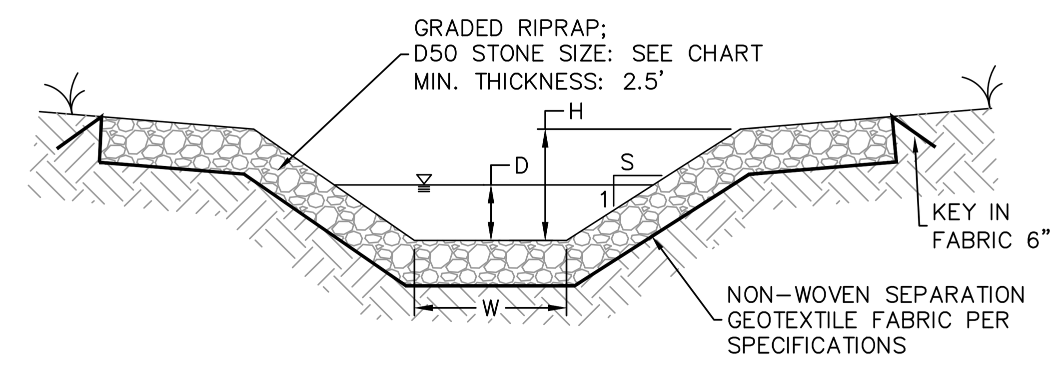

TYPICAL RIPRAP CHANNEL

* W=0' FOR TRIANGULAR SECTION

* NOTE: THESE ARE THE MINIMUM VALUES FOR THE CHANNEL SECTION. SOME AREAS WILL BE DEEPER AND THEREFORE WIDER AT THE TOP. REFER TO THE GRADING PLAN.

MATTING INSTALLED IN CHANNELS SHALL MEET THE MINIMUM VELOCITY AND SLOPE REQUIREMENTS NOTED IN THE CHART.

EXISTING CHANNELS: EXISTING CHANNELS SHALL BE INSPECTED TO VERIFY THEY MEET THE MINIMUM DIMENSIONS SHOWN IN THE TABLE. IF EXISTING CHANNELS DO MEET THE MINIMUM REQUIREMENTS, REGRADE CHANNEL AND RE–INSTALL SAME LINING MATERIAL.

REFER TO SHEETS C2.3 & C2.4 FOR CHANNEL SECTION LOCATIONS.

Section	Flow to Channel					
	Area (ac)	Imp. A (ac)	Sheet Flow (10 yr cfs)	Pipe (10 yr cfs)	Upstream Channel (10 yr cfs)	Total (10 yr cfs)
A	3.95	1.26	8.13	0.00	0.00	**8.13**
B	1.38	0.09	1.96	12.89	0.00	**14.85**
C	2.64	0.18	5.70	0.00	14.85	**20.55**
D/E	3.69	0.57	6.07	0.00	0.00	**6.07**
F	0.88	0.06	2.30	0.00	0.00	**2.30**
G	3.72	0.34	5.54	0.00	8.38	**13.91**
H/I/J	2.12	0.06	4.24	0.00	13.91	**18.16**
K	2.64	0.11	5.44	0.00	0.00	**5.44**
L	0.11	0.01	0.32	2.83	0.00	**3.15**
M (Ph2)	1.38	0.11	3.05	4.07	0.00	**7.12**
N (Ph2)	0.11	0.01	0.32	0.00	15.71	**16.03**
P1-1	0.85	0.06	1.83	1.77	0.00	**3.60**
P1-2	0.29	0.03	0.83	0.00	3.60	**4.43**
P1-3	2.98	0.11	6.09	2.71	0.00	**8.80**
M (Ph1)	0.92	0.00	1.74	0.00	8.80	**10.55**
N (Ph1)	0.11	0.01	0.32	0.00	19.14	**19.46**

Section	Channel Dimensions						
	S (ft)	W (ft)	H (ft)	Slope	D (ft)	Velocity (ft/sec)	Lining
A	3	3	1.0	2.0%	0.54	3.26	Grass
	3	3	1.0	6.5%	0.40	4.84	Grass
B	3	3	2.0	1.7%	0.77	3.63	Grass
C	3	3	2.0	3.3%	0.77	5.03	Grass
	3	3	2.0	6.7%	0.64	6.53	Grass
D	4	0	1.0	1.0%	0.81	2.31	Grass
E	4	0	1.0	33.0%	0.43	8.21	Matting
F	5	5	0.8	1.5%	0.22	1.71	Grass
G	5	5	1.5	1.1%	0.64	2.65	Grass
H	5	0	1.5	25.0%	0.62	9.45	Rip Rap
I (Ex.)	5	3	1.0	20.0%	0.43	8.20	Rip Rap
J (Ex.)	5	3	1.0	5.0%	0.60	5.04	Grass
K (Ex.)	3	1	1.0	5.0%	0.50	4.35	Grass
L (Ex.)	5	3	1.0	15.0%	0.18	4.49	Rip Rap
M (Ex.)	3	1	1.0	6.7%	0.64	5.65	Grass
N (Ex.)	5	3	1.0	15.0%	0.48	7.51	Rip Rap
P1-1	3	0	3.0	25.0%	0.41	7.14	Matting
P1-2	3	0	1.0	33.0%	0.43	7.99	Rip Rap
P1-3	3	2	1.0	4.0%	0.55	4.38	Grass

3.17 C2.0 | C7.3 TYPICAL STORMWATER CHANNEL CROSS–SECTIONS
NOT TO SCALE

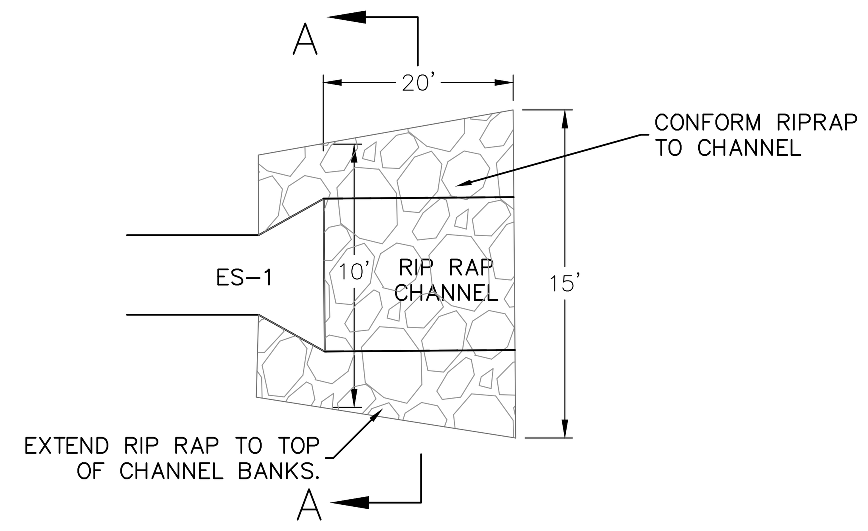

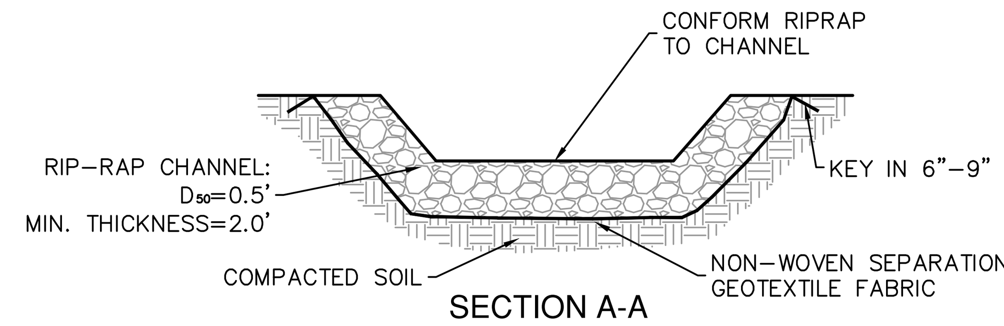

SECTION A-A

RIPRAP TO REMAIN IN PLACE PERMANENTLY

NOTE: SIMILAR SECTION AND PLAN FOR ALL END SECTIONS. FIT RIP RAP TO CHANNELS UP TO TOP OF DITCH SIDE SLOPES FOR 20' DOWNSTREAM OF ES–1.

3.18 C2.1 | C7.3 RIP RAP OUTLET PROTECT DETAIL
NOT TO SCALE

L = THE DISTANCE SUCH THAT POINTS A AND B ARE OF EQUAL ELEVATION

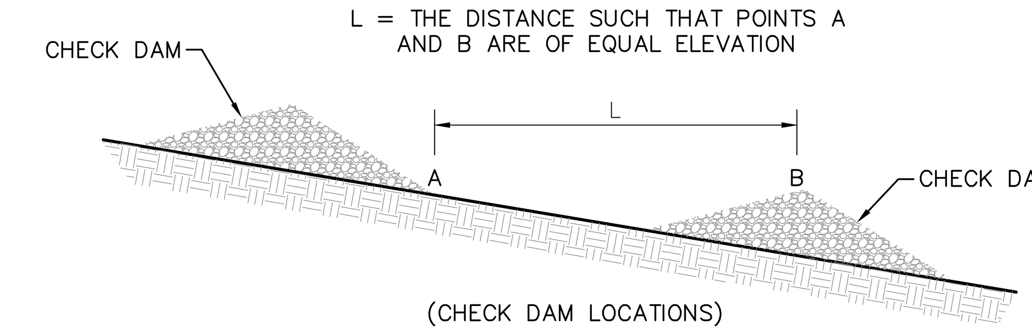

(CHECK DAM LOCATIONS)

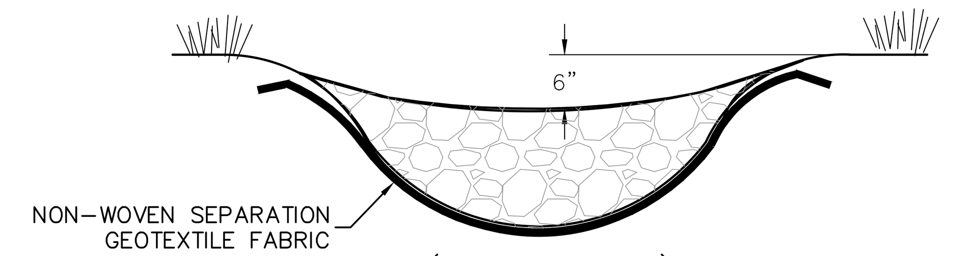

(DOWNSTREAM VIEW)

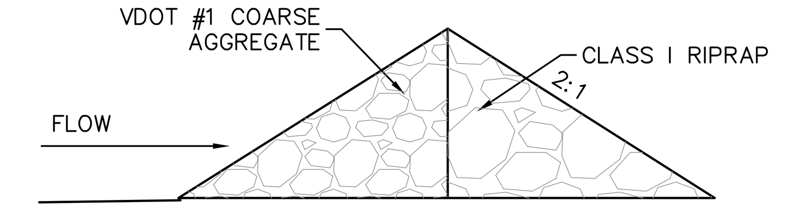

3.20 C2.0 | C7.3 ROCK CHECK DAM DETAIL
NOT TO SCALE

NOTES:
1. RETAIN A COPY OF THE VIRGINIA EROSION AND SEDIMENT CONTROL HANDBOOK, LATEST EDITION ON SITE AT ALL TIMES.
2. ADHERE TO THE STANDARDS LISTED IN THE VIRGINIA EROSION AND SEDIMENT CONTROL HANDBOOK, LATEST EDITION.
3. VIRGINIA STORMWATER MANAGEMENT PROGRAM (VSMP) PERMIT WILL BE REQUIRED FOR THIS PROJECT. REGISTRATION TO DCR FOR THE PERMIT WILL BE REQUIRED PRIOR TO ANY LAND DISTURBING ACTIVITY.
4. PRIOR TO ANY LAND DISTURBING ACTIVITY, CONTRACTOR SHALL PROVIDE THE NAME, CERTIFICATION INFORMATION, AND CONTACT INFORMATION OF THE DESIGNATED RESPONSIBLE LAND DISTURBER (RLD) TO DCR.
5. REFER TO EROSION AND SEDIMENT CONTROL NARRATIVE ON SHEET C0.1 FOR MAINTENANCE, SEQUENCE OF CONSTRUCTION, AND ADDITIONAL EROSION AND SEDIMENT CONTROL NOTES.

TEMPORARY SEEDING (TS)

TABLE 3.31–B ACCEPTABLE TEMPORARY SEEDING PLANT MATERIALS
"QUICK REFERENCE FOR ALL REGIONS"

PLANTING DATES	SPECIES	RATE (LBS./ACRE)
SEPT. 1–FEB. 15	50/50 MIX OF ANNUAL RYEGRASS (LOLIUM MULTI–FLORUM) & CEREAL (WINTER) RYE (SECALE CEREALE)	50–100
FEB. 16–APR. 30	ANNUAL RYEGRASS (LOLIUM MULTI–FLORUM)	60–100
MAY 1–AUG. 31	GERMAN MILLET (SETARIA ITALICA)	50–100

3.31 C2.1 | C7.3 TEMPORARY SEEDING
NOT TO SCALE

FINAL SEEDING SHALL MEET THE FOLLOWING REQUIREMENTS:

BALL FIELDS;
90/10 BLEND OF TALL FESCUE AND HYBRID BLUEGRASS; SOUTHERN LAWN EXTREME MIX (OR APPROVED EQUAL) TO BE USE AT 6 POUNDS PER 1,000 SF ON BEAR GROUND.

STARTER FERTILIZER 15–30–15 AT 150 POUNDS PER ACRE AND LIME PER SOIL SAMPLE, NO MORE THAN 50 POUNDS PER 1,000 SF IN ONE APPLICATION.

COMMON AREAS;
50/50 BLEND USING TALL FESCUE (K–31) AND A HARD FESCUE (AURORA GOLD) OR EQUAL. 200 POUNDS PER ACRE.

FERTILIZER 15–30–15 AT 150 POUNDS PER ACRE AND LIME BASED ON SOIL SAMPLE, NO MORE THAN 50 POUNDS PER 1,000 SF IN ONE APPLICATION.

STEEP SLOPES (OVER 4:1);
EROSION CONTROL BLEND OF THE FOLLOWING; 42% TALL FESCUE, 35% HARD FESCUE, 2% WHITE CLOVER, 20% ANNUAL RYE, 1 % RED TOP. 200 POUNDS PER ACRE.

FERTILIZER 15–30–15 AT 150 POUNDS PER ACRE AND LIME BASED ON SOIL SAMPLE, NO MORE THAN 50 POUNDS PER 1,000 SF PER APPLICATION.

TOP SOIL
TOP SOIL SHALL MEET THE SPECIFICATION 3.30 OF THE EROSION AND SEDIMENT CONTROL HANDBOOK. A MINIMUM OF 6" SHALL BE APPLIED TO ALL BALL FIELD AREAS AND A MINIMUM OF 2" TO ALL OTHER DISTURBED AREAS.

PERMANENT SEEDING (PS)

TABLE 3.32–C SITE SPECIFIC SEEDING MIXTURES FOR APPALACHIAN/MOUNTAIN AREA

	TOTAL LBS. PER ACRE
MINIMUM CARE LAWN	
–COMMERCIAL OR RESIDENTIAL	200–250 LBS.
–KENTUCKY 31 OR TURF–TYPE TALL FESCUE	90–100%
–IMPROVED PERENNIAL RYEGRASS *	0–10%
–KENTUCKY BLUEGRASS	0–10%
HIGH–MAINTENANCE LAWN	
MINIMUM OF THREE (3) UP TO FIVE (5) VARIETIES OF BLUEGRASS FROM APPROVED LIST FOR USE IN VIRGINIA	125 LBS.
GENERAL SLOPE (3:1 OR LESS)	
–KENTUCKY 31 FESCUE	128 LBS.
–RED TOP GRASS	2 LBS.
–SEASONAL NURSE CROP **	20 LBS.
	150 LBS.
LOW–MAINTENANCE SLOPE (STEEPER THAN 3:1)	
–KENTUCKY 31 FESCUE	108 LBS.
–RED TOP GRASS	2 LBS.
–SEASONAL NURSE CROP	20 LBS.
–CROWNVETCH	20 LBS.
	150 LBS.

* PERENNIAL RYEGRASS WILL GERMINATE FASTER AND AT LOWER SOIL TEMPERATURES THAN FESCUE, THEREBY PROVIDING COVER AND EROSION RESISTANCE FOR SEEDBED.

** USE SEASONAL NURSE CROP IN ACCORDANCE WITH SEEDING DATES AS STATED BELOW:

MARCH, APRIL THROUGH MAY 15TH	ANNUAL RYE
MAY 16TH THROUGH AUGUST 15TH	FOXTAIL MILLET
AUGUST 16TH THROUGH SEPTEMBER, OCTOBER	ANNUAL RYE
NOVEMBER THROUGH FEBRUARY	WINTER RYE

*** IF FLATPEA IS USED, INCREASE TO 30 LBS./ACRE. ALL LEGUME SEED MUST BE PROPERLY INOCULATED. WEEPING LOVEGRASS MAY ALSO BE INCLUDED IN ANY SLOPE OR LOW–MAINTENANCE MIXTURE DURING WARMER SEEDING PERIODS; ADD 10–20 LBS./ACRE IN MIXES.

FINAL SEEDING SHALL MEET THE REQUIREMENTS TO THE LEFT. PERMANENT SEEDING MIX SHOWN ABOVE SHALL BE USED FOR E&S APPLICATIONS.

3.32 C2.1 | C7.3 PERMANENT SEEDING (PIEDMONT VIRGINIA)
NOT TO SCALE

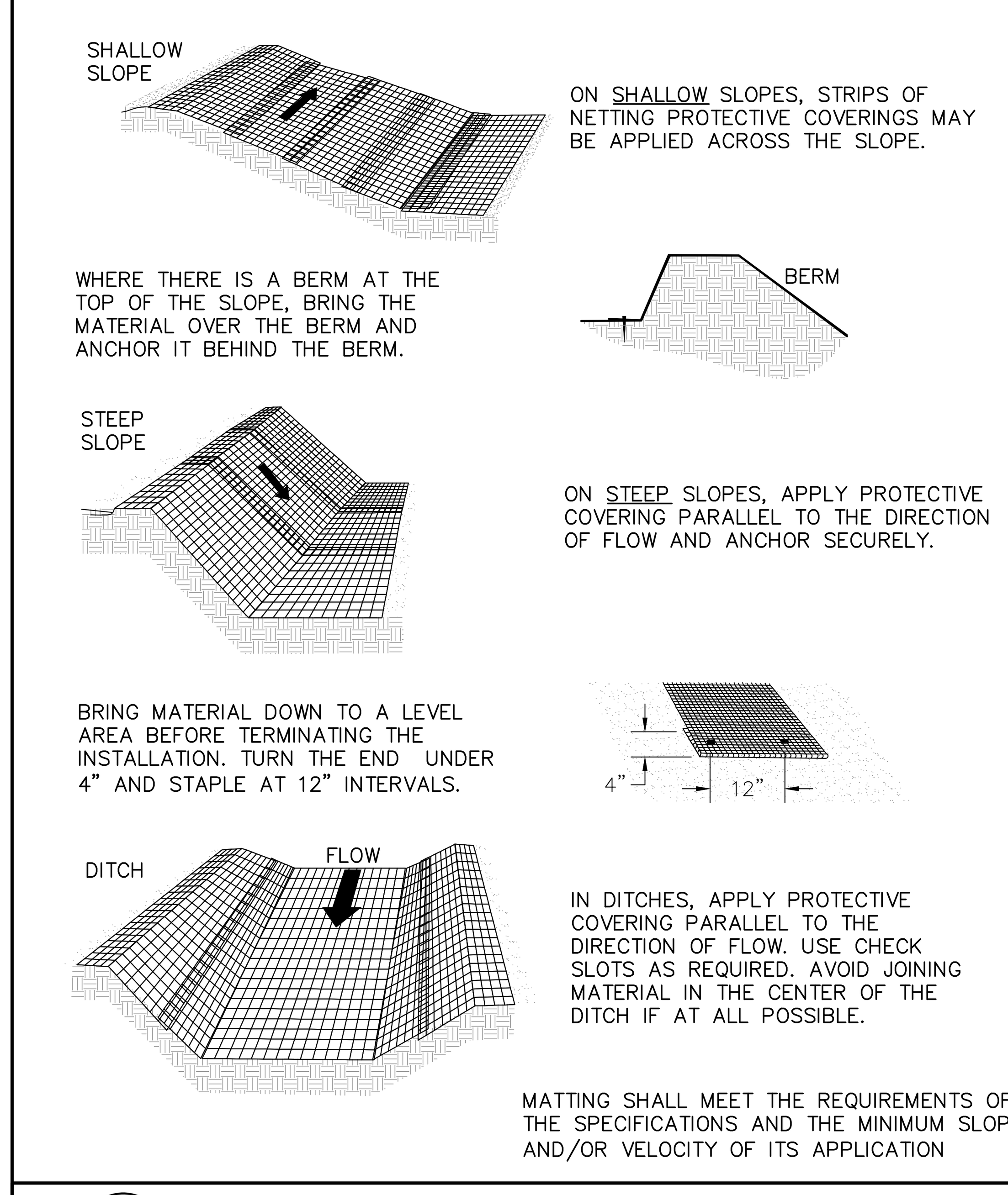

MATTING SHALL MEET THE REQUIREMENTS OF THE SPECIFICATIONS AND THE MINIMUM SLOPE AND/OR VELOCITY OF ITS APPLICATION

3.36 C2.1 | C7.3 SOIL STABILIZATION BLANKET
NOT TO SCALE

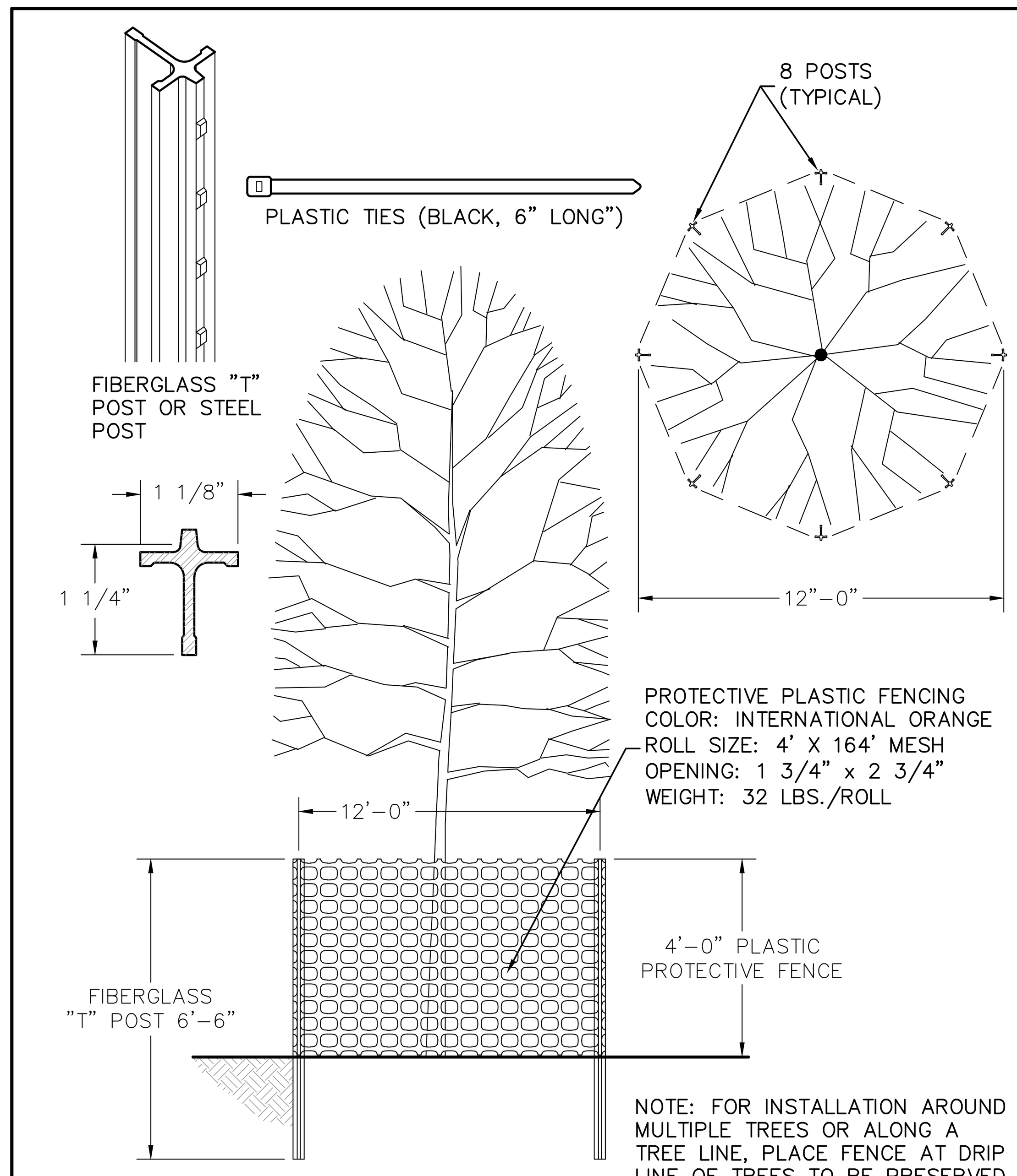

NOTE: FOR INSTALLATION AROUND MULTIPLE TREES OR ALONG A TREE LINE, PLACE FENCE AT DRIP LINE OF TREES TO BE PRESERVED.

3.38 C2.0 | C7.3 TREE PROTECTION DETAIL
NOT TO SCALE

COMMONWEALTH OF VIRGINIA
JULIA WALLACE SKARE
Lic. No. 43893
5/10/13
PROFESSIONAL ENGINEER

Draper Aden Associates
Engineering • Surveying • Environmental Services
Charlottesville, VA
700 Harris Street, Suite E
Charlottesville, VA 22903
434-295-0700 Fax: 434-295-2105
www.daa.com
Blacksburg, VA
Richmond, VA
Hampton Roads, VA

EROSION AND SEDIMENT CONTROL DETAILS
RAMBLEWOOD PARK IMPROVEMENTS
RAMBLEWOOD PARK, HARRISONBURG, VIRGINIA

REVISIONS

DESIGNED BY: JWS
DRAWN BY: ECB
CHECKED BY: GWC
SCALE: NO SCALE
DATE: MAY 10, 2013
PROJECT NUMBER: 06154-192CV

C7.3

P:\06100\06154\06154-192CV\CAD\6154-192CV_DSN\6154-192CV-DETAILS.dwg May 10, 2013 3:16:41 PM

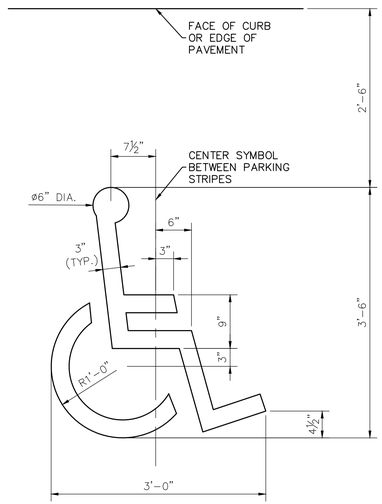

NOTES:
- MARKINGS SHALL BE WHITE THERMOPLASTIC.
- ADJACENT SPACE SHALL BE STRIPED WITH 4" WIDE STRIPES AT A 45° ANGLE SPACED 1' APART.

1 / C3.1 C7.4 TYPICAL HANDICAPPED PARKING SYMBOL DETAIL
NOT TO SCALE

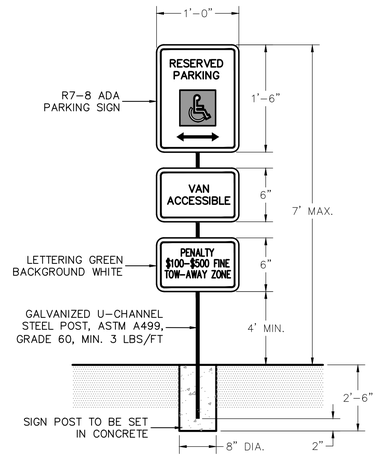

2 / C3.1 C7.4 HANDICAPPED ACCESSIBLE SIGN
NOT TO SCALE

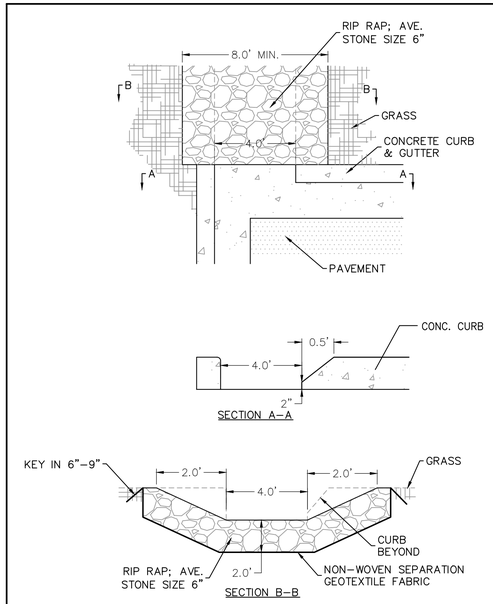

3 / C3.1 C7.4 CURB CUTS AND STONE CHANNELS
NOT TO SCALE

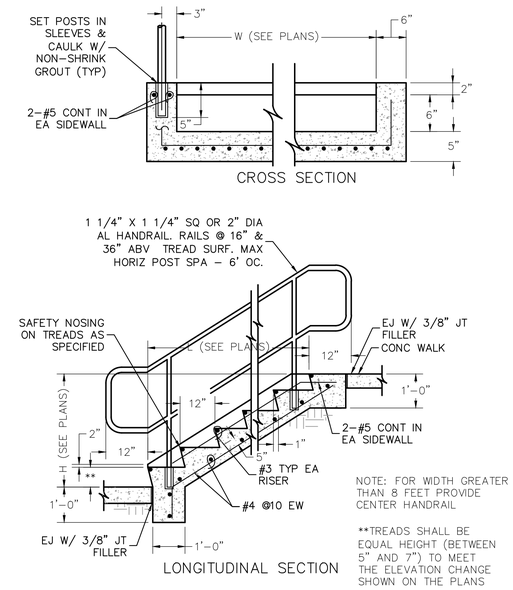

NOTE: FOR WIDTH GREATER THAN 8 FEET PROVIDE CENTER HANDRAIL

**TREADS SHALL BE EQUAL HEIGHT (BETWEEN 5" AND 7") TO MEET THE ELEVATION CHANGE SHOWN ON THE PLANS

4 / C3.1 C7.4 CONCRETE STAIRS
NOT TO SCALE

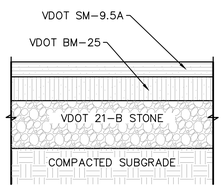

PAVEMENT SECTIONS

	LIGHT DUTY	HEAVY DUTY
SM-9.5A	2"	2"
BM-25	3"	3"
21-B STONE	6"	8"

5 / C3.1 C7.4 ASPHALT PAVEMENT SECTIONS
NOT TO SCALE

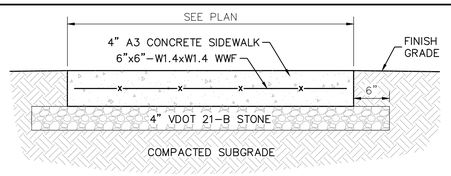

NOTES:
1. TRANSVERSE EXPANSION JOINTS SHALL BE PLACED AT 30'–0" o.c. (MAX.) AND BETWEEN THE BACK OF CURB AND SIDEWALK.
2. TRANSVERSE CONTROL JOINTS SHALL BE PLACED AT 5'–0" o.c. BETWEEN EXPANSION JOINTS.

6 / C3.1 C7.4 TYPICAL SIDEWALK DETAIL
NOT TO SCALE

NYLOPLAST INLINE DRAIN

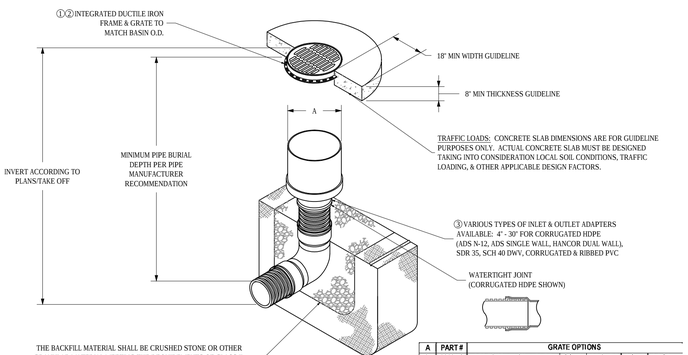

A	PART #	GRATE OPTIONS				
8"	2808AG	PEDESTRIAN/STANDARD	SOLID	BRONZE	DOME	DROP IN
10"	2810AG	PEDESTRIAN/STANDARD	SOLID	BRONZE	DOME	DROP IN
12"	2812AG	PEDESTRIAN	STANDARD	SOLID	BRONZE	DOME	DROP IN
15"	2815AG	PEDESTRIAN	STANDARD	SOLID	BRONZE	DOME	DROP IN
18"	2818AG	PEDESTRIAN	STANDARD	SOLID	N/A	DOME	DROP IN
24"	2824AG	PEDESTRIAN	STANDARD	SOLID	N/A	DOME	DROP IN
30"	2830AG	PEDESTRIAN	STANDARD	SOLID	N/A	DOME	N/A

①- 8" - 30" GRATES/SOLID COVERS SHALL BE DUCTILE IRON PER ASTM A536 GRADE 70-50-05, WITH THE EXCEPTION OF THE 8" - 15" BRONZE GRATES
②- 12" - 30" FRAMES SHALL BE DUCTILE IRON PER ASTM A536 GRADE 70-50-05
③- DRAINAGE CONNECTION STUB JOINT TIGHTNESS SHALL CONFORM TO ASTM D3212 FOR CORRUGATED HDPE (ADS & HANCOR DUAL WALL) & SDR 35 PVC
4 - GRATES SHALL MEET H-10 LOAD RATING FOR 12" - 24" PED
5 - GRATES SHALL MEET H-20 LOAD RATING FOR 30" PED & 12" - 30" STD & SOLID
6 - ALL BRONZE GRATES, DROP IN GRATES, & 8" & 10" PED/STD GRATES & SOLID COVERS ARE RATED FOR LIGHT DUTY APPLICATIONS ONLY
7 - DOME GRATES HAVE NO LOAD RATING

DRAWN BY	EBC	MATERIAL		Nyloplast	3130 VERONA AVE BUFORD, GA 30518 PHN (770) 932-2443 FAX (770) 932-2490 www.nyloplast-us.com
DATE	1-23-06				
APPD BY	CJA	PROJECT NO./NAME		TITLE	INLINE DRAIN WITH STANDARD GRATE QUICK SPEC INSTALLATION DETAIL
DATE	1-23-06				
DWG SIZE	A	SCALE 1:40	SHEET 1 OF 1	DWG NO.	7003-110-022 REV D

NOTES:
- NYLOPLAST OR APPROVED EQUAL.
- THIS DETAIL IS TO BE USED FOR REFERENCE ON ALL SIZED INLINE DRAINS. SEE STORM SCHEDULE FOR SIZE AND GRATE TYPE FOR EACH STRUCTURE.
- NO CONCRETE COLLAR REQUIRED.
- ALL SUMPS SHALL BE FILLED WITH NYLOPLAST PLUG OR CONCRETE TO THE INVERT OUT.

7 / C6.0 C7.4 NYLOPLAST INLINE DRAIN INSTALLATION DETAIL
NOT TO SCALE

THE CITY OF HARRISONBURG, VIRGINIA

DESIGN AND CONSTRUCTION STANDARD

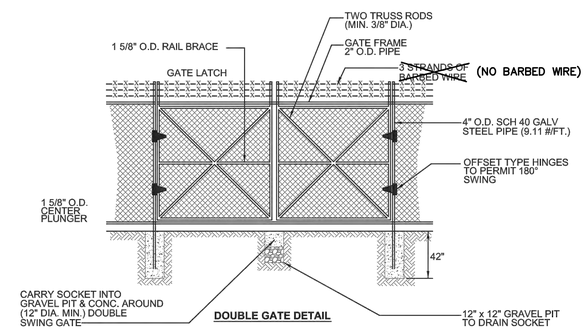

DOUBLE GATE DETAIL

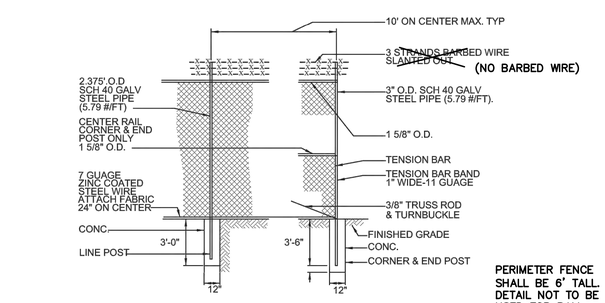

FENCE DETAIL

AS DESIGNATED BY DIRECTOR FOR SECURITY OF UTILITY INSTALLATIONS.

PERIMETER FENCE SHALL BE 6' TALL. DETAIL NOT TO BE USED FOR BALL FIELD FENCES.

NOT TO SCALE

REVISIONS			
NO.	DATE	DESCRIPTION	INIT.
1.	7/01/04	2004 D&CSM UPDATE	SDC

CHAIN LINK FENCE

DWG. NO. 47

PAGE 61

47 / C3.1 C7.4 CHAIN LINK FENCE DETAIL
NOT TO SCALE

COMMONWEALTH OF VIRGINIA
JULIA WALLACE SKARE
Lic. No. 43893
3/10/13
PROFESSIONAL ENGINEER

Draper Aden Associates
Engineering • Surveying • Environmental Services
Blacksburg, VA
Richmond, VA
Hampton Roads, VA
Charlottesville, VA
705 Harris Street, Suite 1E
Charlottesville, VA 22903
434-295-0700 Fax: 434-295-2105
www.daa.com

CONSTRUCTION DETAILS

RAMBLEWOOD PARK IMPROVEMENTS

RAMBLEWOOD PARK, HARRISONBURG, VIRGINIA

REVISIONS

DESIGNED BY: JWS
DRAWN BY: ECB
CHECKED BY: GWC
SCALE: NO SCALE
DATE: MAY 10, 2013
PROJECT NUMBER: 06154-192CV

C7.4

D:\06154\06154-192CV\CAD\06154-192CV_C06154-192CV_DETAILS.dwg May 10, 2013 3:15:02 PM

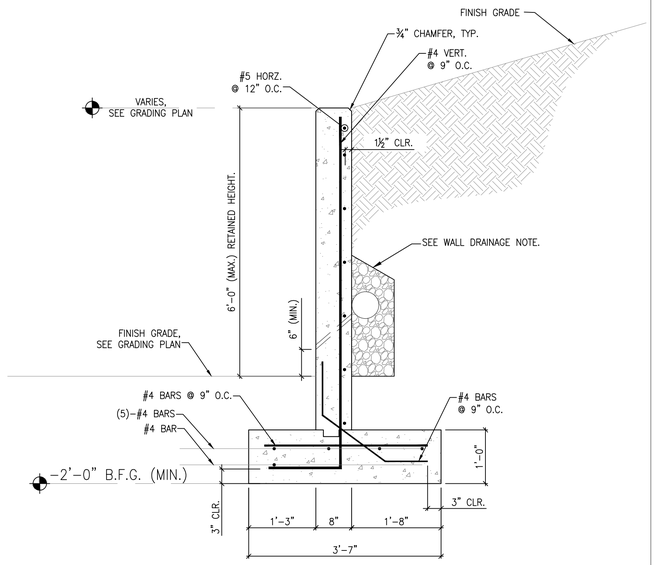

WALL DRAINAGE NOTE:

PROVIDE CONTINUOUS 6"ø PERFORATED COLLECTOR PIPE BEHIND ALL CANTILEVER WALLS. WRAP PERFORATED PIPE WITH VDOT NO. 57 STONE AND GEOTEXTILE FABRIC. PROVIDE 1"ø WEEPS SPACED AT 8'-0" O.C. (MAX.) THROUGH WALL, TYPICAL.

1 C3.1 C7.5 WALL SECTION AT HANDICAPPED RAMPS (OVER 2.0')
NOT TO SCALE

NOTES:

1. TRANSVERSE EXPANSION JOINTS ARE TO BE PLACED A MAXIMUM OF 30' ON CENTER.
2. TRANSVERSE CONTROL JOINTS ARE TO BE PLACED AT 5' ON CENTER BETWEEN EXPANSION JOINTS.
3. SPACE REBAR 2½" APART ALONG CENTER LINE OF SIDE WALL TO ALLOW CORING OF VERTICAL POST HOLES.

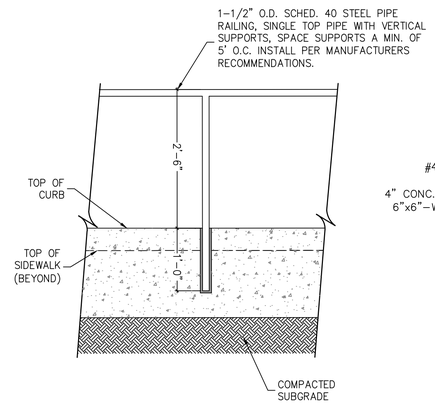

SECTION B-B
NOT TO SCALE

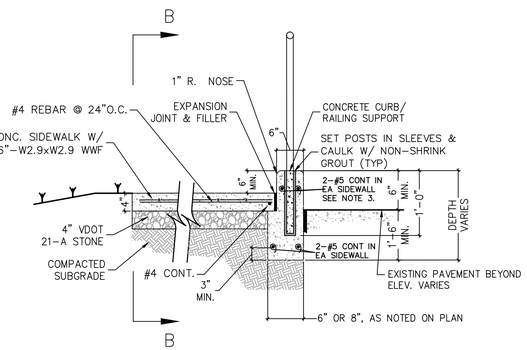

SECTION A-A
NOT TO SCALE

2 C3.1 C7.5 WALL SECTION AT HANDICAPPED RAMPS (UNDER 2.0')
NOT TO SCALE

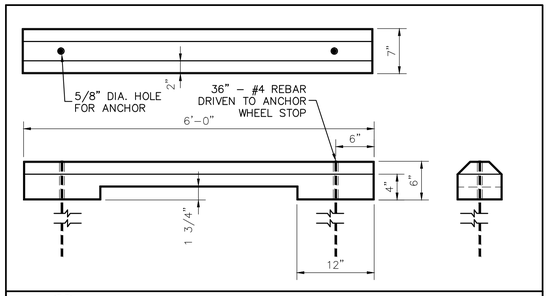

3 C3.1 C7.5 PRECAST CONCRETE WHEEL STOP DETAIL
NOT TO SCALE

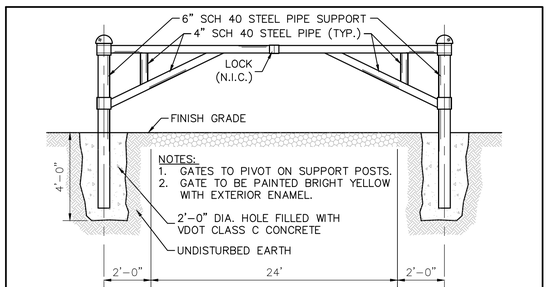

4 C3.1 C7.5 PIPE GATE DETAIL
NOT TO SCALE

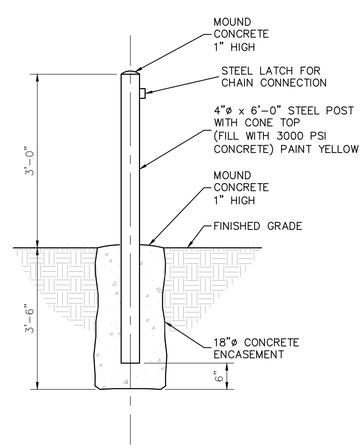

5 C3.1 C7.5 CONCRETE BOLLARD DETAIL
NOT TO SCALE

REFER TO THE FOLLOWING VDOT DETAILS FOR ITEMS NOT DETAILED ON THE PLANS.

VDOT STANDARD DETAILS

PAGE	STANDARD	
201.01	CG-2	V1 C3.1 C7.5
201.03	CG-6	V2 C3.1 C7.5
201.04	CG-7	V3 C3.1 C7.5
203.05	CG-12	V4 C3.1 C7.5
102.01	ES-1	V5 C6.0 C7.5
103.02, 103.09-103.11	T-MH-2; R-1,2,3; B-1,2	V6 C6.0 C7.5
106.07	MH-2	V7 C6.0 C7.5
106.08	IS-1	V8 C6.0 C7.5
107.01	PB-1	V9 C6.0 C7.5
601.07	SP-1	V10 C3.1 C7.5

COMMONWEALTH OF VIRGINIA
Julia W. Skare
JULIA WALLACE SKARE
Lic. No. 43893
5/10/13
PROFESSIONAL ENGINEER

Draper Aden Associates
Engineering • Surveying • Environmental Services
Blacksburg, VA
Richmond, VA
Hampton Roads, VA
Charlottesville, VA
700 Harris Street, Suite E
Charlottesville, VA 22903
434-295-0700 Fax: 434-295-2105
www.daa.com

CONSTRUCTION DETAILS
RAMBLEWOOD PARK IMPROVEMENTS
RAMBLEWOOD PARK, HARRISONBURG, VIRGINIA

REVISIONS

DESIGNED BY: JWS
DRAWN BY: ECB
CHECKED BY: GWC
SCALE: NO SCALE
DATE: MAY 10, 2013
PROJECT NUMBER: 06154-192CV

C7.5

The City of Harrisonburg, Virginia — DESIGN AND CONSTRUCTION STANDARD

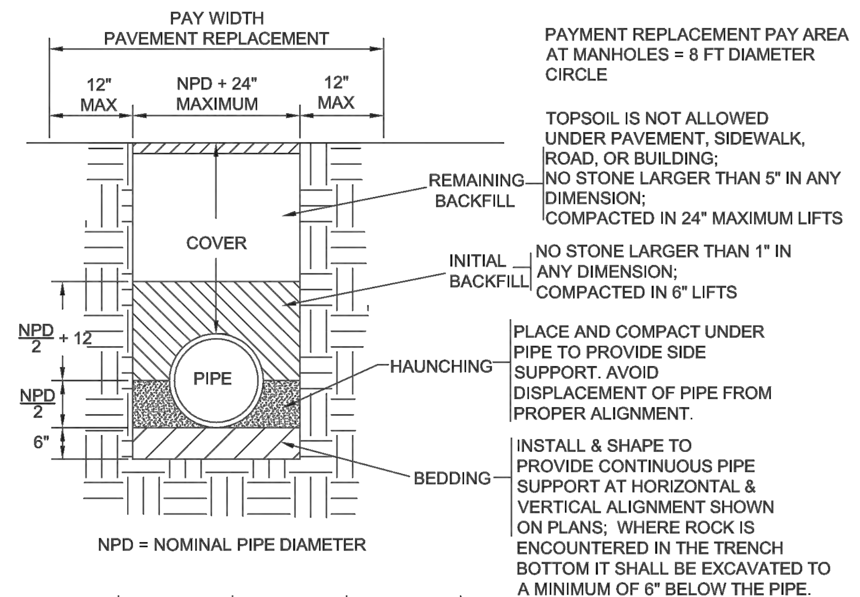

LAYING CONDITION	BEDDING	HAUNCHING	INITIAL BACKFILL	REMAINING BACKFILL
1	CONCRETE ENCASEMENT (SEE CITY STANDARD DETAIL)			
2	CRA #68	CRA #68	CRA #68	#21A AGGREGATE
3	CRA #68	CRA #68	CRA #68	LM (85% NO LOAD - 95% LIVE LOAD)
4	CRA #68	CRA #68	SLM (95%)	LM (85% NO LOAD - 95% LIVE LOAD)
5	SH (95%)	(REFER TO LAYING CONDITION 6 OR 7)		
6	SLM (95%)	SLM (95%)	SLM (95%)	LM (85% NO LOAD - 95% LIVE LOAD)
7	SLM (95%)	SLM (95%)	SLM (95%)	#21A AGGREGATE

PIPE TRENCH APPLICATIONS:

DUCTILE IRON WATER PIPE	LAYING CONDITION 6
DUCTILE IRON WATER PIPE IN EXISTING PAVEMENT	LAYING CONDITION 7
DUCTILE IRON WATER PIPE WITH ROCK UNDERCUT	LAYING CONDITION 5
DUCTILE IRON SEWER PIPE	LAYING CONDITION 4
DUCTILE IRON SEWER PIPE IN EXISTING PAVEMENT	LAYING CONDITION 2
PVC SEWER PIPE	LAYING CONDITION 3
PVC SEWER PIPE IN EXISTING PAVEMENT	LAYING CONDITION 2

NOTES:

A) COMPACTION SHOWN IN PARENTHESES SHALL BE DETERMINED BY ASTM D 698

B) MINIMUM SPECIFICATION: TRENCHES UNDER PAVEMENTS, SIDEWALKS, ROADS, & BUILDINGS SHALL BE COMPACTED TO 95% DENSITY AS DETERMINED BY ASTM D 698, 6 INCH MAXIMUM LIFTS.

C) IF NOT SPECIFIED OTHERWISE, MINIMUM COMPACTION SHALL BE BY ROLLING WITH EARTH-MOVING EQUIPMENT.

D) CRA SHALL BE VIBRATED USING A PLATE VIBRATOR OR SIMILAR EQUIPMENT TO REDUCE VOIDS AND LIMIT SETTLEMENT.

DESIGNATION	DESCRIPTION OF BACKFILL MATERIALS
CRA	COARSE AGGREGATE: VDOT SIZE AS SHOWN IN PARENTHESES
SLM	SELECT LOCAL MATERIAL: FREE OF DEBRIS, ROOTS, FROZEN MATERIALS, ORGANIC MATTER, STONES GREATER THAN 1" DIAMETER. UNIFIED SOILS CLASSIFICATION: ML/CL/MH/CH
LM	LOCAL MATERIALS: FREE OF STONES GREATER THAN 5" DIAMETER AND FOREIGN MATERIALS.
SH	WHERE USED AS BEDDING FOR ROCK UNDERCUT, USE MATERIAL WITH SOME PLASTIC TENDENCIES SUCH TO SEAL ROCK FISSURES, SUCH AS SHALE-CLAY MIX.

NOT TO SCALE

NO.	DATE	DESCRIPTION	INIT.
1.	7/01/04	2004 D&CSM UPDATE	SDC
2.	2/22/06	VDEQ REVIEW COMMENTS	DHG

REVISIONS — PIPE TRENCH DETAIL — DWG. NO. 1 — PAGE 15

1 C4.0 | C7.6 — PIPE TRENCH DETAIL — NOT TO SCALE

THE CITY OF HARRISONBURG, VIRGINIA — DESIGN AND CONSTRUCTION STANDARD

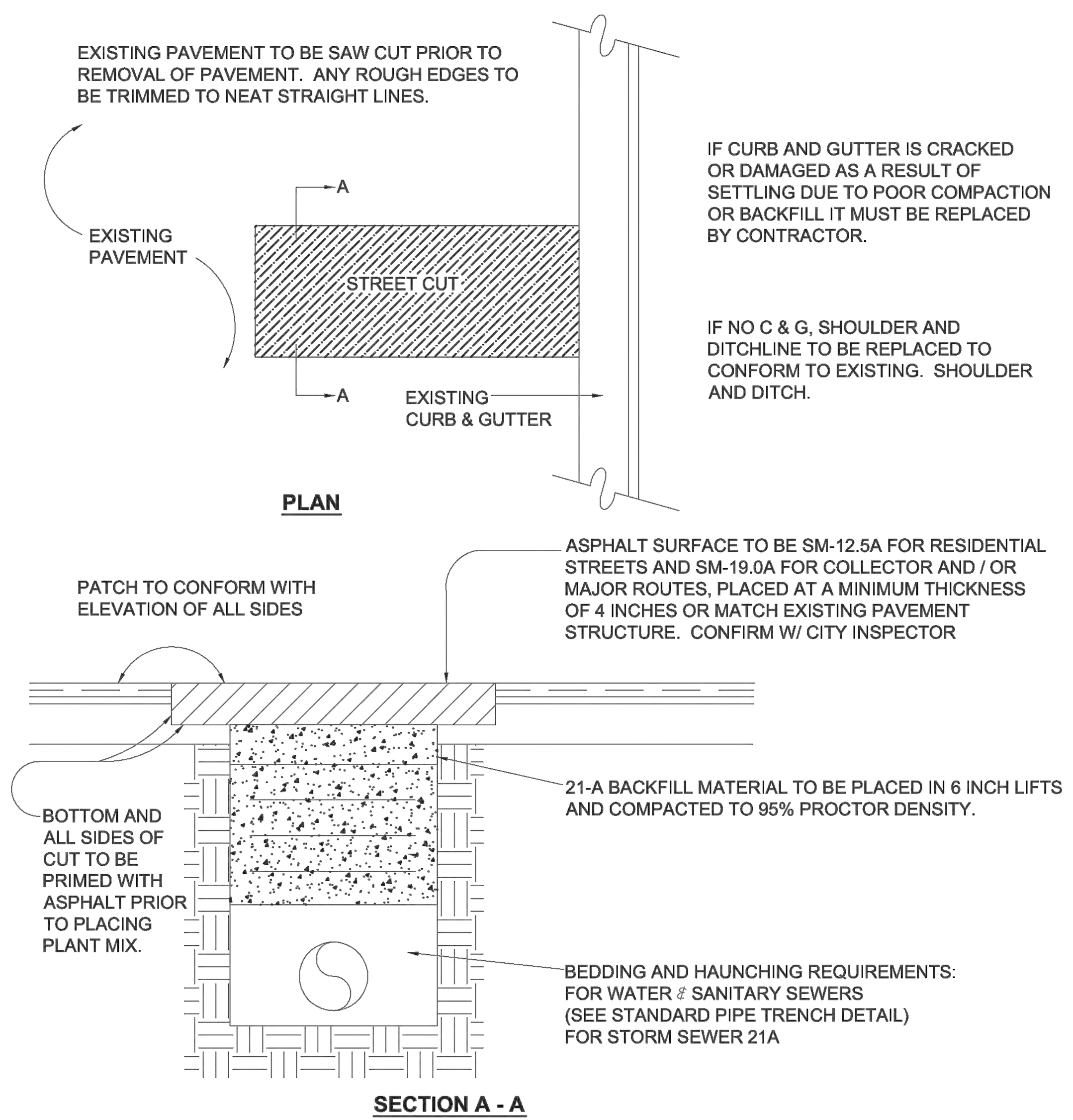

NOT TO SCALE

NO.	DATE	DESCRIPTION	INIT.
1.	9/21/04	2004 D&CSM UPDATE	SDC

STREET CUT AND REPAIR REQUIREMENTS — DWG. NO 1A — PAGE 15A

1A C4.0 | C7.6 — STREET CUT DETAIL — NOT TO SCALE

THE CITY OF HARRISONBURG, VIRGINIA — DESIGN AND CONSTRUCTION STANDARD

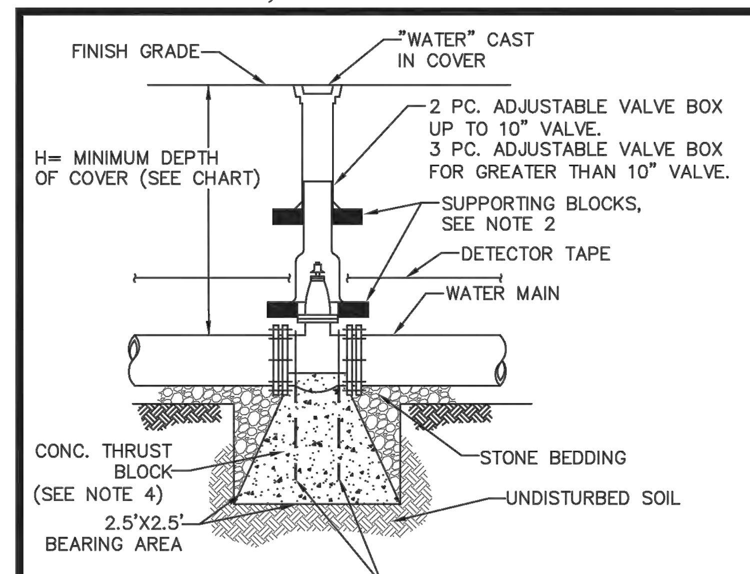

DEPTH OF COVER	
PIPE SIZE	H
≤ 10"	36"
12" & 16"	48"
< 16"	CASE BY CASE

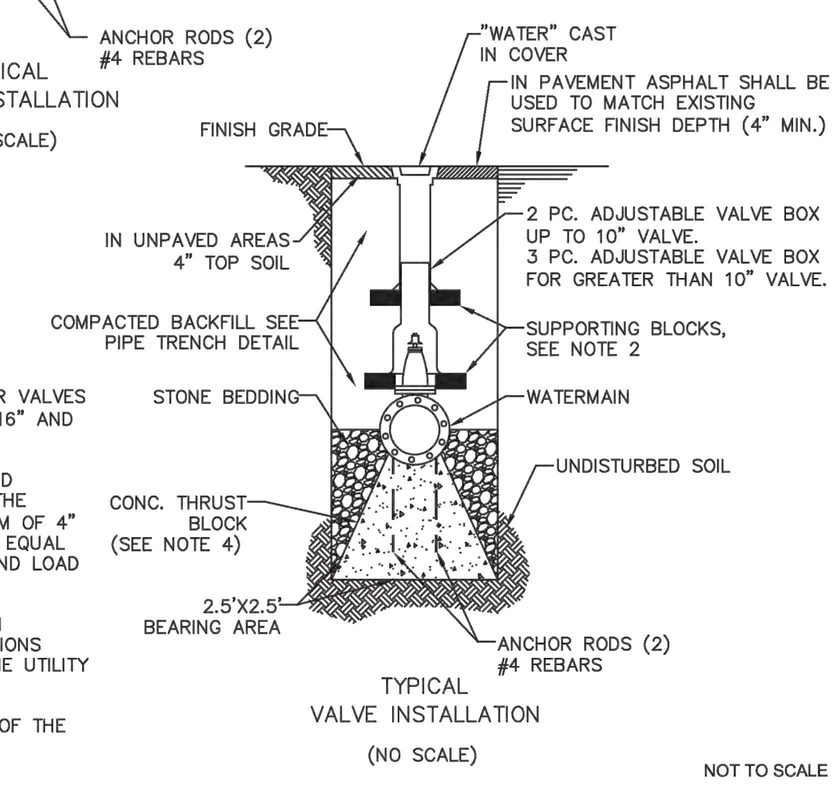

NOTE:

1. CONFIGURATION SHOWN FOR VALVES UP TO 16". FOR VALVES 16" AND LARGER SEE DWG. NO. 2A.
2. 4 BRICKS SHALL BE PLACED BENEATH EACH PIECE OF THE VALVE BOX WITH A MINIMUM OF 4" 21–A STONE BEDDING FOR EQUAL AND LEVEL ADJUSTMENT AND LOAD TRANSFER.
3. FIELD CUTS NECESSARY ON SHALLOW VALVE INSTALLATIONS MUST BE APPROVED BY THE UTILITY INSPECTOR.
4. REQUIRED AT THE OPTION OF THE DIRECTOR.

NOT TO SCALE

NO.	DATE	DESCRIPTION	INIT.
1.	9/21/04	2004 D&CSM UPDATE	SDC

TYPICAL GATE VALVE AND VALVE BOX INSTALLATION — DWG. NO 2 — PAGE 16

2 C4.0 | C7.6 — GATE VALVE DETAIL — NOT TO SCALE

HYDRANT FLOW TEST REPORT FOR → 3-E

HYDRANT FLOW TEST REPORT — Printed On 3/20/2013

Test Hydrant: **3-E** — Date: **3/20/2013** — Time: **10:00**

Location: Ramblewood Road

Elevation: **1308** ft — Tester: **JHF-ELR**

Remarks: Hydrant test shouldn't be used for flows above 1,500 gpm

Gage: Static Pressure: **90** — Residual Pressure: **88**

Static HGL: **1516**

-FLOW HYDRANT(S)-	-GAGE-	-DIAMETER-	-COEFFICIENT-	-PITOT-	-FLOW-	
3-F		2.5	0.90	**45**	**1126**	gpm
-		2.5	0.90		**0**	gpm
-		2.5	0.90		**0**	gpm

Total Flow: **1126** gpm

Flow @ 20 psi: **7677** gpm — Flow @ 10 psi: 8251 gpm

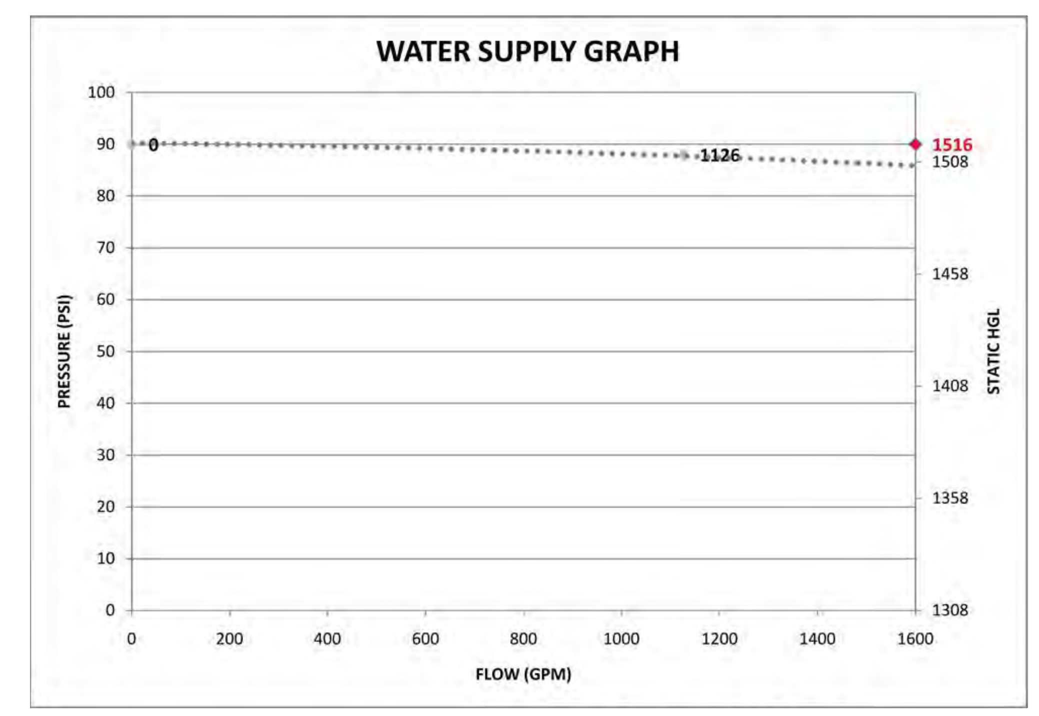

Flow @ 0 psi: 8793 gpm

M:\Performance Programs\909 Water Reliability\Fire Flow Tests\Fire Flow Test Software

THE CITY OF HARRISONBURG, VIRGINIA — DESIGN AND CONSTRUCTION STANDARD

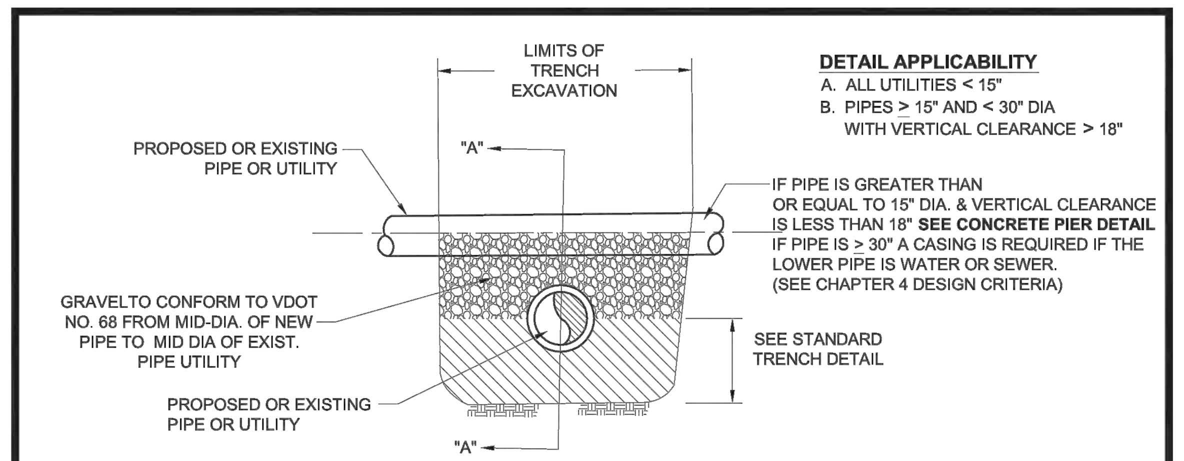

DETAIL APPLICABILITY
A. ALL UTILITIES < 15"
B. PIPES ≥ 15" AND < 30" DIA WITH VERTICAL CLEARANCE > 18"

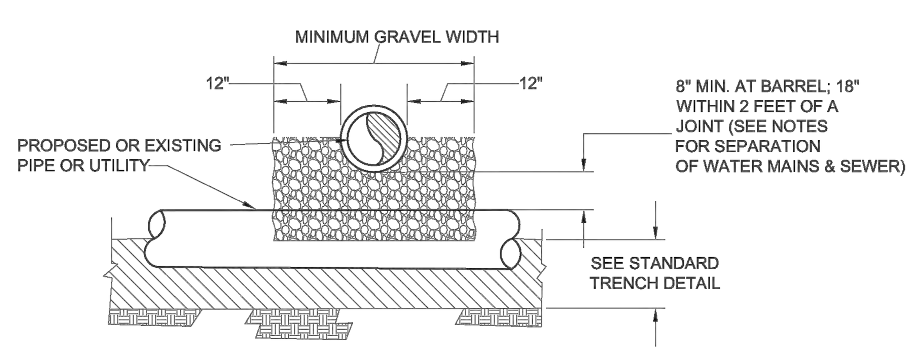

NOTES

1. SEPARATION OF WATER MAINS AND SEWERS AS FOLLOWS:
   A. UNDER NORMAL CONDITIONS WATER LINES CROSSING SEWERS SHALL BE LAID TO PROVIDE A SEPARATION OF AT LEAST 18 INCHES BETWEEN THE BOTOM OF THE WATER LINE AND THE TOP OF THE SEWER WHENEVER POSSIBLE.
   B. UNDER UNUSUAL CONDITIONS WHEN LOCAL CONDITIONS PREVENT A VERTICAL SEPARATION DESCRIBED IN A. (ABOVE) THE FOLLOWING CONSTRUCTION SHALL BE USED:
      1. SEWERS PASSING OVER OR UNDER WATER MAINS SHALL BE CONSTRUCTED OF THE MATERIALS REQUIRED FOR WATER MAIN CONSTRUCTION AND PRESSURE TESTED IN PLACE TO 30 PSI WITHOUT LEAKAGE.
      2. WATER LINES PASSING UNDER SEWERS SHALL, IN ADDITION, BE PROTECTED BY PROVIDING:
         A. A VERTICAL SEPARATION OF AT LEAST 18 INCHES BETWEEN THE BOTTOM OF THE SEWER AND THE TOP OF THE WATER LINE:
         B. ADEQUATE STRUCTURAL SUPPORT FOR THE SEWERS TO TO PROTECT EXCESSIVE DEFLECTION OF THE JOINTS AND THE SETTLING ON AND BREAKING OF THE WATER LINE; AND
         C. THAT THE LENGTH OF THE WATER AND SEWER LINE BE CENTERED AT THE POINT OF CROSSING SO THAT THE JOINTS SHALL BE EQUIDISTANT AND SEPARATED AS FAR AS POSSIBLE.

NOT TO SCALE

NO.	DATE	DESCRIPTION	INIT.
1.	7/01/04	2004 D&CSM UPDATE	SDC
2.	2/22/06	VDEQ REVIEW COMMENTS	DHG

REVISIONS — UTILITY AND PIPE CROSSINGS — DWG. NO. 18 — PAGE 32

18 C4.0 | C7.6 — UTILITY AND PIPE CROSSINGS DETAIL — NOT TO SCALE

THE CITY OF HARRISONBURG, VIRGINIA — DESIGN AND CONSTRUCTION STANDARD

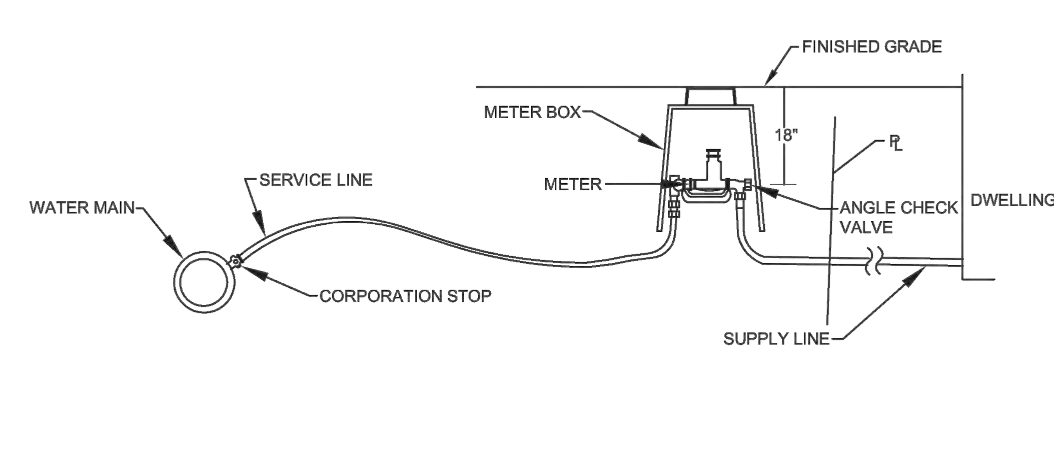

WATER METER ARRANGEMENTS

SERVICE LINE	WATER METER		SUPPLY LINE
3/4"	5/8" X 3/4"	3/4"	SEE NOTE 3 BELOW
1"	2 - 5/8" X 3/4"	2 - 3/4"	SEE NOTE 3 BELOW
1" (SEE NOTE 1)	5/8" X 3/4"	1"	SEE NOTE 3 BELOW
1"	1"	1"	SEE NOTE 3 BELOW
2"	1 1/2"		SEE NOTE 3 BELOW
2"	2"		SEE NOTE 3 BELOW
3"	3"		SEE NOTE 3 BELOW
4"	4"		SEE NOTE 3 BELOW
6"	6"		SEE NOTE 3 BELOW
8"	8"		SEE NOTE 3 BELOW

NOTES:

1. INCREASED SERVICE LINE SIZE MAY BE REQUIRED FOR RESIDENTIAL CUSTOMERS IN AREAS WHERE STATIC PRESSURE IS LOW.
2. WATER METER SIZE SHALL BE DETERMINED BASED ON FLOWRATE AS DETERMINED BY I.C.C OR AWWA APPROVED METHODS USING FIXTURE COUNT PROJECTIONS OR KNOWN DEMAND RATES.
3. CUSTOMERS SUPPLY LINE SHALL BE SIZED TO ADDRESS FRICTION LOSSES AND AVAILABLE PRESSURE.
4. MATERIAL SPECIFICATIONS PROVIDED IN THE PUBLIC UTILITIES PRODUCT MANUAL. CONSTRUCTION AND INSTALLATION SPECIFICATIONS PROVIDED IN THIS CHAPTER, PART 1.
5. SERVICES SHALL BE BACKFILLED WITH GOOD CLAY DIRT. STONE AGGREGATE MATERIALS AND BLASTED ROCK FRAGMENTS ARE NOT PERMITTED.

NOT TO SCALE

NO.	DATE	DESCRIPTION	INIT.
1.	7/01/04	2004 D&CSM UPDATE	DHG
2.	4/07/08	2005 D&CSM UPDATE	ELR

WATER SERVICE AND METER ARRANGEMENTS — DWG. NO 27 — PAGE 41

27 C4.0 | C7.6 — WATER SERVICE DETAIL — NOT TO SCALE

THE CITY OF HARRISONBURG, VIRGINIA — DESIGN AND CONSTRUCTION STANDARD

Ⓐ. VALVES TO REMAIN CLOSED DURING PRESSURE TEST.
Ⓑ. METER TO BE LOCKED OFF UNTIL ACCOUNT IS ESTABLISHED.
Ⓒ. APPROVED 2" BRASS NIPPLES 24" LENGTH EACH.

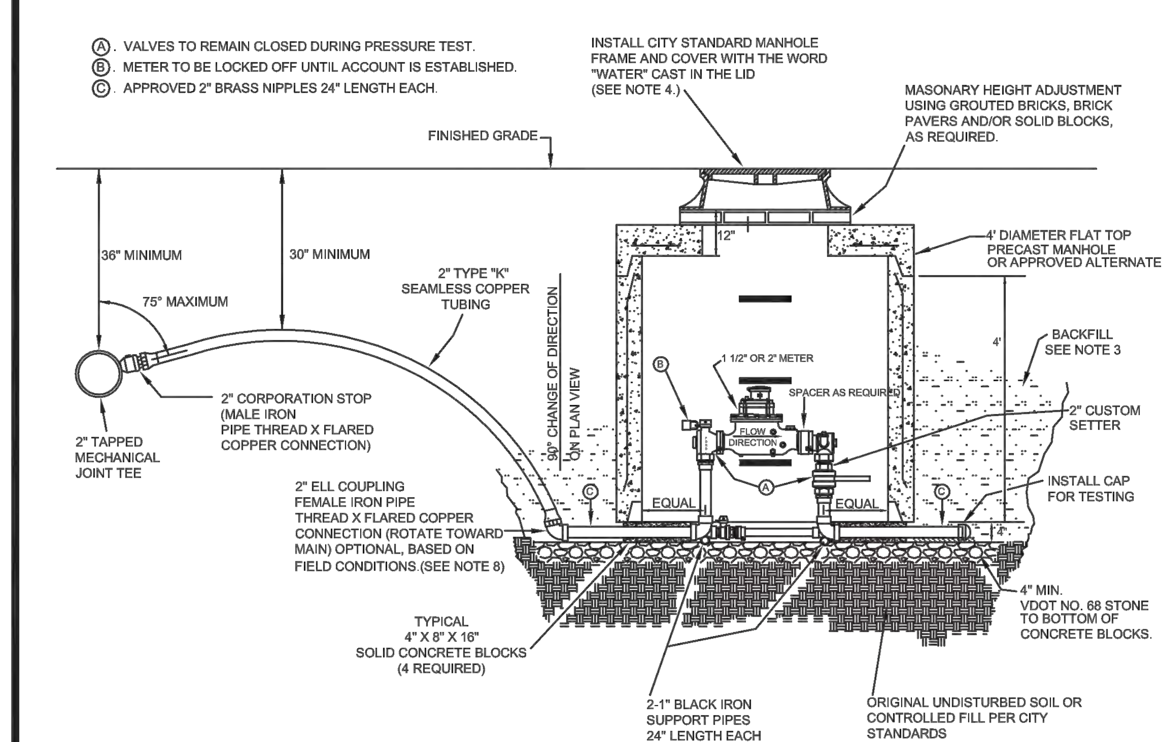

NOTES

1. ALL MATERIALS MUST BE APPROVED (SEE PUBLIC UTILITIES PRODUCT MANUAL)
2. FILLING, TESTING, & FLUSHING
   A. SERVICES SHALL BE PRESSURE TESTED FROM THE MAIN TO THE 2" TEST CAP, INCLUDING THE CUSTOM SETTER, IN ACCORDANCE WITH CITY STANDARDS, SIMULTANEOUSLY WITH THE MAIN.
   B. CUSTOM SETTER ANGLE VALVE AND 2" BALL VALVE SHALL REMAIN CLOSED DURING FILLING AND TESTING PROCEDURE. HIGHLY CHLORINATED TEST WATER SHALL NOT ENTER THE METER.
   C. UPON FLUSHING BY INSPECTOR, WATER SHALL BE INTRODUCED INTO THE METER THROUGH THE 2" BALL VALVE, FOR VISUAL INSPECTION FOR LEAKS UNDER WORKING PRESSURE.
   D. TEST PRESSURE SHALL BE PER CITY STANDARD, EXCEPT THAT IT MUST NOT EXCEED 150 PSI.
3. BACKFILL
   COPPER SERVICE LINES SHALL BE BACKFILLED TO A DEPTH OF 12" ABOVE THE PIPE WITH GOOD CLAY DIRT MEETING CITY STANDARD SPECIFICATION FOR SELECT LOCAL MATERIAL CHAPTER 7, DRAWING 1. (LAYING CONDITIONS 6 & 7 ARE APPLICABLE.) STONE AGGREGATE MATERIALS AND BLASTED ROCK FRAGMENTS ARE NOT PERMITTED.
4. FRAME & COVER INSTALLATION
   A. FLUSH TO MINUS 1/4 INCH WITH FINAL ASPHAULT PAVEMENT SURFACE
   B. FLUSH WITH CONCRETE SURFACES
   C. 2" ABOVE FINISHED GRADE PRIOR TO SODDING
   D. 1" AVOVE FINISHED GRADE PRIOR TO SEEDING
5. ADDITIONAL BRASS FLARE FITTINGS, IF REQUIRED DUE TO FIELD CONDITIONS, MUST BE APPROVED BY THE CITY UTILITY INSPECTOR.
6. COMPRESSION TYPE FITTINGS ARE NOT ALLOWED.
7. MANHOLE STRUCTURE TO BE LOAD RATED FOR HS-20 LIVE LOAD UNLESS OTHERWISE APPROVED BY THE DIRECTOR, CITY STANDARD VALVE BOX & STATIONARY ROD EXTENDING TO 8" MAX. BELOW TOP OF VALVE BOX
8. PARTIAL SERVICE BY CONTRACTOR TO TERMINATE WITH 2" BALL VALVE, CITY STANDARD VALVE BOX & STATIONARY ROD EXTENDING TO 8" MAX. BELOW TOP OF VALVE BOX, WHERE 2" ELL COUPLING IS SHOWN.

NOT TO SCALE

NO.	DATE	DESCRIPTION	INIT.
1.	9/21/04	2004 D&CSM UPDATE	SDC

REVISIONS — 2" WATER SERVICE FOR 1 1/2" AND 2" METERS — DWG. NO. 29 — PAGE 43

29 C4.0 | C7.6 — 2" WATER SERVICE DETAIL — NOT TO SCALE

COMMONWEALTH OF VIRGINIA — JULIA WALLACE SKARE — Lic. No. 43893 — 5/10/13 — PROFESSIONAL ENGINEER

Draper Aden Associates
Engineering • Surveying • Environmental Services

Blacksburg, VA
Richmond, VA
Hampton Roads, VA

Charlottesville, VA
700 Harris Street, Suite E
Charlottesville, VA 22903
434-295-0700 Fax: 434-295-2105
www.daa.com

WATER DETAILS

RAMBLEWOOD PARK IMPROVEMENTS

RAMBLEWOOD PARK, HARRISONBURG, VIRGINIA

REVISIONS

DESIGNED BY: JWS
DRAWN BY: ECB
CHECKED BY: GWC
SCALE: NO SCALE
DATE: MAY 10, 2013
PROJECT NUMBER: 06154-192CV

C7.6

P:\06100\06154\06154-192CV\CAD\6154-192CV_DSN\6154-192CV-DETAILS.dwg May 10, 2013 3:17:01 PM

THE CITY OF HARRISONBURG, VIRGINIA DESIGN AND CONSTRUCTION STANDARD

1. MANHOLE TO MEET CURRENT REQUIREMENTS OF ASTM C-478.
2. ALL REINFORCING TO MEET CURRENT REQUIREMENTS OF ASTM A-615.
3. CONCRETE TO BE CLASS A-4.
4. JOINT TO MEET CURRENT REQUIREMENTS OF ASTM C-443.
5. PIONEER 301 MASTIC OR APPROVED EQUAL SHALL BE USED IN ADDITON TO THE JOINT SPECIFIED.
6. INVERT SHAPING TO CONFORM TO CITY STANDARD DETAIL.
7. FLEXIBLE JOINTS, MEETING CURRENT REQUIREMENTS OF ASTM C-923, ARE REQUIRED ON ALL PIPE CONNECTIONS TO MANHOLES. WHERE FIELD CONDITIONS WILL NOT PERMIT THE USE OF A SLEEVE, A MAXIMUM 24" STUB MAY BE USED.
8. JOINT CONFIGURATION MAY BE CAST BELL-UP OR SPIGOT-UP.
9. MANUFACTURER'S NAME TO BE ON INSIDE FACE OF CONE.
10. EXTERIOR OF MANHOLE TO BE ASPHALT-COATED. TWO (2) COATS REQUIRED.

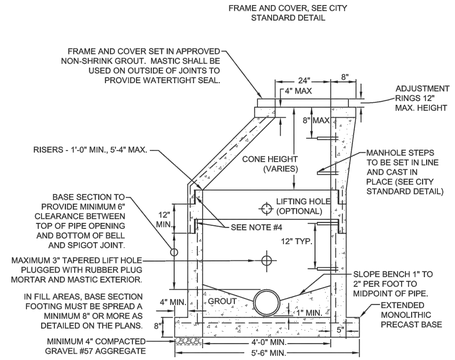

NOT TO SCALE

REVISIONS				4'-0" I.D. SANITARY SEWER MANHOLE	DWG. NO. 35
NO.	DATE	DESCRIPTION	INIT.		PAGE 49
1.	7/01/04	2004 D&CSM UPDATE	DHG		
2.	05/15/09	UPDATE ASTM REFERENCES	SDC		

35 C4.0 C7.7 SANITARY SEWER MANHOLE DETAIL
NOT TO SCALE

THE CITY OF HARRISONBURG, VIRGINIA DESIGN AND CONSTRUCTION STANDARD

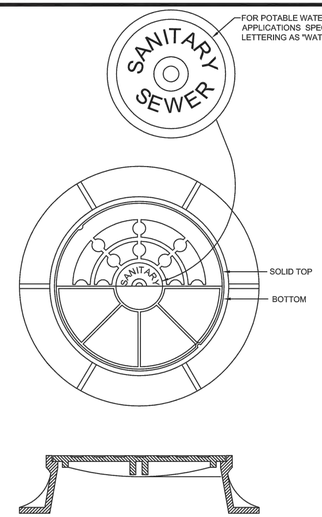

NOTES:

1. REFER TO PUBLIC UTILITIES PRODUCT MANUAL FOR APPROVED FRAME AND COVERS
2. FRAME AND COVER TO BE RATED FOR HIGHWAY TRAFFIC LOADS (HS-20)

NOT TO SCALE

REVISIONS				MANHOLE FRAME AND LID	DWG. NO. 38
NO.	DATE	DESCRIPTION	INIT.		PAGE 52
1.	7/01/04	2004 D&CSM UPDATE	DHG		
2.	2/22/06	VDEQ REVIEW COMMENTS	DHG		

38 C7.7 C7.7 MANHOLE FRAME DETAIL
NOT TO SCALE

THE CITY OF HARRISONBURG, VIRGINIA DESIGN AND CONSTRUCTION STANDARD

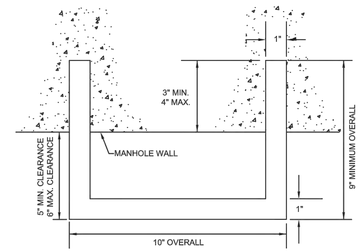

PLAN

NOTES:

1. APPROVED PLASTIC COATED STEEL REINFORCED MANHOLE SAFETY STEP (SEE PUBLIC UTILITIES PRODUCT MANUAL).
2. MANHOLE STEPS TO BE CAST IN PLACE AND ORIENTED IN A SINGLE VERTICAL LINE UNLESS OTHERWISE APPROVED.

NOT TO SCALE

REVISIONS				MANHOLE STEP DETAIL	DWG. NO. 39
NO.	DATE	DESCRIPTION	INIT.		PAGE 53
1.	7/01/04	2004 D&CSM UPDATE	DHG		

39 C7.7 C7.7 MANHOLE STEP DETAIL
NOT TO SCALE

THE CITY OF HARRISONBURG, VIRGINIA DESIGN AND CONSTRUCTION STANDARD

NOTES:

1. MANHOLE TO BE FORMED AND CONSTRUCTED IN ACCORDANCE WITH THE APPLICABLE STANDARD OR SPECIAL DRAWING. THE INVERT SHAPING AS DETAILED HEREON IS TO CONSIST OF PORTLAND CEMENT CONCRETE MIX CONFORMING TO CLASS A-3 OR CLASS C-1, EXCEPT THAT 25% OF COURSE AGGREGATE MAY BE UP TO 4" IN DIAMETER AND CONSIST OF STONE, BROKEN BRICK, BROKEN CONCRETE, OR BROKEN CONCRETE BLOCK. THE SURFACE SHALL BE LEFT SMOOTH BY MEANS OF HAND TROWELLING. NONE OF THE COARSE AGGREGATE SHALL REMAIN EXPOSED. BENCHES ARE TO HAVE A LIGHT BROOM FINISH.
2. DETAILS OF INVERT SHAPING AS SHOWN HEREON ARE FOR EXAMPLE PURPOSES ONLY. EACH MANHOLE IS TO BE SHAPED INDIVIDUALLY TO BEST FIT THE PARTICULAR INLET AND OUTLET CONFIGURATION AND FLOW LINES.

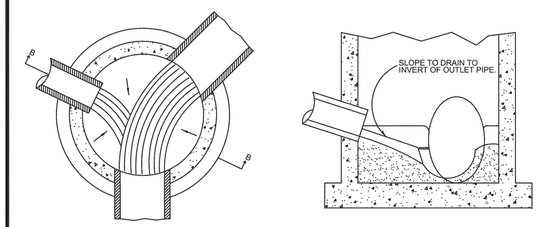

PLAN **SECTION B-B**

NOT TO SCALE

REVISIONS				SANITARY SEWER MANHOLE INVERT SHAPING	DWG. NO. 40
NO.	DATE	DESCRIPTION	INIT.		PAGE 54
1.	7/01/04	2004 D&CSM UPDATE	SDC		

40 C7.7 C7.7 MANHOLE SHAPING DETAIL
NOT TO SCALE

THE CITY OF HARRISONBURG, VIRGINIA DESIGN AND CONSTRUCTION STANDARD

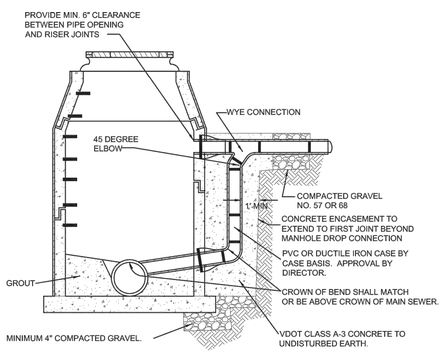

NOTES:

1. SEE APPLICABLE STANDARD DRAWINGS FOR ALL MANHOLE REQUIREMENTS.
2. USE DROP CONNECTION WHEN DROP EXCEEDS TWO FEET.
3. PIPE AND FITTINGS FOR DROP TO BE SAME SIZE AS INCOMING SEWER.
4. DROP CONNECTION MAY NOT INTERFERE WITH MANHOLE STEPS.
5. VDOT CLASS A-3 CONCRETE TO FILL DROP CONNECTION TRENCH TO LIMITS SHOWN. DROP CONNECTION CONCRETE WIDTH TO BE THE SAME AS APPROACH TRENCH.
6. MATERIAL SPECIFICATIONS SEE PUBLIC UTILITIES PRODUCT MANUAL.

NOT TO SCALE

REVISIONS				ENCASED OUTSIDE DROP CONNECTION	DWG. NO. 44
NO.	DATE	DESCRIPTION	INIT.		PAGE 58
1.	7/01/04	2004 D&CSM UPDATE	SDC		

44 C7.7 C7.7 MANHOLE STEP DETAIL
NOT TO SCALE

THE CITY OF HARRISONBURG, VIRGINIA DESIGN AND CONSTRUCTION STANDARD

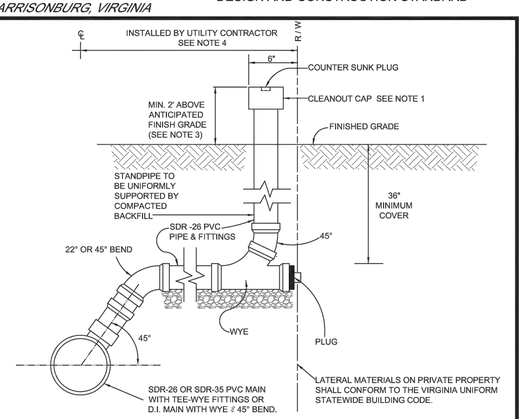

ELEVATION
(4" CONNECTION SHOWN)

NOTES:

1. CLEANOUT CAP SHALL BE AN APPROVED 4" CAST IRON CAP WITH A BRASS COUNTER-SUNK PLUG. PLASTIC PLUGS ARE NOT PERMITTED. (SEE PUBLIC UTILITIES PRODUCT MANUAL)
2. THIS DETAIL APPLIES TO CLEANOUTS NOT SUBJECT TO TRAFFIC LOADING. (SEE CITY STANDARD "HEAVY DUTY SEWER LATERAL CLEAN-OUT" FOR TRAFFIC LOCATIONS)
3. THE SEWER LATERAL AND CLEANOUT SHALL BE INSTALLED WITHIN THE RIGHT-OF-WAY OR EASEMENT AS SHOWN ABOVE BY UTILITY CONTRACTOR, PLUGGED AND STAKED. THE PLUMBER SHALL INSTALL THE SEWER LATERAL TO THE BUILDING AND SHALL ADJUST CLEANOUT TO FINISH GRADE.
4. CITY FORCES BECOME THE UTILITY CONTRACTOR WHEN TAPPING INTO AN EXISTING ACTIVE SEWER MAIN. WHERE TEE-WYE FITTINGS ARE NOT AVAILABLE FOR CONNECTION OF A PROPOSED 4" SEWER LATERAL, CITY FORCES SHALL MAKE THE TAP TO THE ACTIVE MAIN USING AN APPROVED SADDLE.
5. **4' DIAMETER PRECAST MANHOLE REQUIRED AT PUBLIC MAIN CONNECTION FOR 6" LATERALS.**

NOT TO SCALE

REVISIONS				SANITARY SEWER LATERAL (PROFILE)	DWG. NO. 49
NO.	DATE	DESCRIPTION	INIT.		PAGE 63
1.	9/22/04	2004 D&CSM UPDATE	SDC		
2.	02/22/06	P.U. MODIFICATIONS	DHG		

49 C4.0 C7.7 LATERAL DETAIL
NOT TO SCALE

COMMONWEALTH OF VIRGINIA
JULIA WALLACE SKARE
Lic. No. 43893
5/10/13
PROFESSIONAL ENGINEER

Draper Aden Associates
Engineering • Surveying • Environmental Services
Blacksburg, VA
Richmond, VA
Hampton Roads, VA
Charlottesville, VA
705 Harris Street, Suite E
Charlottesville, VA 22903
434-295-0700 Fax: 434-295-2105
www.das.com

SANITARY SEWER DETAILS

RAMBLEWOOD PARK IMPROVEMENTS

RAMBLEWOOD PARK, HARRISONBURG, VIRGINIA

REVISIONS

DESIGNED BY:	JWS
DRAWN BY:	ECB
CHECKED BY:	GWC
SCALE:	NO SCALE
DATE:	MAY 10, 2013
PROJECT NUMBER:	06154-192CV

C7.7

P:\06150\06154\06154-192CV\CAD\C8154-192CV_DRW\154-192CV DETAILS.dwg May 10, 2013 3:17:12 PM

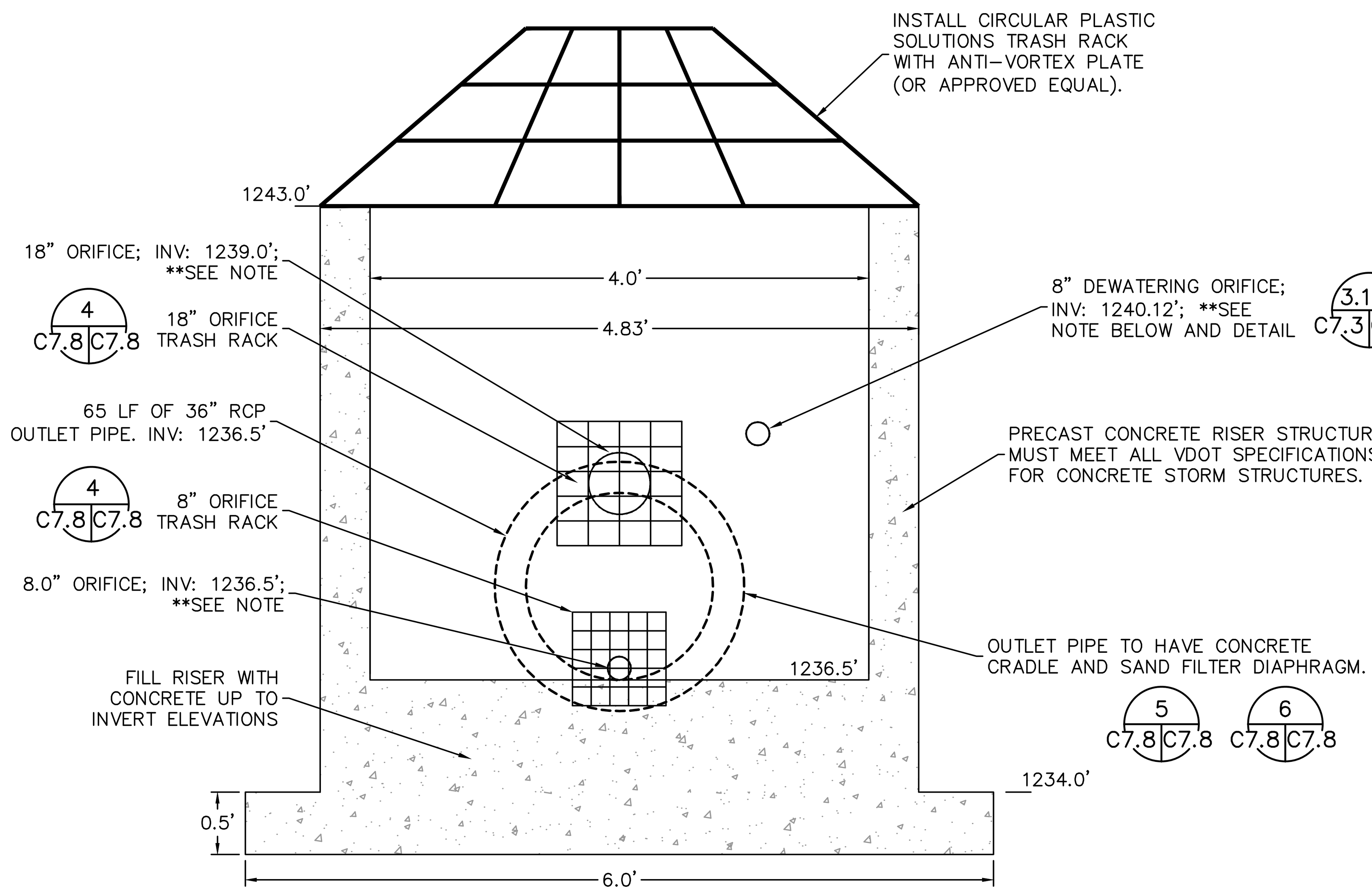

** NOTE: RISER STRUCTURE TO BE INSTALLED AS PART OF SEDIMENT BASIN CONSTRUCTION. RISER SHALL BE MANUFACTURED WITH THE 8" ORIFICE FOR THE SEDIMENT BASIN DRAINAGE TUBING OPEN AND THE 8" DRAW-DOWN AND 18" SECONDARY ORIFICE PLUGGED. AFTER UPSTREAM AREAS ARE STABILIZED AND THE BASIN IS READY FOR CONVERSION TO A PERMANENT STORMWATER MANAGEMENT FACILITY, REMOVE THE DRAINAGE TUBING AND PLUG THE 8" OPENING WITH CONCRETE AND OPEN THE OTHER TWO ORIFICES. INSTALL TRASH RACKS OVER PERMANENT ORIFICES .

1 C2.2 C7.8 C2.4

STORMWATER BASIN RISER

NOT TO SCALE

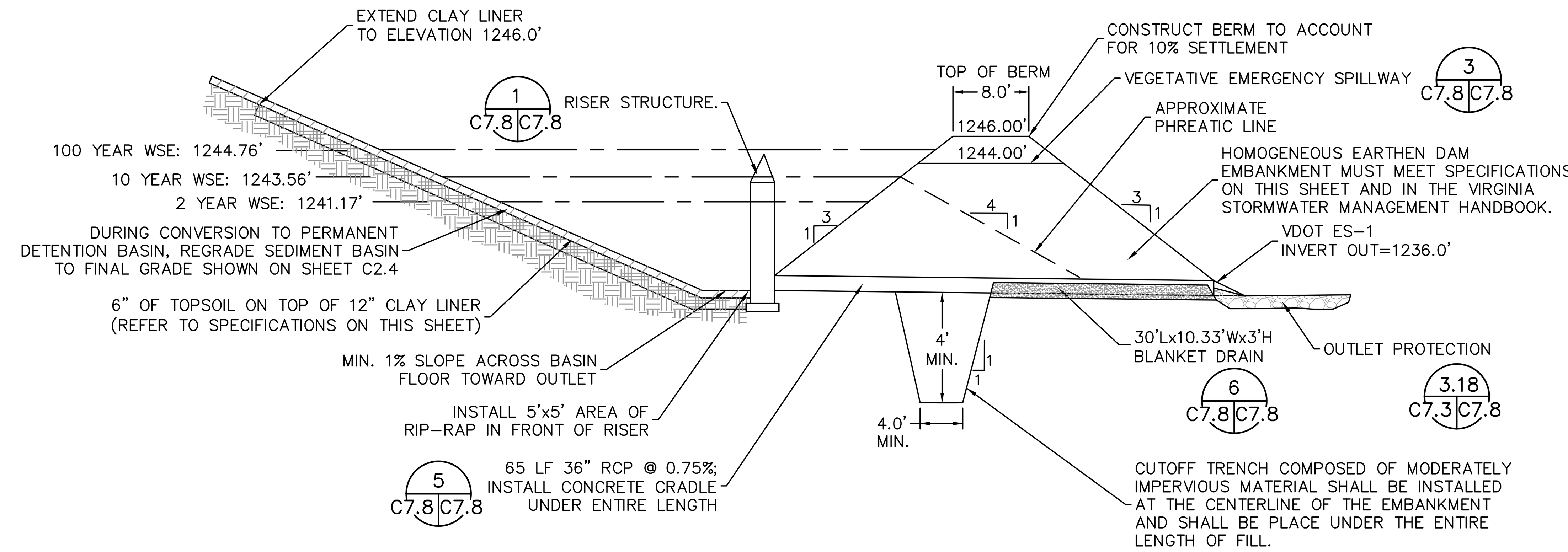

2 C2.4 C7.8

EXTENDED DETENTION BASIN CROSS-SECTION

NOT TO SCALE

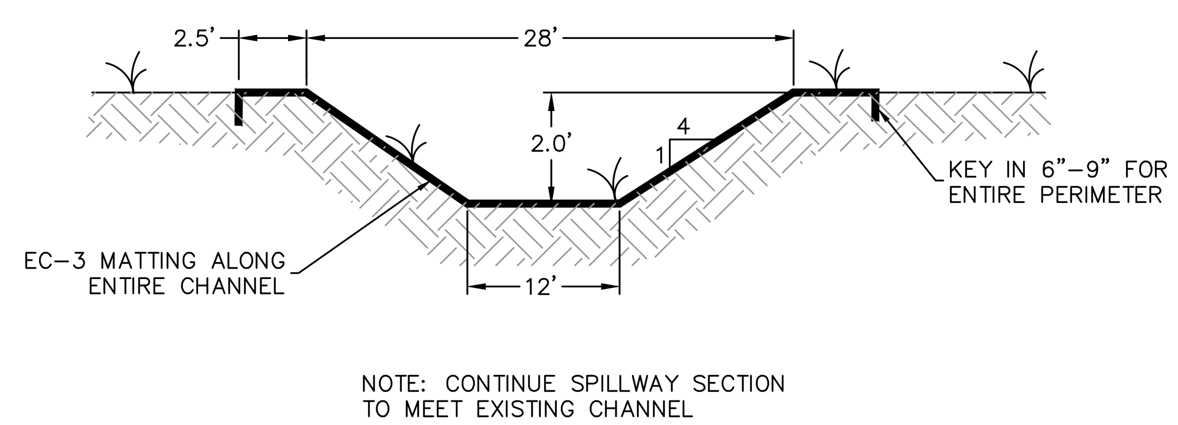

NOTE: CONTINUE SPILLWAY SECTION TO MEET EXISTING CHANNEL

3 C7.8 C7.8

VEGETATED EMERGENCY SPILLWAY SECTION

NOT TO SCALE

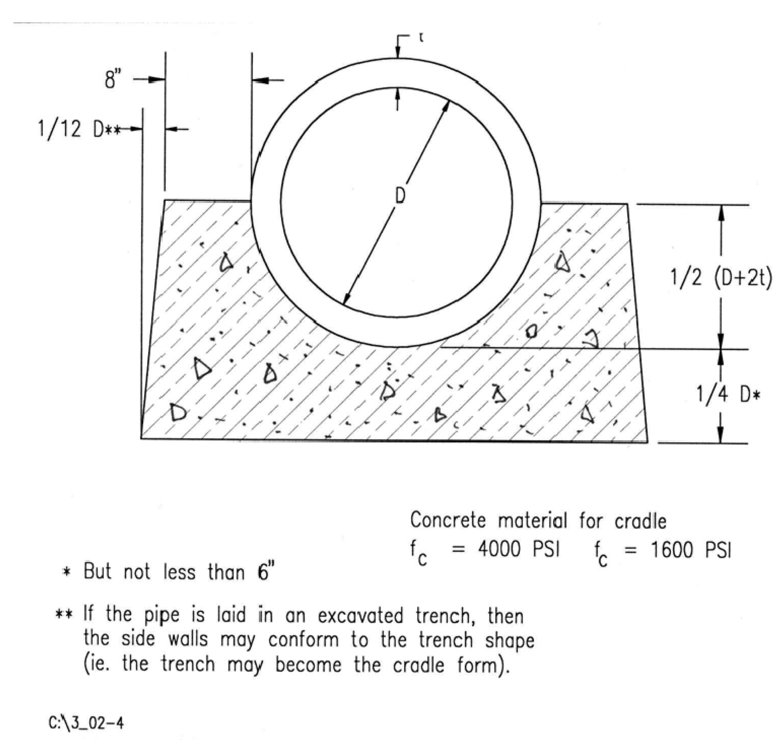

5 C7.8 C7.8

CONCRETE CRADLE (D=36")

NOT TO SCALE

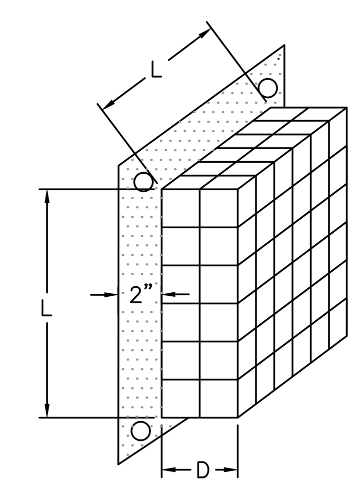

TRASH RACK:
HOT DIP GALVANIZED #4 REBAR;
2" GALV. STEEL STRIP ALL AROUND;
½" DIAMETER BOLT HOLES IN EACH CORNER FOR STAINLESS STEEL BOLTS

8" ORIFICE:
3" CLEAR SPACE BETWEEN BARS;
L: 18"; D: 6"

18" ORIFICE:
6" CLEAR SPACE BETWEEN BARS;
L: 30"; D: 12"

4 C7.8 C7.8

TRASH RACK DETAIL

NOT TO SCALE

DAM EMBANKMENT SPECIFICATIONS

1. HOMOGENEOUS EARTHEN DAM MATERIAL – FILL MATERIAL SHOULD BE TAKEN FROM AN APPROVED, DESIGNATED BORROW AREA. IT SHOULD BE FREE OF ROOTS, STUMPS, WOOD, RUBBISH, STONES GREATER THAN THREE INCHES, AND FROZEN OR OTHER OBJECTIONABLE MATERIALS. FILL MATERIAL FOR THE CENTER OF THE EMBANKMENT AND THE CUTOFF TRENCH SHOULD CONFORM TO UNIFIED SOIL CLASSIFICATION GC, SC, OR CL. CONSIDERATION MAY BE GIVEN TO THE USE OF OTHER MATERIALS IN THE EMBANKMENT IF THE DESIGN AND CONSTRUCTION ARE SUPERVISED BY A GEOTECHNICAL ENGINEER.
2. PLACEMENT – AREAS ON WHICH FILL IS TO BE PLACED SHOULD BE SCARIFIED BEFORE ITS PLACEMENT. FILL MATERIAL SHOULD BE PLACED IN LAYERS A MAXIMUM OF 8 INCHES THICK (BEFORE COMPACTION), WHICH SHOULD BE CONTINUOUS OVER THE ENTIRE LENGTH OF THE FILL. THE MOST PERMEABLE BORROW MATERIAL SHOULD BE PLACED IN THE DOWNSTREAM PORTIONS OF THE EMBANKMENT. THE PRINCIPAL SPILLWAY MUST BE INSTALLED CONCURRENTLY WITH FILL PLACEMENT AND NOT EXCAVATED INTO THE EMBANKMENT.
3. COMPACTION – FILL MATERIAL SHOULD BE COMPACTED WITH APPROPRIATE COMPACTION EQUIPMENT SUCH AS A SHEEPSFOOT, RUBBER-TIRED OR VIBRATORY ROLLER. THE NUMBER OF REQUIRED PASSES BY THE COMPACTION EQUIPMENT OVER THE FILL MATERIAL MAY VARY WITH SOIL CONDITIONS. FILL MATERIAL SHOULD CONTAIN SUFFICIENT MOISTURE SUCH THAT THE REQUIRED DEGREE OF COMPACTION WILL BE OBTAINED WITH THE EQUIPMENT USED. THE MINIMUM REQUIRED DENSITY IS 95% OF MAXIMUM DRY DENSITY AND WITHIN 2% OF THE OPTIMUM MOISTURE CONTENT AS DETERMINED BY THE MODIFIED PROCTOR TEST (ASTM D1557). THE MINIMUM REQUIRED DENSITY IS 98% OF MAXIMUM DRY DENSITY WITH A MOISTURE CONTENT 0–3% ABOVE THE OPTIMUM, UNLESS OTHERWISE SPECIFIED BY THE ENGINEER. EACH LAYER OF THE FILL SHOULD BE COMPACTED AS NECESSARY TO OBTAIN MINIMUM DENSITY AND THE ENGINEER SHOULD CERTIFY, AT THE TIME OF CONSTRUCTION, THAT EACH FILL LAYER MEETS THE MINIMUM DENSITY REQUIREMENT.
4. TOP SOIL – THE SURFACE LAYER OF COMPACTED SUBGRADE SHOULD BE SCARIFIED PRIOR TO PLACEMENT OF AT LEAST 6 INCHES OF TOP SOIL. THE TOP SOIL SHALL BE STABILIZED WITH IN ACCORDANCE WITH THE VIRGINIA EROSION AND SEDIMENT CONTROL HANDBOOK, LATEST EDITION.

ADDITIONAL DAM REQUIREMENTS:

- A GEOTECHNICAL OR CONSTRUCTION INSPECTOR SHALL BE ON SITE DURING EMBANKMENT CONSTRUCTION. INSPECTORS SHOULD BE REQUIRED TO DO MORE THAN JUST TEST FILL COMPACTION, I.E., OBSERVE FOUNDATION PREPARATION, PIPE INSTALLATION, RISER CONSTRUCTION, FILTER INSTALLATION, ETC.
- COMPACTION TESTS SHALL BE PERFORMED REGULARLY THROUGHOUT THE EMBANKMENT CONSTRUCTION; TYPICALLY, ONE TEST PER 5,000 SQUARE FEET ON EACH LAYER OF FILL
- BACKFILL THAT IS BESIDE PIPES OR STRUCTURES SHALL BE OF THE SAME TYPE AND QUALITY AS SPECIFIED FOR THE ADJOINING FILL MATERIAL. THE FILL SHALL BE PLACED IN HORIZONTAL LAYERS NOT TO EXCEED 4 INCHES IN THICKNESS AND COMPACTED BY HAND TAMPERS OR OTHER MANUALLY DIRECTED COMPACTION EQUIPMENT. THE MATERIAL SHALL COMPLETELY FILL ALL SPACES UNDER AND BESIDE THE PIPE. DURING THE BACKFILLING OPERATION, EQUIPMENT SHOULD NOT BE DRIVEN CLOSER THAN 4 FEET, AS MEASURED HORIZONTALLY, TO ANY PART OF A STRUCTURE. ALSO, EQUIPMENT SHOULD NEVER BE DRIVEN OVER ANY PART OF A STRUCTURE OR PIPE, UNLESS COMPACTED FILL HAS BEEN PLACED TO A DEPTH SPECIFIED BY THE STRUCTURAL LIVE LOAD CAPACITY OF THE STRUCTURE OR PIPE IN ORDER TO ADEQUATELY DISTRIBUTE THE LOAD.
- WHEN USING A LINER, THE FOLLOWING REQUIREMENTS APPLY:
  1. A CLAY LINER SHALL HAVE A MINIMUM THICKNESS OF 12 INCHES AND SHALL COMPLY WITH THE SPECIFICATIONS PROVIDED IN TABLE 3.07-3.
  2. A LAYER OF COMPACTED TOPSOIL (MINIMUM 6 TO 12 INCHES THICK) SHALL BE PLACED OVER THE LINER BEFORE SEEDING WITH AN APPROPRIATE SEED MIXTURE (REFER TO VESCH, 1992 EDITION)
  3. OTHER LINER TYPES MAY BE USED IF SUPPORTING DOCUMENTATION IS PROVIDED VERIFYING THE LINER MATERIAL'S PERFORMANCE.

CLAY LINER SPECIFICATIONS

PROPERTY	TEST METHOD(OR EQUAL)	UNIT	SPECIFICATION
PERMEABILITY	ASTM D-2434	CM/SEC	1 X 10-6
PLASTICITY INDEX OF CLAY	ASTM D-423 & D-424	%	NOT LESS THAN 15
LIQUID LIMIT OF CLAY	ASTM D-2216	%	NOT LESS THAN 30
CLAY PARTICLES PASSING	ASTM D-422	%	NOT LESS THAN 30
CLAY COMPACTION	ASTM D-698	%	95%

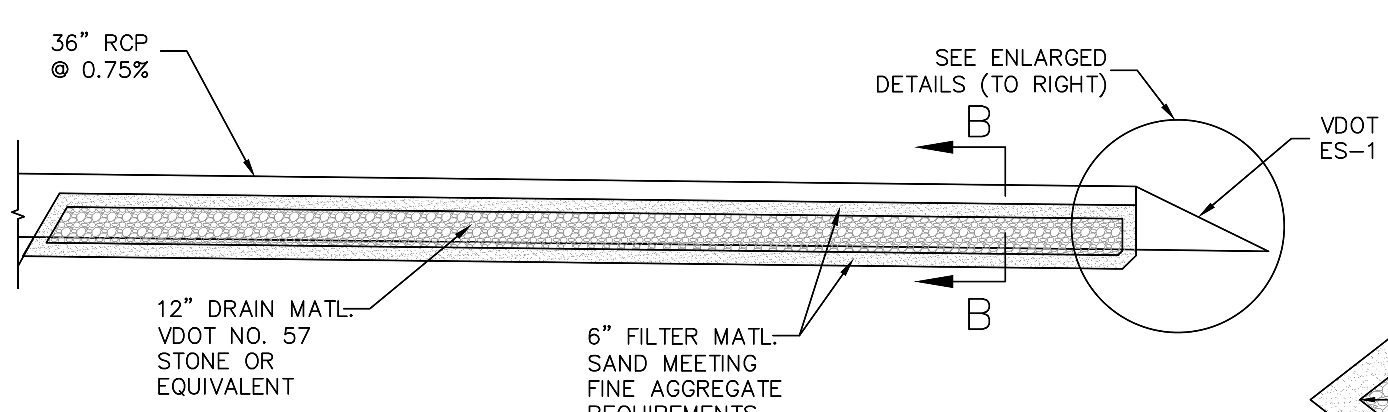

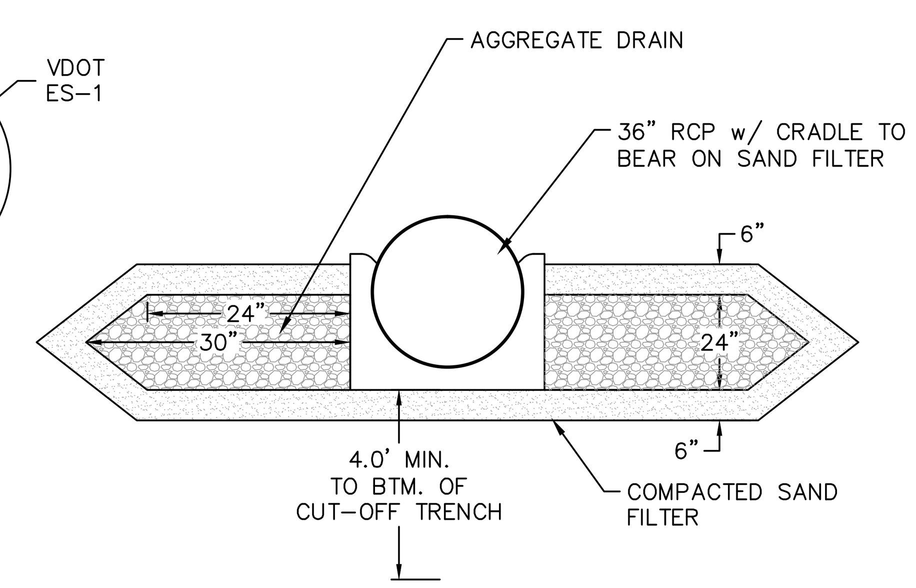

SECTION B-B

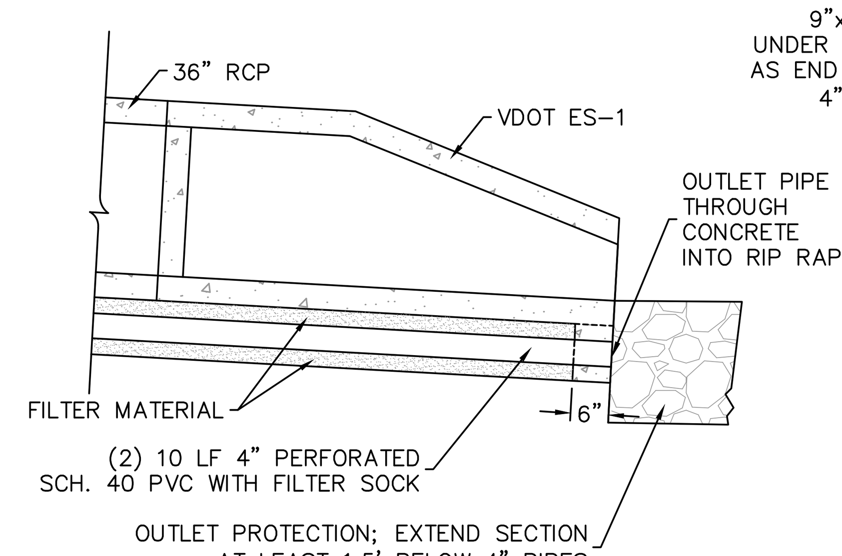

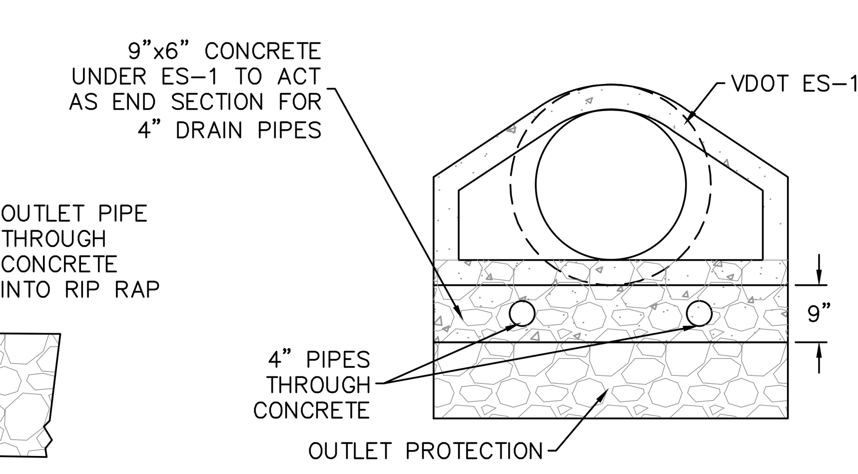

OVERALL, THE FOLLOWING CRITERIA APPLY TO THE USE OF BLANKET DRAIN:
1. THE DIAPHRAGM SHOULD CONSIST OF SAND, MEETING FINE CONCRETE AGGREGATE REQUIREMENTS (AT LEAST 15% PASSING THE NO. 40 SIEVE BUT NO MORE THAN 10% PASSING THE NO. 100 SIEVE). IF UNUSUAL SOIL CONDITIONS EXIST, A SPECIAL ANALYSIS SHOULD BE COMPLETED.
2. THE BLANKET DRAIN SHOULD BE PLACED IMMEDIATELY DOWNSTREAM OF THE CUTOFF TRENCH, APPROXIMATELY PARALLEL TO THE OUTFALL PIPE.
3. THE DIAPHRAGM SHOULD BE DISCHARGED AT THE DOWNSTREAM TOE OF THE EMBANKMENT.

6 C7.8 C7.8

BLANKET DRAIN DETAIL

NOT TO SCALE

NOTE: THE CONTRACTOR IS RESPONSIBLE FOR PROVIDING ALL REQUIRED INFORMATION TO VERIFY THE STORMWATER MANAGEMENT SYSTEM IS CONSTRUCTED IN ACCORDANCE WITH THESE PLANS AND THE VIRGINIA STORMWATER MANAGEMENT HANDBOOK (APPENDIX 3B).

DETENTION BASIN MAINTENANCE: THE CITY OF HARRISONBURG IS RESPONSIBLE FOR THE MAINTENANCE OF THE EXTENDED DETENTION BASIN:
- INSPECTIONS AND MOWING WILL BE CONDUCTED AT MINIMUM TWICE PER YEAR AND AFTER ADVERSE STORM EVENTS.
- ALL ERODED AREAS AND STRUCTURAL DEFICIENCIES SHALL BE IMMEDIATELY REPAIRED.
- ACCUMULATED SEDIMENT AND/OR DEBRIS SHALL BE REMOVED.
- ALL OTHER MAINTENANCE ITEMS NEEDED TO ENSURE THE BASIN OPERATES AS DESIGNED.

COMMONWEALTH OF VIRGINIA
JULIA WALLACE SKARE
Lic. No. 43893
5/10/13
PROFESSIONAL ENGINEER

Draper Aden Associates
Engineering • Surveying • Environmental Services
Charlottesville, VA
700 Harris Street, Suite E
Charlottesville, VA 22903
434-295-0700 Fax: 434-295-2105
www.daa.com
Blacksburg, VA
Richmond, VA
Hampton Roads, VA

STORMWATER DETAILS

RAMBLEWOOD PARK IMPROVEMENTS

RAMBLEWOOD PARK, HARRISONBURG, VIRGINIA

REVISIONS

DESIGNED BY:	JWS
DRAWN BY:	ECB
CHECKED BY:	GWC
SCALE:	NO SCALE
DATE:	MAY 10, 2013
PROJECT NUMBER:	06154-192CV

C7.8

P:\06100\06154\06154-192CV\CAD\6154-192CV_DSN\6154-192CV-DETAILS.dwg May 10, 2013 3:17:15 PM

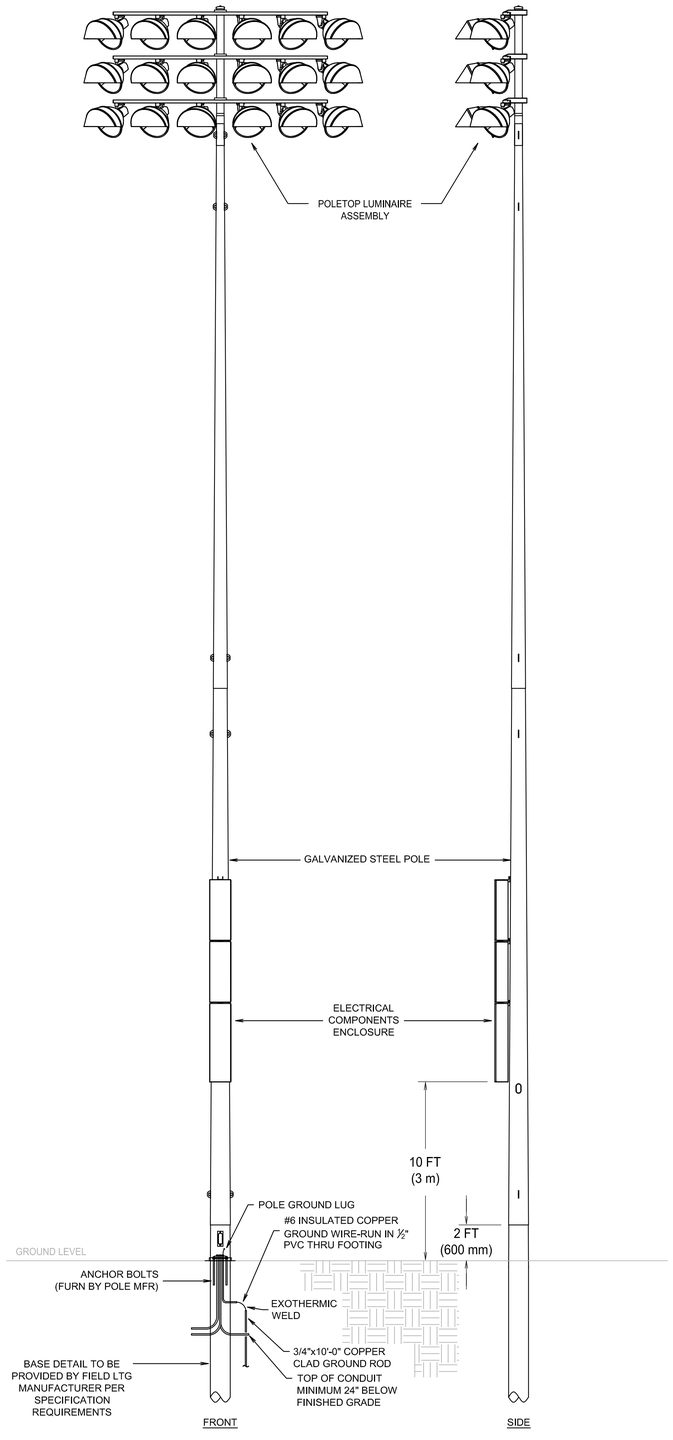

4 – E0.0 TYPICAL FIELD LIGHTING POLE DETAIL

SCALE: NONE

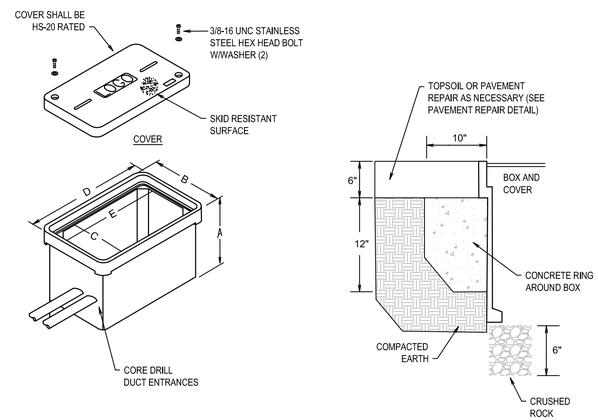

3 – E0.0 IN-GRADE PULL BOX DETAIL

SCALE: NONE

NOTES:
1. HOUSING SHALL BE A POLYMER CONCRETE REINFORCED WITH A HEAVY WEAVE FIBERGLASS REINFORCING WITH COMPRESSIVE STRENGTH OF NO LESS THAN 10,000 PSI.
2. PROVIDE STAINLESS STEEL BOLTS AND INSERTS.

SCHEDULE

HANDHOLE TYPE	DIMENSION					CUSTOM COVER DESIGNATION
	A	B	C	D	E	
A	18"	15-1/2"	11-3/4"	25"	21-1/4'	LIGHTING
B	24"	26"	22-1/4"	37-5/8"	33-7/8"	LIGHTING
C	33"	32-1/8'	28-1/8"	49-5/8'	45-5/8"	LIGHTING

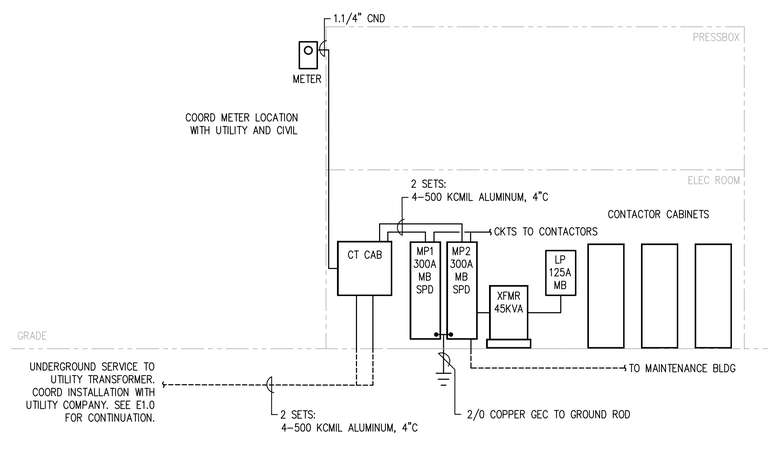

2 – E0.0 RISER DIAGRAM

SCALE: NONE

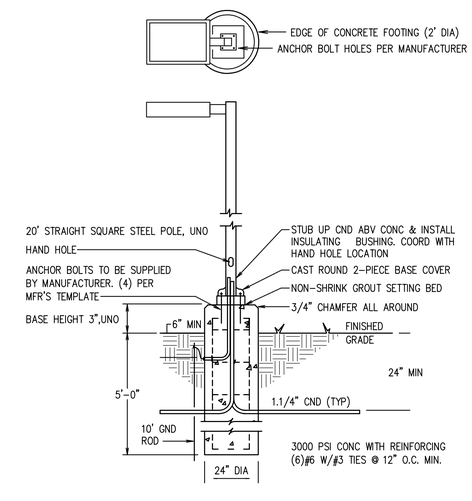

1 – E0.0 POLE BASE DETAIL

SCALE: NONE

GENERAL NOTES ELECTRICAL

1. ALL WORK SHALL BE PERFORMED IN ACCORDANCE WITH VUSBC 2009, NEC 2008 AND ALL LOCAL CODES.
2. UNDERGROUND CONDUIT RUNS ARE SHOWN BY A SINGLE LINE, HOWEVER, THEY MAY REPRESENT MULTIPLE CIRCUITS AND CONDUITS. REQUIREMENTS ARE GIVEN ON THE FIELD LIGHTING POLE SCHEDULE AND KEY NOTES.
3. DIVISION 26 CONTRACTOR(S) SHALL COORDINATE THEIR WORK WITH ALL OTHER TRADES PRIOR TO FABRICATION OF SYSTEMS AND COMMENCEMENT OF INSTALLATION. IT SHALL BE THE RESPONSIBILITY OF EACH CONTRACTOR TO REVIEW THE WORK OF OTHER TRADES (INCLUDING, BUT NOT LIMITED TO CIVIL) AS IT AFFECTS THE ELECTRICAL WORK, AND AS THEIR WORK AFFECTS OTHER TRADES, TO INSURE THAT THE CONSTRUCTION DOCUMENTS ARE CLOSELY FOLLOWED. WHERE DISCREPANCIES ARISE, THEY SHALL BE REFERRED TO THE ARCHITECT/ENGINEER FOR RESOLUTION BEFORE PROCEEDING WITH THE WORK.

LEGEND

- CIRCUIT HOMERUN
- UNDERGROUND CONDUIT/WIRING
- PANELBOARD, 480/277V
- PANELBOARD, 208/120V
- WP — QUAD RECEPTACLE, WEATHERPROOF COVER, GROUND FAULT CIRCUIT INTERRUPTER TYPE
- WALL MOUNTED STEEL JUNCTION BOX, 4" SQUARE NOMINAL
- IN GROUND PULL BOX
- EXTERIOR BUILDING MOUNTED LIGHT FIXTURE
- EXTERIOR SITE LIGHT FIXTURE
- XX / X — SPORTS LIGHTING POLE, WITH PULL BOX LETTERS INDICATE POLE AND ZONE(S)

ABBREVIATIONS

A	AMPS, AMPERE
AFG	ABOVE FINISHED GRADE
BRKR	BREAKER
BLDG	BUILDING
C,CND	CONDUIT
CKT	CIRCUIT
CONC	CONCRETE
COORD	COORDINATE
DIA	DIAMETER
EC	ELECTRICAL CONTRACTOR
ELEC	ELECTRIC
FUT	FUTURE
GEC	GROUNDING ELECTRODE CONDUCTOR
GFCI	GROUND FAULT CIRCUIT INTERRUPTER
G,GND	GROUND
LED	LIGHT EMITTING DIODE
LTG	LIGHTING
MB	MAIN BREAKER
MH	MOUNTING HEIGHT, METAL HALIDE
MIN	MINIMUM
MTD	MOUNTED
NEC	NATIONAL ELECTRICAL CODE
O.C.	ON CENTER
P	POLE
RGS	RIGID GALVANIZED STEEL
SER	SERVICE ENTRANCE RATED
SPD	SURGE PROTECTIVE DEVICE
TYP	TYPICAL
UNO	UNLESS NOTED OTHERWISE
UTIL	UTILITY
V	VOLTS, VOLTAGE
VUSBC	VIRGINIA UNIFORM STATE BUILDING CODE
W	WIRE
WP	WEATHERPROOF
XFMR	TRANSFORMER
ø	PHASE

COMMONWEALTH OF VIRGINIA
ADRIENNE MARIE HENDRICKSON
NO. 33370
PROFESSIONAL ENGINEER

Draper Aden Associates
Engineering • Surveying • Environmental Services
Blacksburg, VA
Richmond, VA
Hampton Roads, VA
Charlottesville, VA
700 Harris Street, Suite E
Charlottesville, VA 22903
434-295-0700 Fax: 434-295-2105
www.daa.com

LEGEND, DETAILS - PHASE 1

RAMBLEWOOD PARK IMPROVEMENTS

RAMBLEWOOD PARK, HARRISONBURG, VIRGINIA

REVISIONS

DESIGNED BY:	SAH
DRAWN BY:	BJP
CHECKED BY:	AMH
SCALE:	AS SHOWN
DATE:	MAY 10, 2013
PROJECT NUMBER:	06154-192CV

2rw
2rw Consultants, Inc.
100 10th Street N.E., Ste. 202
Charlottesville, VA 22902
434.296.2116

E0.0

PANELBOARD MP1

LOCATION: ELEC ROOM | VOLTS: 277/480 | 300A MAIN BRKR, SE RATED
MOUNTING: SURF | PHASE: 3 | KAIC: 22
MAINS AMPS: 400 | SERVICE 1 OF 2

LOAD SERVED	WIRE SIZE	GND SIZE	CND SIZE	CKT BRKR	CKT NO.	KVA / PHASE A	KVA / PHASE B	KVA / PHASE C	CKT NO.	CKT BRKR	CND SIZE	GND SIZE	WIRE SIZE	LOAD SERVED
POLE A1 (NOTE 2)	12	12	3/4"	15	1	2.0 4.8			2	25	3/4"	10	10	POLE B2 (NOTE 2)
					3		2.0 4.8		4					
					5			2.0 4.8	6					
POLE A2 (NOTE 2)	12	12	3/4"	15	7	2.0 4.8			8	25	3/4"	10	10	POLE B3 (NOTE 3)
					9		2.0 4.8		10					
					11			2.0 4.8	12					
POLE A3 (NOTE 3)	12	12	3/4"	15	13	2.0 4.8			14	25	3/4"	10	10	POLE B4 (NOTE 3)
					15		2.0 4.8		16					
					17			2.0 4.8	18					
POLE A4 (NOTE 3)	12	12	3/4"	15	19	2.0 4.8			20	25	3/4"	10	10	POLE B5 (NOTE 3)
					21		2.0 4.8		22					
					23			2.0 4.8	24					
POLE A5 (NOTE 3)	12	12	3/4"	15	25	2.0 4.8			26	25	3/4"	10	10	POLE B6 (NOTE 3)
					27		2.0 4.8		28					
					29			2.0 4.8	30					
POLE A6 (NOTE 3)	12	12	3/4"	15	31	2.0 4.8			32	25	3/4"	10	10	POLE B7 (NOTE 2)
					33		2.0 4.8		34					
					35			2.0 4.8	36					
POLE A7 (NOTE 2)	12	12	3/4"	15	37	2.0 4.8			38	25	3/4"	10	10	POLE B8 (NOTE 2)
					39		2.0 4.8		40					
					41			2.0 4.8	42					
POLE A8 (NOTE 2)	12	12	3/4"	15	43	2.0 4.8			44	25	3/4"	10	10	POLE S1 (NOTE 3)
					45		2.0 4.8		46					
					47			2.0 4.8	48					
POLE B1 (NOTE 2)	10	10	3/4"	25	49	4.8 4.8			50	25	3/4"	10	10	POLE S2 (NOTE 2)
					51		4.8 4.8		52					
					53			4.8 4.8	54					
						64.6	64.6	64.6						

KVA TTL= 193.8
VOLTAGE: 480 0.831
CONNECTED AMPS: 233
DEMAND FACTOR 1.0
DEMAND AMPS: 233

NOTES:
1. UNLESS NOTED OTHERWISE, ALL BRANCH CKTS SHALL BE #12 AWG, #12 GND, 3/4" CND, 20A-1P CKT BRKR.
2. SEE FIELD POLE LIGHTING SCHEDULE FOR CND AND WIRE FROM CONTACTOR TO POLES.
3. PROVIDE PULL STRING IN CND TO OUTDOOR BOX FROM CONTACTOR CABINET. CKT PROVIDED IN PHASE 2.

PANELBOARD MP2

LOCATION: ELEC ROOM | VOLTS: 277/480 | 300A MAIN BRKR, SE RATED
MOUNTING: SURF | PHASE: 3 | KAIC: 22
MAINS AMPS: 400 | SERVICE 2 OF 2

LOAD SERVED	WIRE SIZE	GND SIZE	CND SIZE	CKT BRKR	CKT NO.	KVA / PHASE A	KVA / PHASE B	KVA / PHASE C	CKT NO.	CKT BRKR	CND SIZE	GND SIZE	WIRE SIZE	LOAD SERVED
POLE C1 (NOTE 2)	12	12	3/4"	20	1	3.4			2	30				SPARE
					3		3.4		4					
					5			3.4	6					
POLE C2 (NOTE 2)	12	12	3/4"	20	7	3.4			8	30				SPARE
					9		3.4		10					
					11			3.4	12					
POLE C3 (NOTE 3)	12	12	3/4"	20	13	3.4			14	30				SPARE
					15		3.4		16					
					17			3.4	18					
POLE C4 (NOTE 3)	12	12	3/4"	20	19	3.4			20	30				SPARE
					21		3.4		22					
					23			3.4	24					
POLE C5 (NOTE 3)	12	12	3/4"	20	25	3.4			26					SPARE
					27		3.4		28					SPARE
					29			3.4	30					SPARE
POLE C6 (NOTE 3)	12	12	3/4"	15	31	2.7			32					SPARE
					33		2.7		34					SPARE
					35			2.7	36					SPARE
POLE C7 (NOTE 2)	12	12	3/4"	20	37	3.4			38					SPARE
					39		3.4		40					SPARE
					41			3.4 1.4	42	20	1"	8	8	PARKING LOT LIGHTS
POLE C8 (NOTE 2)	12	12	3/4"	15	43	2.7			44	25	1.1/2"	2	2	PANEL LM VIA XFMR T2
					45		2.7		46					(15 KVA 3-PHASE)
					47			2.7	48					(NOTE 4)
SPARE				20	49	5.7			50	70	1.1/2"	6	1	PANEL LP VIA XFMR T1
					51		5.4		52					(45 KVA 3-PHASE)
					53			6.3	54					(NOTE 4)
						31.8	31.5	33.8						

KVA TTL= 97.1
VOLTAGE: 480 0.831
CONNECTED AMPS: 117
DEMAND FACTOR 1.0
DEMAND AMPS: 117

NOTES:
1. UNLESS NOTED OTHERWISE, ALL BRANCH CKTS SHALL BE #12 AWG, #12 GND, 3/4" CND, 20A-1P CKT BRKR.
2. SEE FIELD POLE LIGHTING SCHEDULE FOR CND AND WIRE FROM CONTACTOR TO POLES.
3. PROVIDE PULL STRING IN CND TO OUTDOOR BOX FROM CONTACTOR CABINET. CKT PROVIDED IN PHASE 2.
4. PANEL AND TRANSFORMER PROVIDED BY ELECTRICAL CONTRACTOR.

FIELD LIGHTING POLE SCHEDULE

POLE ID	CIRCUIT DESCRIPTION	MTG HT ABV FIELD	# OF FIXTURES	FULL LOAD AMPS	BRANCH CIRCUIT	CONTACTOR SIZE(AMPS)	CONTACTOR ID	ZONE
A1	BB FIELD 4	60'	3	7.4	3#12,1#12,1"C	30	C1	F4
A2	BB FIELD 4	60'	3	7.4	3#12,1#12,1"C	30	C2	F4
A3-FUT	BB FIELD 3	60'	3	7.4	3#12,1#12,1"C	30	C3	F3
A4-FUT	BB FIELD 3	60'	3	7.4	3#12,1#12,1"C	30	C4	F3
A5-FUT	BB FIELD 2	60'	3	7.4	3#10,1#10,1"C	30	C5	F2
A6-FUT	BB FIELD 2	60'	3	7.4	3#12,1#12,1"C	30	C6	F2
A7	BB FIELD 1	60'	3	7.4	3#10,1#10,1"C	30	C7	F1
A8	BB FIELD 1	60'	3	7.4	3#8,1#8,1.1/4"C	30	C8	F1
B1	BB FIELD 4	70'	7	17.3	3#10,1#10,1"C	30	C9	F4
B2	BB FIELD 4	70'	7	17.3	3#10,1#10,1"C	30	C10	F4
B3-FUT	BB FIELD 3	70'	7	17.3	3#8,1#8,1.1/4"C	30	C11	F3
B4-FUT	BB FIELD 3	70'	7	17.3	3#8,1#8,1.1/4"C	30	C12	F3
B5-FUT	BB FIELD 2	70'	7	17.3	3#6,1#6,1.1/4"C	30	C13	F2
B6-FUT	BB FIELD 2	70'	7	17.3	3#10,1#10,1"C	30	C14	F2,S1
B7	BB FIELD 1	70'	7	17.3	3#6,1#6,1.1/4"C	30	C15	F1
B8	BB FIELD 1	70'	7	17.3	3#4,1#4,1.1/2"C	30	C16	F1,S1
C1	BB FIELD 4	60'	5	12.4	3#8,1#8,1.1/4"C	30	C17	F4
C2	BB FIELD 4	60'	5	12.4	3#10,1#10,1"C	30	C18	F4
C3-FUT	BB FIELD 3	60'	5	12.4	3#6,1#6,1.1/4"C	30	C19	F3
C4-FUT	BB FIELD 3	60'	5	12.4	3#6,1#6,1.1/4"C	30	C20	F3
C5-FUT	BB FIELD 2	70'	5	12.4	3#6,1#6,1.1/4"C	30	C21	F2,S1
C6-FUT	BB FIELD 2	70'	4	9.9	3#12,1#12,1"C	30	C22	F2,S1
C7	BB FIELD 1	70'	5	12.4	3#10,1#10,1"C	30	C23	F1,S1
C8	BB FIELD 1	70'	4	9.9	3#6,1#6,1.1/4"C	30	C24	F1,S1
S1-FUT	SOCCER 1	70'	7	17.3	3#4,1#4,1.1/2"C	30	C25	F2,S1
S2	SOCCER 1	70'	7	17.3	3#10,1#10,1"C	30	C26	F1,S1
S3-FUT	SOCCER 2	80'	8	19.7	2"C	30	C27	S2
S4-FUT	SOCCER 2	70'	8	19.7	2"C	30	C28	S2
S5-FUT	SOCCER 2	70'	8	19.7	2"C	30	C29	S2
S6-FUT	SOCCER 2	70'	8	19.7	2"C	30	C30	S2

NOTE 1: CONTACTORS ARE 100% RATED.
NOTE 2: -FUT = FUTURE POLE IN PHASE 2 WORK OR AT SOCCER FIELD 2. PROVIDE CND AND PULL STRING FROM BLDG TO EXTERIOR PULL BOX. PROVIDE COMPLETED CKT IN PHASE 2 WORK OR AT SOCCER FIELD 2.

LIGHTING FIXTURE SCHEDULE

MARK	IMAGE	DESCRIPTION	MFR/MODEL (BASIS OF DESIGN)	MTG	LAMPS NO.	LAMPS TYPE	REMARKS
SL1		LED POLE FIXTURE, CAST ALUMINUM HOUSING, TYPE III LIGHTING DISTRIBUTION, BLACK COLOR. 4" SQUARE POLE, 20' MOUNTING HEIGHT. UL WET LOCATION LISTED.	BETA LED ARE EDG 3M DA 12 D UL 350 43K	P	–	LED	277V
SL2		LED POLE FIXTURE, CAST ALUMINUM HOUSING, TYPE V LIGHTING DISTRIBUTION, BLACK COLOR. 4" SQUARE POLE, 20' MOUNTING HEIGHT. UL WET LOCATION LISTED.	BETA LED ARE EDG 5M DA 12 D UL 350 43K	P	–	LED	277V
SL3		LED POLE TOP FIXTURE, CAST ALUMINUM HOUSING, TYPE III LIGHTING DISTRIBUTION, SPIDER MOUNT ON 4" SQUARE POLE, 12' MOUNTING HEIGHT. UL WET LOCATION LISTED.	BETA LED ARE EDG 3M R4 12 D UL 350 40K	P	–	LED	
W1		EXTERIOR LED WALL PACK. CAST ALUMINUM, WEATHER-TIGHT LED DRIVER, IP66 RATED ENCLOSURE, EPOXY PRIMER WITH POWDER TOPCOAT FINISH, CORROSION RESISTANT. 4000K COLOR TEMP LED. BLACK COLOR. UL WET LOCATION LISTED.	BETA LED SEC EDG 3M WM 04 D UL	S/W	–	LED	
W2.2	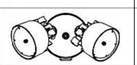	LED FLOOD LIGHT WITH PHOTOCELL, CAST ALUMINUM, CORROSION-RESISTANT BRONZE HOUSING, CLEAR ACRYLIC LENSES ARE FULLY GASKETED, UL LISTED.	LITHONIA 0FLR 6LC 120 P BZ	S/W	2	LED	

BASIS OF DESIGN STATEMENT:
THE DESIGN SHOWN IS BASED ON THE MANUFACTURERS AND MODELS INDICATED AND IS INTEDED ONLY TO SHOW THE GENERAL SIZE, CONFIGURATION, LOCATION, CONNECTIONS AND/OR SUPPORT FOR THE EQUIPMENT OR SYSTEMS SPECIFIED WITH RELATION TO THE OTHER BUILDING SYSTEMS.

KEY:
P POLE
S/C SURFACE/CEILING
S/W SURFACE/WALL

NOTES:
1. ALL FLUORESCENT FIXTURES SHALL HAVE ELECTRONIC BALLASTS.
2. ALL FIXTURES SHALL BE RATED 120V, UNLESS NOTED OTHERWISE.
3. ALL FLUORESCENT LAMPS SHALL HAVE COLOR TEMP. RATING OF 3500K WITH MINIMUM CRI RATING OF 82.
4. ALL FIXTURES SHALL BE PROVIDED COMPLETE WITH ALL NECESSARY ACCESSORIES.

PANELBOARD LP

LOCATION: ELEC ROOM | VOLTS: 120/208 | 125A MAIN BREAKER
MOUNTING: SURF | PHASE: 3 | KAIC: 10
MAINS AMPS: 125

LOAD SERVED	WIRE SIZE	GND SIZE	CND SIZE	CKT BRKR	CKT NO.	KVA / PHASE A	KVA / PHASE B	KVA / PHASE C	CKT NO.	CKT BRKR	CND SIZE	GND SIZE	WIRE SIZE	LOAD SERVED
REC ELEC ROOM					1	0.4 0.8			2					LTS ELEC ROOM
PRESSBOX					3		0.8 0.3		4					EMER
PRESSBOX					5			0.8 0.5	6					MUSCO CONTROLS
HAND DRYER					7	1.8 0.2			8					EXHAUST FANS - RESTROOMS
HAND DRYER					9		1.8		10					SPARE
SPARE					11				12					SPARE
SPARE					13				14					SPARE
SPARE					15				16					SPARE
SPARE					17				18					SPARE
SPARE					19				20					SPARE
SPARE					21				22					SPARE
HEATER	10	10	3/4"	30	23			2.5	24					SPARE
					25	2.5			26					SPARE
HVAC PRESSBOX	10	10	3/4"	30	27		2.5		28					SPARE
					29			2.5	30					SPARE
						5.7	5.4	6.3						

KVA TTL= 17.4
VOLTAGE: 208 0.360
CONNECTED AMPS: 48
DEMAND FACTOR 0.7
DEMAND AMPS: 34

NOTES:
1. UNLESS NOTED OTHERWISE, ALL BRANCH CKTS SHALL BE #12 AWG, #12 GND, 3/4" CND, 20A-1P CKT BRKR.
2. ALL CKTS AND DEVICES ARE ESTIMATED. COORD WITH BLDG AND EQPT PROVIDED.
3. ELECTRICAL CONTRACTOR TO PROVIDE LP PANEL AND 45KVA XFMR FOR PANEL.

PANELBOARD LM

LOCATION: MAINT BLDG | VOLTS: 120/208 | 50A MAIN BREAKER
MOUNTING: SURF | PHASE: 3 | KAIC: 10
MAINS AMPS: 100

LOAD SERVED	WIRE SIZE	GND SIZE	CND SIZE	CKT BRKR	CKT NO.	KVA / PHASE A	KVA / PHASE B	KVA / PHASE C	CKT NO.	CKT BRKR	CND SIZE	GND SIZE	WIRE SIZE	LOAD SERVED
REC MAINT BLDG					1	0.8 0.5			2					LTS INTERIOR
MAINT BLDG					3		0.8 0.3		4					EXTERIOR
MAINT BLDG					5			0.8	6					SPARE
SPARE					7				8					SPARE
SPARE					9				10					SPARE
SPARE					11				12					SPARE
SPARE					13				14					SPARE
UH-1	12	12	3/4"	15	15		1.0		16					SPARE
					17			1.0	18					SPARE
UH-2	12	12	3/4"	15	19	1.0			20					SPARE
					21		1.0		22					SPARE
UH-3	12	12	3/4"	15	23			1.0	24					SPARE
					25	1.0			26					SPARE
UH-4	12	12	3/4"	15	27		1.0		28					SPARE
					29			1.0	30					SPARE
						3.3	4.1	3.8						

KVA TTL= 11.2
VOLTAGE: 208 0.360
CONNECTED AMPS: 31
DEMAND FACTOR 0.7
DEMAND AMPS: 22

NOTES:
1. UNLESS NOTED OTHERWISE, ALL BRANCH CKTS SHALL BE #12 AWG, #12 GND, 3/4" CND, 20A-1P CKT BRKR.
2. ALL CKTS AND DEVICES ARE ESTIMATED. COORD WITH BLDG AND EQPT PROVIDED.
3. ELECTRICAL CONTRACTOR TO PROVIDE LM PANEL, 15KVA XFMR FOR PANEL, AND EXTERIOR LIGHT FIXTURES.

COMMONWEALTH OF VIRGINIA
ADRIENNE MARIE HENDRICKSON
NO. 33370
PROFESSIONAL ENGINEER

Draper Aden Associates
Engineering • Surveying • Environmental Services
Blacksburg, VA
Richmond, VA
Hampton Roads, VA
Charlottesville, VA
700 Harris Street, Suite E
Charlottesville, VA 22903
434-295-0700 Fax: 434-295-2105
www.daa.com

SCHEDULES - PHASE 1

RAMBLEWOOD PARK IMPROVEMENTS
RAMBLEWOOD PARK, HARRISONBURG, VIRGINIA

REVISIONS

DESIGNED BY:	SAH
DRAWN BY:	BJP
CHECKED BY:	AMH
SCALE:	AS SHOWN
DATE:	MAY 10, 2013
PROJECT NUMBER:	06154-192CV

2rw Consultants, Inc.
100 10th Street N.E., Ste. 202
Charlottesville, VA 22902
434.296.2116

E0.1

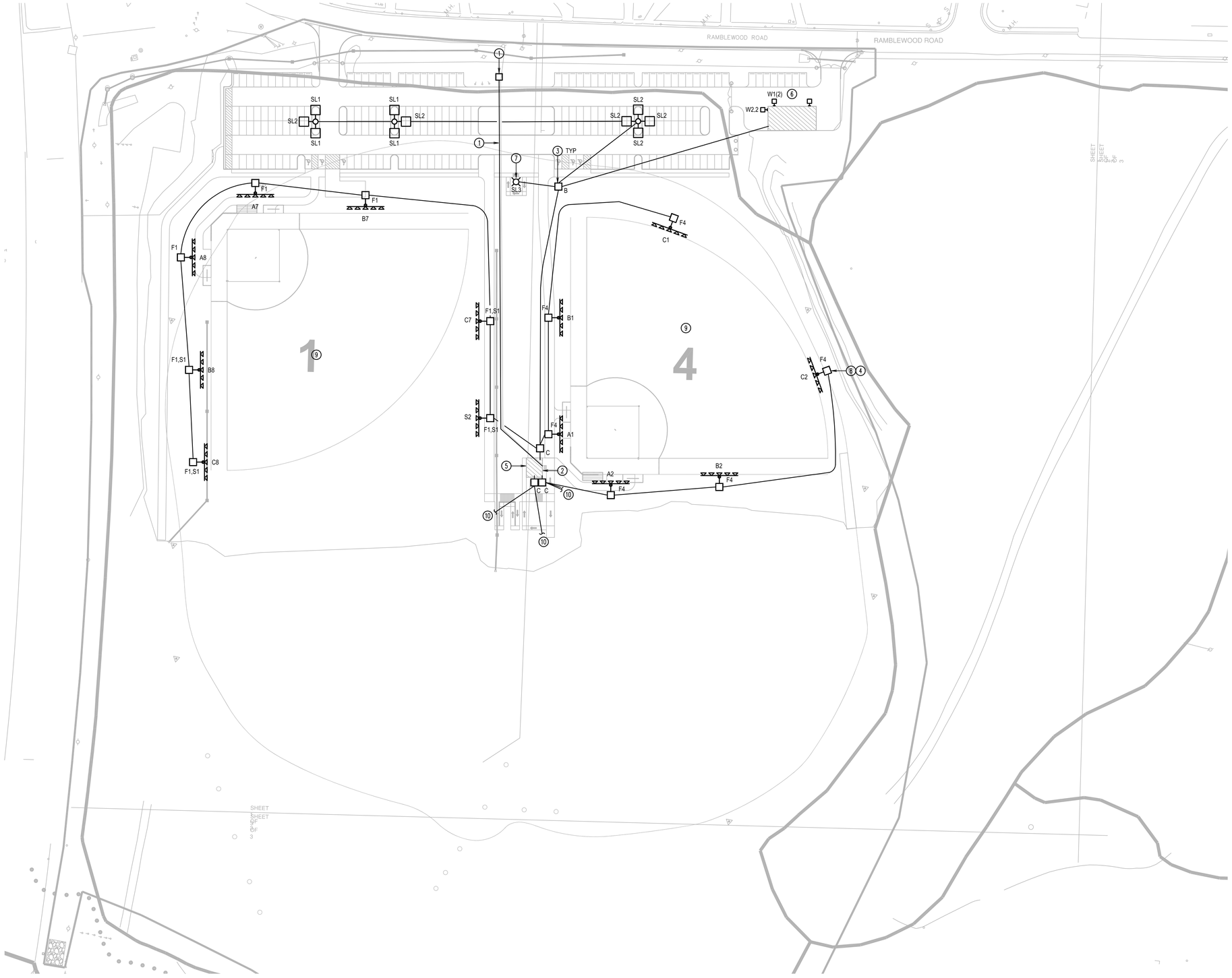

1 E1.0 PLAN

SCALE: 1" = 60'

KEY NOTES

1. COORDINATE XFMR SIZE AND PAD WITH UTILITY. EC TO PROVIDE XFMR PAD AND ALUMINUM SERVICE CONDUCTORS. COORDINATE SERVICE WITH UTILITY. SEE RISER DIAGRAM.
2. APPROX. LOCATION FOR NEW METER. COORDINATE INSTALLATION WITH UTILITY.
3. IN-GROUND PULL BOX. SEE DETAIL 3/E0.0 AND HANDHOLE SCHEDULE. SUBSCRIPT INDICATES SIZE/TYPE.
4. EACH FIELD POLE TO HAVE ITS OWN CKT CND. SEE FIELD LIGHTING POLE SCHEDULE ON E0.1.
5. DOOR TO ELECTRICAL ROOM. SEE RISER DIAGRAM FOR ELECTRICAL EQUIPMENT IN ELECTRICAL ROOM AND FOR METER LOCATION. ALL ELECTRICAL EQPT IN RISER DIAGRAM TO BE PROVIDED BY EC. COORD ROUGH-IN OF PANEL LP AND XFMR T2 WITH BLDG CONTRACTOR. GND ELEC SERVICE TO BLDG PER NEC ARTICLE 250.
6. COORD ROUGH-IN OF EXTERIOR FIXTURES, PANEL LM, AND XFMR T2 WITH BLDG CONTRACTOR AND OWNER. COORD LIGHTING CONTROLS WITH OWNER. GND ELEC SERVICE TO BLDG PER NEC ARTICLE 250.
7. LIGHT FIXTURE IS ON EMERGENCY LIGHTING INVERTER WITH OTHER W2.2 LIGHT FIXTURES ON THE PRESSBOX BLDG. SEE BLDG DESIGN. SEE DETAIL 1/E0.0 FOR THIS 12' POLE. PROVIDE LIGHTING INVERTER AND COORDINATE WITH BUILDING CONTRACTOR. BASIS OF DESIGN FOR LIGHTING INVERTER: IOTA ENGINEERING IIS375I (375W).
8. NOMENCLATURE IS AS FOLLOWS: C2 IDENTIFIES THE POLE, AND F4 IDENTIFIES THE ZONE. THE HANDHOLE AT THE POLE IS "A" TYPE. COORDINATE LOCATION OF HANDHOLE WITH FIELD LIGHTING POLE BASE, SIDEWALK AREAS, AND LANDSCAPING. THIS IS TYPICAL FOR ALL FIELD LIGHTING POLES, UNO.
9. DO NOT RUN CONDUITS UNDER FIELD SURFACES.
10. CND OR CNDS WITH PULL STRING TO EXTEND FROM BOX TO BEYOND CONCRETE WALKWAYS. SEE PHASE 2 WORK FOR CONTINUATION.

COMMONWEALTH OF VIRGINIA
ADRIENNE MARIE HENDRICKSON
NO. 33370
PROFESSIONAL ENGINEER

Draper Aden Associates
Engineering • Surveying • Environmental Services
Blacksburg, VA
Richmond, VA
Hampton Roads, VA
Charlottesville, VA
700 Harris Street, Suite E
Charlottesville, VA 22903
434-295-0700 Fax: 434-295-2105
www.daa.com

ELECTRICAL SITE PLAN - PHASE 1

RAMBLEWOOD PARK IMPROVEMENTS

RAMBLEWOOD PARK, HARRISONBURG, VIRGINIA

REVISIONS

DESIGNED BY:	SAH
DRAWN BY:	BJP
CHECKED BY:	AMH
SCALE:	AS SHOWN
DATE:	MAY 10, 2013
PROJECT NUMBER:	06154-192CV

E1.0

2rw
2rw Consultants, Inc.
100 10th Street N.E., Ste. 202
Charlottesville, VA 22902
434.296.2116

O:\DraperAden\13109 - Rambleewood\B_Design\E_Dwg\Dwg\3109-E.dwg May 10, 2013 1:27:18 PM

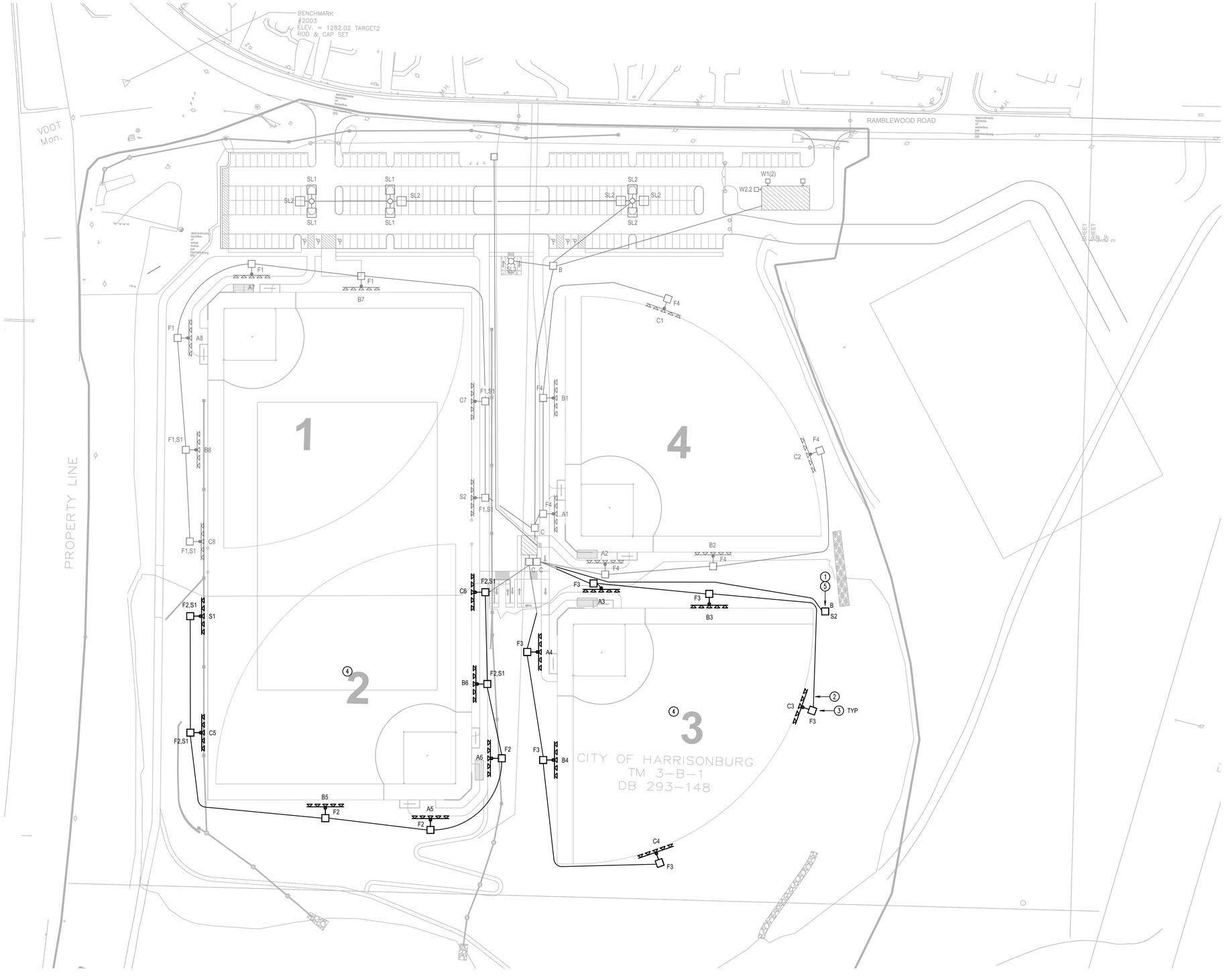

1 | E1.1

PLAN

SCALE: 1" = 60'

KEY NOTES

1. IN-GROUND PULL BOX. SEE DETAIL 3/E0.0 AND HANDHOLE SCHEDULE. SUBSCRIPT INDICATES SIZE/TYPE.
2. EACH FIELD POLE TO HAVE ITS OWN CKT CND. SEE FIELD LIGHTING POLE SCHEDULE ON E0.1.
3. NOMENCLATURE IS AS FOLLOWS: C3 IDENTIFIES THE POLE, AND F3 IDENTIFIES THE ZONE. THE HANDHOLE AT THE POLE IS "A" TYPE. COORDINATE LOCATION OF HANDHOLE WITH FIELD LIGHTING POLE BASE, SIDEWALK AREAS, AND LANDSCAPING. THIS IS TYPICAL FOR ALL FIELD LIGHTING POLES, UNO.
4. DO NOT RUN CONDUITS UNDER FIELD SURFACES.
5. PROVIDE BOX AND (4) 2" CNDS WITH PULL STRING TO CONTACTORS FOR (FUTURE) POLES S3, S4, S5, AND S6.

COMMONWEALTH OF VIRGINIA
ADRIENNE MARIE HENDRICKSON
NO. 33370
PROFESSIONAL ENGINEER

Draper Aden Associates
Engineering • Surveying • Environmental Services
Blacksburg, VA
Richmond, VA
Hampton Roads, VA
Charlottesville, VA
700 Harris Street, Suite E
Charlottesville, VA 22903
434-295-0700 Fax: 434-295-6105
www.daa.com

ELECTRICAL SITE PLAN - PHASE 2

RAMBLEWOOD PARK IMPROVEMENTS

RAMBLEWOOD PARK, HARRISONBURG, VIRGINIA

REVISIONS

DESIGNED BY:	SAH
DRAWN BY:	BJP
CHECKED BY:	AMH
SCALE:	AS SHOWN
DATE:	MAY 10, 2013
PROJECT NUMBER:	06154-192CV

E1.1

2rw
2rw Consultants, Inc.
100 10th Street N.E., Ste. 202
Charlottesville, VA 22902
434.296.2116

O:\DraperAden\13109 - Ramblewood\B_Design\E_Dwg\2rw\13109-E.dwg May 10, 2013 1:27:33 PM

EQUIPMENT LIST FOR AREAS SHOWN

Pole				Luminaires				
QTY	LOCATION	SIZE	GRADE ELEVATION	MOUNTING HEIGHT	LAMP TYPE	QTY / POLE	THIS GRID	OTHER GRIDS
2	A1-A2	60'	-	60'	1500W MZ	3	3	0
2	B1-B2	70'	-	70'	1500W MZ	7	7	0
2	C1-C2	60'	-	60'	1500W MZ	5	5	0
6	TOTALS					30	30	0

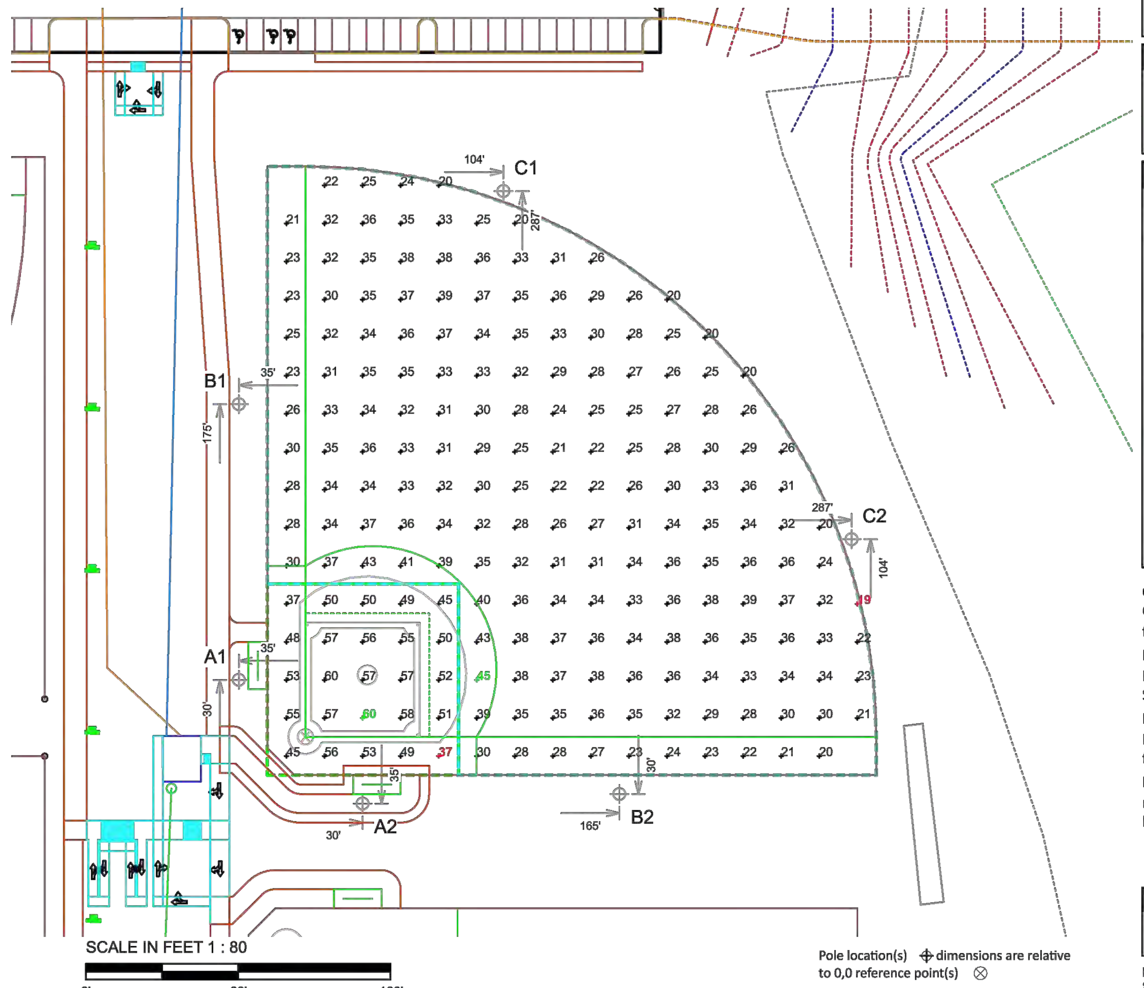

MY PROJECT

Name: Ramblewood Park Baseball And Soccer
Location: Harrisonburg,VA

GRID SUMMARY

Name: Field #4
Size: 300'/300'/300' - basepath 60'
Spacing: 20.0' x 20.0'
Height: 3.0' above grade

CONSTANT ILLUMINATION

SUMMARY	Infield	Outfield
	HORIZONTAL FOOTCANDLES	
Guaranteed Average:	50	30
Scan Average:	51.88	30.96
Maximum:	60	45
Minimum:	37	19
Avg / Min:	1.40	1.63
Guaranteed Max / Min:	2	2.5
Max / Min:	1.63	2.38
UG (adjacent pts):	1.37	1.66
CV:	0.12	0.18
No. of Points:	25	181

LUMINAIRE INFORMATION

Luminaire Type:	Green Generation
Rated Lamp Life:	5,000 hours
Avg Lumens / Lamp:	134,000
Avg Lamp Tilt Factor:	1.000
No. of Luminaires:	30
Avg KW:	46.92 (51.0 max)

Guaranteed Performance: The Guaranteed Average CONSTANT ILLUMINATION described above is guaranteed for the rated life of the lamp.

Field Measurements: Illumination measured in accordance with IESNA LM-5-04 and CIBSE LG4. Individual values may vary. See the Warranty document for details.

Electrical System Requirements: Refer to Amperage Draw Chart and/or the **"Musco Control System Summary"** for electrical sizing.

Installation Requirements: Results assume +/- 3% nominal voltage at line side of the ballast and structures located within 3 feet (1m) of design locations.

ENGINEERED DESIGN

By: Ben Drost
File # / Date: 157918a 08-May-13

Not to be reproduced in whole or part without the written consent of Musco Sports Lighting, LLC. ©1981, 2013 Musco Sports Lighting, LLC.

ILLUMINATION SUMMARY

EQUIPMENT LIST FOR AREAS SHOWN

Pole				Luminaires				
QTY	LOCATION	SIZE	GRADE ELEVATION	MOUNTING HEIGHT	LAMP TYPE	QTY / POLE	THIS GRID	OTHER GRIDS
2	A3-A4	60'	-	60'	1500W MZ	3	3	0
2	B3-B4	70'	-	70'	1500W MZ	7	7	0
2	C3-C4	60'	-	60'	1500W MZ	5	5	0
6	TOTALS					30	30	0

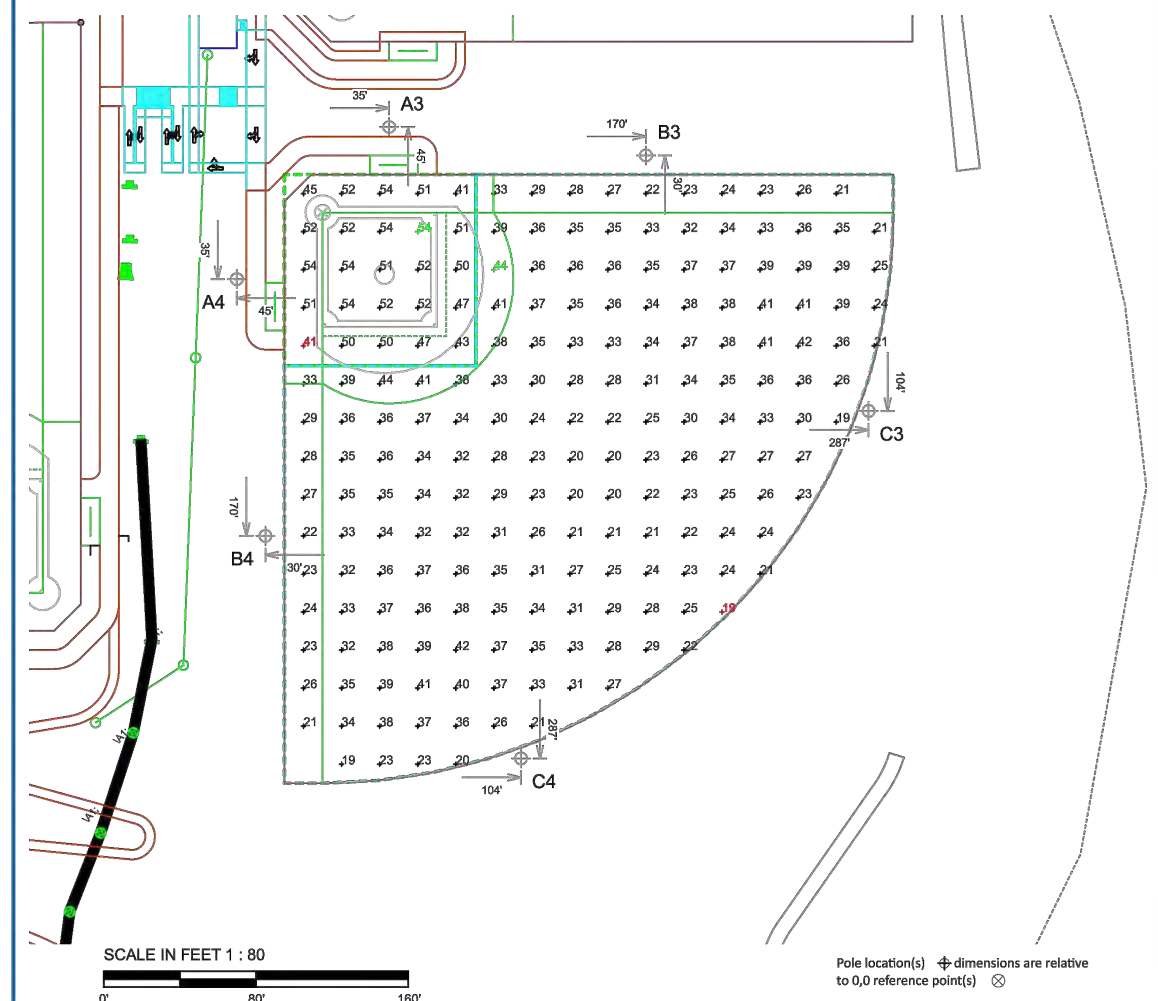

MY PROJECT

Name: Ramblewood Park Baseball And Soccer
Location: Harrisonburg,VA

GRID SUMMARY

Name: Field #3
Size: 300'/300'/300' - basepath 60'
Spacing: 20.0' x 20.0'
Height: 3.0' above grade

CONSTANT ILLUMINATION

SUMMARY	Infield	Outfield
	HORIZONTAL FOOTCANDLES	
Guaranteed Average:	50	30
Scan Average:	50.23	30.85
Maximum:	54	44
Minimum:	41	19
Avg / Min:	1.23	1.67
Guaranteed Max / Min:	2	2.5
Max / Min:	1.32	2.37
UG (adjacent pts):	1.24	1.79
CV:	0.08	0.21
No. of Points:	25	181

LUMINAIRE INFORMATION

Luminaire Type:	Green Generation
Rated Lamp Life:	5,000 hours
Avg Lumens / Lamp:	134,000
Avg Lamp Tilt Factor:	1.000
No. of Luminaires:	30
Avg KW:	46.92 (51.0 max)

Guaranteed Performance: The Guaranteed Average CONSTANT ILLUMINATION described above is guaranteed for the rated life of the lamp.

Field Measurements: Illumination measured in accordance with IESNA LM-5-04 and CIBSE LG4. Individual values may vary. See the Warranty document for details.

Electrical System Requirements: Refer to Amperage Draw Chart and/or the **"Musco Control System Summary"** for electrical sizing.

Installation Requirements: Results assume +/- 3% nominal voltage at line side of the ballast and structures located within 3 feet (1m) of design locations.

ENGINEERED DESIGN

By: Ben Drost
File # / Date: 157918a 08-May-13

Not to be reproduced in whole or part without the written consent of Musco Sports Lighting, LLC. ©1981, 2013 Musco Sports Lighting, LLC.

ILLUMINATION SUMMARY

EQUIPMENT LIST FOR AREAS SHOWN

Pole				Luminaires				
QTY	LOCATION	SIZE	GRADE ELEVATION	MOUNTING HEIGHT	LAMP TYPE	QTY / POLE	THIS GRID	OTHER GRIDS
2	A5-A6	60'	-	60'	1500W MZ	3	3	0
3	B5-B6, S1	70'	-	70'	1500W MZ	7	7	0
1	C5	70'	-	70'	1500W MZ	5	5	0
1	C6	70'	-	70'	1500W MZ	4	4	0
7	TOTALS					36	36	0

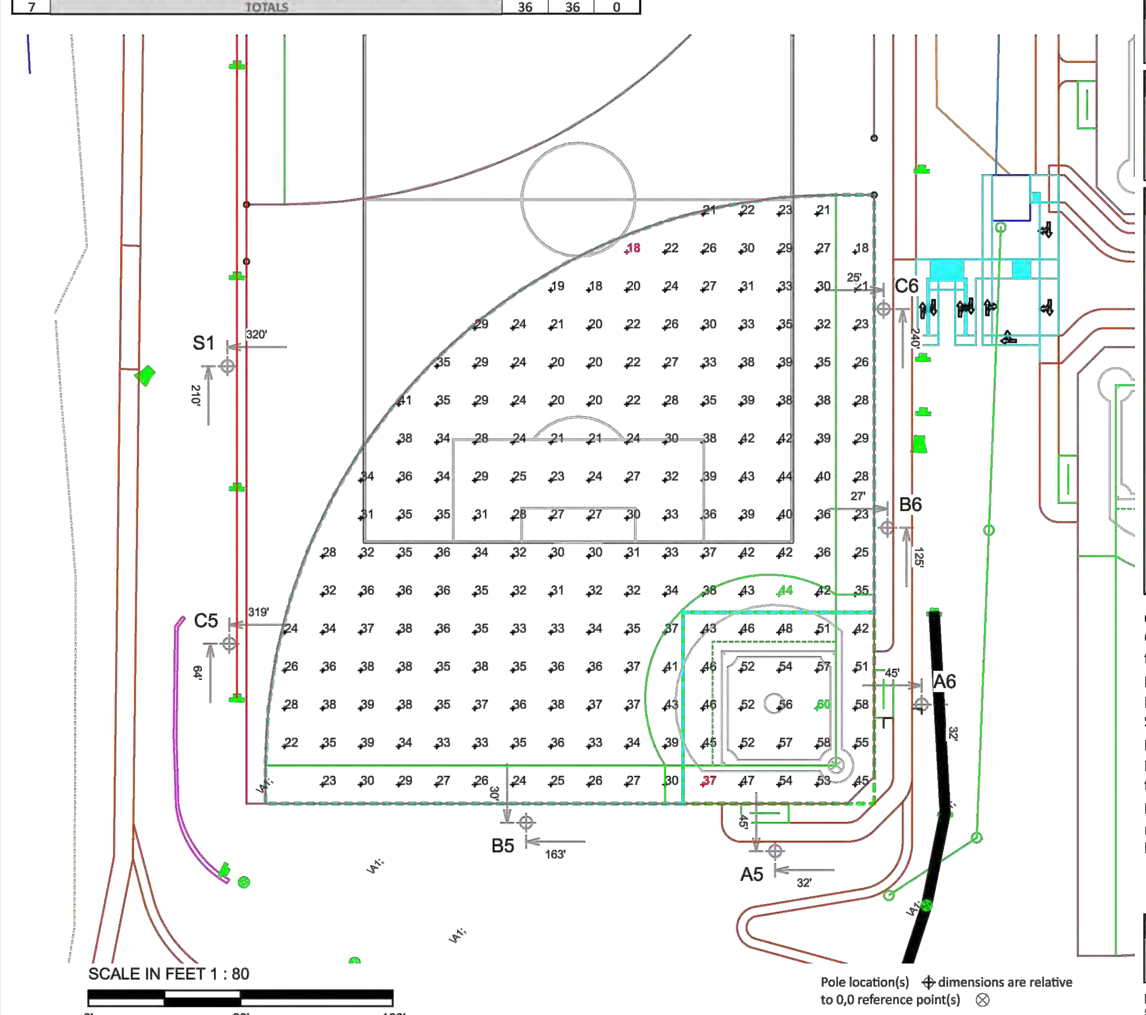

MY PROJECT

Name: Ramblewood Park Baseball And Soccer
Location: Harrisonburg,VA

GRID SUMMARY

Name: Field #2
Size: 300'/300'/300' - basepath 60'
Spacing: 20.0' x 20.0'
Height: 3.0' above grade

CONSTANT ILLUMINATION

SUMMARY	Infield	Outfield
	HORIZONTAL FOOTCANDLES	
Guaranteed Average:	50	30
Scan Average:	50.62	31.52
Maximum:	60	44
Minimum:	37	18
Avg / Min:	1.38	1.74
Guaranteed Max / Min:	2	2.5
Max / Min:	1.64	2.45
UG (adjacent pts):	1.30	1.59
CV:	0.12	0.21
No. of Points:	25	181

LUMINAIRE INFORMATION

Luminaire Type:	Green Generation
Rated Lamp Life:	5,000 hours
Avg Lumens / Lamp:	134,000
Avg Lamp Tilt Factor:	1.000
No. of Luminaires:	36
Avg KW:	56.3 (61.2 max)

Guaranteed Performance: The Guaranteed Average CONSTANT ILLUMINATION described above is guaranteed for the rated life of the lamp.

Field Measurements: Illumination measured in accordance with IESNA LM-5-04 and CIBSE LG4. Individual values may vary. See the Warranty document for details.

Electrical System Requirements: Refer to Amperage Draw Chart and/or the **"Musco Control System Summary"** for electrical sizing.

Installation Requirements: Results assume +/- 3% nominal voltage at line side of the ballast and structures located within 3 feet (1m) of design locations.

ENGINEERED DESIGN

By: Ben Drost
File # / Date: 157918a 08-May-13

Not to be reproduced in whole or part without the written consent of Musco Sports Lighting, LLC. ©1981, 2013 Musco Sports Lighting, LLC.

ILLUMINATION SUMMARY

EQUIPMENT LIST FOR AREAS SHOWN

Pole				Luminaires				
QTY	LOCATION	SIZE	GRADE ELEVATION	MOUNTING HEIGHT	LAMP TYPE	QTY / POLE	THIS GRID	OTHER GRIDS
2	A7-A8	60'	-	60'	1500W MZ	3	3	0
3	B7-B8, S2	70'	-	70'	1500W MZ	7	7	0
1	C7	70'	-	70'	1500W MZ	5	5	0
1	C8	70'	-	70'	1500W MZ	4	4	0
7	TOTALS					36	36	0

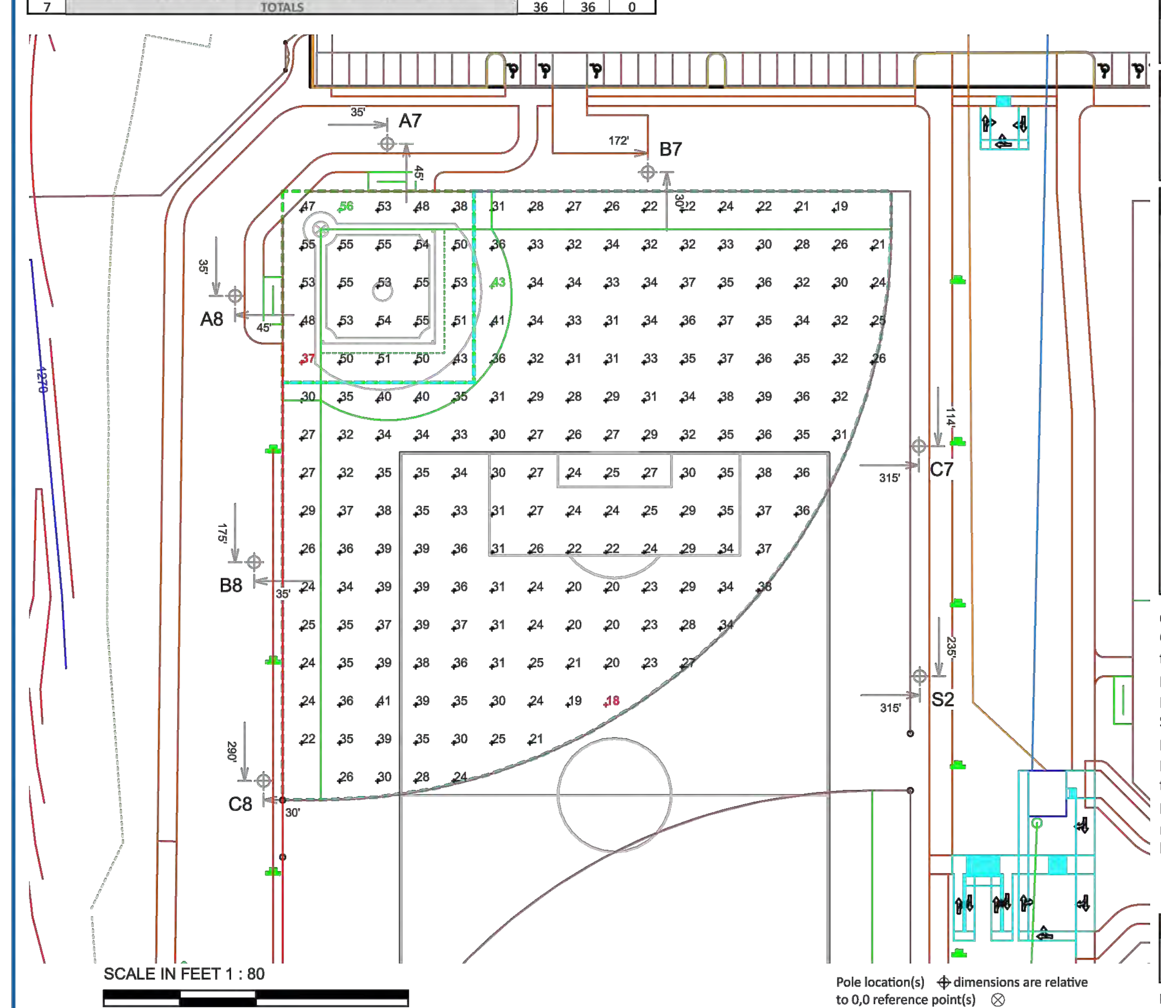

MY PROJECT

Name: Ramblewood Park Baseball And Soccer
Location: Harrisonburg,VA

GRID SUMMARY

Name: Field #1
Size: 300'/300'/300' - basepath 60'
Spacing: 20.0' x 20.0'
Height: 3.0' above grade

CONSTANT ILLUMINATION

SUMMARY	Infield	Outfield
	HORIZONTAL FOOTCANDLES	
Guaranteed Average:	50	30
Scan Average:	50.91	30.88
Maximum:	56	43
Minimum:	37	18
Avg / Min:	1.36	1.69
Guaranteed Max / Min:	2	2.5
Max / Min:	1.48	2.35
UG (adjacent pts):	1.32	1.58
CV:	0.10	0.18
No. of Points:	25	181

LUMINAIRE INFORMATION

Luminaire Type:	Green Generation
Rated Lamp Life:	5,000 hours
Avg Lumens / Lamp:	134,000
Avg Lamp Tilt Factor:	1.000
No. of Luminaires:	36
Avg KW:	56.3 (61.2 max)

Guaranteed Performance: The Guaranteed Average CONSTANT ILLUMINATION described above is guaranteed for the rated life of the lamp.

Field Measurements: Illumination measured in accordance with IESNA LM-5-04 and CIBSE LG4. Individual values may vary. See the Warranty document for details.

Electrical System Requirements: Refer to Amperage Draw Chart and/or the **"Musco Control System Summary"** for electrical sizing.

Installation Requirements: Results assume +/- 3% nominal voltage at line side of the ballast and structures located within 3 feet (1m) of design locations.

ENGINEERED DESIGN

By: Ben Drost
File # / Date: 157918a 08-May-13

Not to be reproduced in whole or part without the written consent of Musco Sports Lighting, LLC. ©1981, 2013 Musco Sports Lighting, LLC.

ILLUMINATION SUMMARY

Draper Aden Associates
Engineering • Surveying • Environmental Services
Blacksburg, VA
Richmond, VA
Hampton Roads, VA
Charlottesville, VA
700 Harris Street, Suite E
Charlottesville, VA 22903
434-295-0700 Fax: 434-295-2105
www.daa.com

ILLUMINATION SUMMARY - 1 OF 2

RAMBLEWOOD PARK IMPROVEMENTS

RAMBLEWOOD PARK, HARRISONBURG, VIRGINIA

REVISIONS

DESIGNED BY:	MUSCO
DRAWN BY:	
CHECKED BY:	
SCALE:	NO SCALE
DATE:	MAY 10, 2013
PROJECT NUMBER:	06154-192CV

E2.0

P:\06100\06154\06154-192CV\CAD\06154-192CV_DSN\6154-192CV-PHOTOMETRIC.dwg May 10, 2013 3:35:22 PM

EQUIPMENT LIST FOR AREAS SHOWN

Pole				Luminaires				
QTY	LOCATION	SIZE	GRADE ELEVATION	MOUNTING HEIGHT	LAMP TYPE	QTY / POLE	THIS GRID	OTHER GRIDS
4	B6, B8 S1-S2	70'	-	70'	1500W MZ	7	7	0
2	C5, C7	70'	-	70'	1500W MZ	5	5	0
2	C6, C8	70'	-	70'	1500W MZ	4	4	0
8	TOTALS					46	46	0

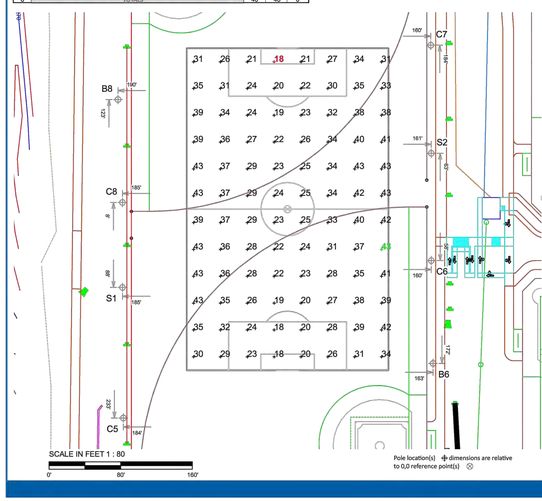

Pole location(s) dimensions are relative to 0,0 reference point(s)

MY PROJECT

Name: **Ramblewood Park Baseball And Soccer**
Location: Harrisonburg,VA

GRID SUMMARY

Name: Soccer #1
Size: 360' x 225'
Spacing: 30.0' x 30.0'
Height: 3.0' above grade

CONSTANT ILLUMINATION

SUMMARY	HORIZONTAL FOOTCANDLES
	Entire Grid
Guaranteed Average:	**30**
Scan Average:	31.17
Maximum:	43
Minimum:	18
Avg / Min:	1.74
Guaranteed Max / Min:	**3**
Max / Min:	2.43
UG (adjacent pts):	1.41
CV:	0.24
No. of Points:	96
LUMINAIRE INFORMATION	
Luminaire Type:	Green Generation
Rated Lamp Life:	5,000 hours
Avg Lumens / Lamp:	134,000
Avg Lamp Tilt Factor:	1.000
No. of Luminaires:	46
Avg KW:	71.94 (78.2 max)

Guaranteed Performance: The Guaranteed Average CONSTANT ILLUMINATION described above is guaranteed for the rated life of the lamp.

Field Measurements: Illumination measured in accordance with IESNA LM-5-04 and CIBSE LG4. Individual values may vary. See the Warranty document for details.

Electrical System Requirements: Refer to Amperage Draw Chart and/or the **"Musco Control System Summary"** for electrical sizing.

Installation Requirements: Results assume +/- 3% nominal voltage at line side of the ballast and structures located within 3 feet (1m) of design locations.

ENGINEERED DESIGN

By: **Ben Drost**
File # / Date: 157918a 08-May-13

Not to be reproduced in whole or part without the written consent of Musco Sports Lighting, LLC. ©1981, 2013 Musco Sports Lighting, LLC.

ILLUMINATION SUMMARY

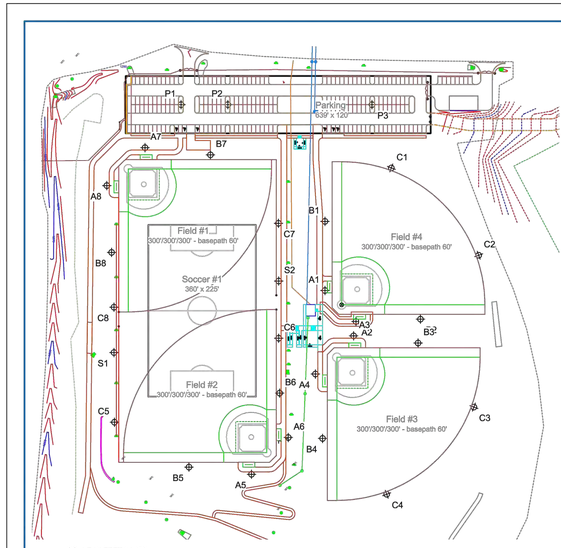

Pole location(s) dimensions are relative to 0,0 reference point(s)

MY PROJECT

Name: **Ramblewood Park Baseball And Soccer**
Location: Harrisonburg,VA

EQUIPMENT LAYOUT

INCLUDES:
- Field #1
- Field #2
- Field #3
- Field #4
- Parking
- Soccer #1

Electrical System Requirements: Refer to Amperage Draw Chart and/or the **"Musco Control System Summary"** for electrical sizing.

Installation Requirements: Results assume +/- 3% nominal voltage at line side of the ballast and structures located within 3 feet (1m) of design locations.

EQUIPMENT LIST FOR AREAS SHOWN

Pole				Luminaires		
QTY	LOCATION	SIZE	GRADE ELEVATION	MOUNTING HEIGHT	LAMP TYPE	QTY / POLE
8	A1-A8	60'	-	60'	1500W MZ	3
10	B1-B8 S1-S2	70'	-	70'	1500W MZ	7
4	C1-C4	60'	-	60'	1500W MZ	5
2	C5, C7	70'	-	70'	1500W MZ	5
2	C6, C8	70'	-	70'	1500W MZ	4
2	P1, P3	60'	-	60'	400W MH	3/3*
1	P2	60'	-	60'	400W MH	2/2*
29	TOTALS					148

* This structure utilizes a back-to-back mounting configuration

SINGLE LUMINAIRE AMPERAGE DRAW CHART

Ballast Specifications (.90 min power factor)	Line Amperage Per Luminaire (max draw)						
Single Phase Voltage	208 (60)	220 (50)	240 (60)	277 (50)	347 (60)	380 (50)	480 (60)
1500 watt MZ	8.6	8.3	7.5	6.5	5.1	4.7	3.7
400 watt MH	2.3	-	2.0	1.7	1.4	-	1.0

ENGINEERED DESIGN

By: **Ben Drost**
File # / Date: 157918a 08-May-13

Not to be reproduced in whole or part without the written consent of Musco Sports Lighting, LLC. ©1981, 2013 Musco Sports Lighting, LLC.

EQUIPMENT LAYOUT

EQUIPMENT LIST FOR AREAS SHOWN

Pole				Luminaires		
QTY	LOCATION	SIZE	GRADE ELEVATION	MOUNTING HEIGHT	LAMP TYPE	QTY / POLE
2	P1, P3	60'	-	60'	400W MH	3/3*
1	P2	60'	-	60'	400W MH	2/2*
3	TOTALS					16

* This structure utilizes a back-to-back mounting configuration

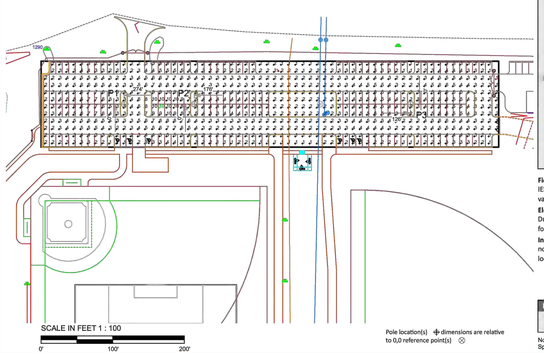

Pole location(s) dimensions are relative to 0,0 reference point(s)

MY PROJECT

Name: **Ramblewood Park Baseball And Soccer**
Location: Harrisonburg,VA

GRID SUMMARY

Name: Parking
Size: 639' x 120'
Spacing: 10.0' x 10.0'
Height: 3.0' above grade

MAINTAINED ILLUMINATION

SUMMARY	HORIZONTAL FOOTCANDLES
	Entire Grid
Guaranteed Average:	**3**
Scan Average:	3.41
Maximum:	10
Minimum:	1
Avg / Min:	3.18
Max / Min:	**9.63**
UG (adjacent pts):	1.59
CV:	0.53
No. of Points:	762
LUMINAIRE INFORMATION	
Luminaire Type:	Green Generation
Rated Lamp Life:	20,000 hours
Avg Lumens / Lamp:	36,000
Avg Tilt Factor:	0.814
Add'l Non-Rec LLF:	1.000
Recoverable LLF:	1.000
Total LLF:	0.814
No. of Luminaires:	16
Avg KW:	7.52 (7.52 max)

Field Measurements: Illumination measured in accordance with the IESNA LM-5-04 and CIBSE LG4. Individual values may vary. See the Warranty document for details.

Electrical System Requirements: Refer to Amperage Draw Chart and/or the **Musco Control System Summary** for electrical sizing.

Installation Requirements: Results assume +/- 3% nominal voltage at line side of the ballast and structures located within 3 feet (1m) of design locations.

ENGINEERED DESIGN

By: **Ben Drost**
File # / Date: 157918a 08-May-13

Not to be reproduced in whole or part without the written consent of Musco Sports Lighting, LLC. ©1981, 2013 Musco Sports Lighting, LLC.

ILLUMINATION SUMMARY

Draper Aden Associates
Engineering • Surveying • Environmental Services
Blacksburg, VA
Richmond, VA
Hampton Roads, VA
Charlottesville, VA
700 Harris Street, Suite B
Charlottesville, VA 22903
434-295-0700 Fax: 434-295-2105
www.daa.com

ILLUMINATION SUMMARY - 2 OF 2

RAMBLEWOOD PARK IMPROVEMENTS

RAMBLEWOOD PARK, HARRISONBURG, VIRGINIA

REVISIONS

DESIGNED BY:	MUSCO
DRAWN BY:	
CHECKED BY:	
SCALE:	NO SCALE
DATE:	MAY 10, 2013
PROJECT NUMBER:	06154-192CV

E2.1

P:\06154\06154-192CV\CAD\06154-192CV_ZONHI154-192CV_PHOTOMETRIC.dwg May 10, 2013 3:35:08 PM

NOTES & LEGENDS

HEADS

● – KRAIN PROSPORT SERIES GEAR DRIVEN SPRINKLER W/ #10 NOZZLE, 11.8 GPM.
⬢ – TORO 16QUICK COUPLING VALVE

PIPE

———— – DENOTES ROUTE OF PR 200 PVC LATERAL PIPING. (SIZE AS LABELED)

- - - - - - – DENOTES ROUTE OF PR 200 MAIN LINE PIPING. (SIZE AS LABELED)

VALVES

– LOCATION OF ELECTRIC 24 V.A.C. REMOTE CONTROL VALVE WITH FLOW CONTROL FEATURE (MODEL # TORO P220-26-9X).
⋈ – LOCATION OF LINE SIZED ISOLATION VALVE.

DECODERS

– INSTALL A TORO 1-STATION DECODER AT EACH CONTROLL VALVE (MODEL NUMBER CDEC-1).

GROUNDING

(G) – LOCATION OF THE IRRIGATION SYSTEM SURGE PROTECTION. SURGE PROTECTION SHALL INCLUDE A 4" X 36" GROUND PLATE, 50 LBS OF GROUND ENHANCEMENT MATERIAL, AND A TORO SURGE PROTECTOR (MODEL NUMBER DEC-SG-LINE). THE PROTECTOR SHALL BE INSTALLED IN A 6" VALVE BOX.

– DBY-6 TYPE SPLICE KITS SHALL BE USED AT ALL WIRE SPLICE LOCATIONS.

CONTROLLER

[A] – LOCATION OF THE IRRIGATION CONTROLLER. THE CONTROLLER SHALL BE TORO TDC SERIES SOLID STATE UNIT WHICH SHALL BE OF THE WALL MOUNT STYLE. THE CONTROLLER SHALL BE OF THE MODEL NUMBER CDEC-SA-100. THE CONTROLLER SHALL BE MOUNTED IN THE APPROXIMATE LOCATION SHOWN ON THE PLAN.

– ALL ELECTRICAL CONNECTIONS AND INSTALLATIONS SHALL BE PERFORMED IN ACCORDANCE WITH LOCAL CODE REQUIREMENTS.
– ALL 120 VAC WIRING SHALL BE INSTALLED IN ACCORDANCE WITH ALL APPLICABLE ELECTRICAL CODE REQUIREMENTS.

NOTE: THE OWNER SHALL BE RESPONSIBLE FOR PROVIDING A 120 VAC POWER CIRCUIT AT THE CONTROLLER LOCATION. THE POWER SOURCE SHALL BE CAPABLE OF SUPPORTING A 10 AMPERE LOAD AT 120 VAC.

RAIN SENSOR

(R) – DENOTES THE LOCATION OF WIRELESS RAIN SENSOR.

BACKFLOW PREVENTION

▶▶ – DENOTES THE LOCATION OF REDUCED PRESSURE BACKFLOW PREVENTER (FEBCO) ASSEMBLY WHICH SHALL BE THE RESPONSIBILITY OF THE IRRIGATION CONTRACTOR. THE BACKFLOW SHALL BE 2" IN SIZE.

WATER SUPPLY

(M) – DENOTES THE LOCATION OF THE PROPOSED IRRIGATION METER. THE METER SHALL BE THE OWNER'S RESPONSIBILITY. THE METER SHALL BE 2" IN SIZE.

– THE IRRIGATION SYSTEMS SHALL BE CAPABLE OF DELIVERING 48 GPM AT 90 PSI MAXIMUM WITH ONE STATION OPERATING WITH 60 PSI AT THE BASE OF THE HEAD FOR OPTIMUM PERFORMANCE OF THE IRRIGATION SYSTEM AS DESIGNED AND SPECIFIED.

* NOTE * – IF THE WATER SUPPLY IS NOT CAPABLE OF THE DESIGNED CAPACITY (FLOW AND/OR PRESSURE), THE IRRIGATION SYSTEM WILL NEED TO BE REDESIGNED, WHICH MAY ALTER THE IRRIGATION MATERIAL ESTIMATE.

SLEEVING

– DENOTES LOCATION OF 6" PVC SLEEVES FOR IRRIGATION PIPING.

– WHERE WIRE RUNS OCCUR, A SEPARATE 2" PVC ELECTRICAL CONDUIT SLEEVE SHALL BE USED FOR 24 VAC WIRING PER ELECTRICAL CODE.

– WHERE IRRIGATION PIPING CROSSES SIDEWALKS, THE CONTRACTOR SHALL BE RESPONSIBLE FOR PLACING A SLEEVE 2 SIZES LARGER THAN THE PIPE THAT IS CROSSING.

NOTE: THE IRRIGATION SYSTEM IS DISPLAYED SCHEMATIC IN NATURE. THE IRRIGATION CONTRACTOR MAY BE REQUIRED TO MAKE MINOR ADJUSTMENTS IN THE FIELD. THESE MINOR ADJUSTMENTS SHALL BE MADE AT NO ADDITIONAL COST TO THE OWNER BUT SHALL BE MADE ONLY AFTER NOTIFICATION IS MADE TO THE OWNER OR HIS REPRESENTATIVE.

– THIS DESIGN IS BASED ON THE SITE INFORMATION AND/OR DRAWINGS SUPPLIED BY THE CLIENT OF RECORD WITH DESIGN CRITERIA BEING SET BY THE CLIENT AND/OR PROJECT OWNER (I.E. AREA TO BE IRRIGATED, MANUFACTURER'S EQUIPMENT TO BE EMPLOYED, WATER SOURCE (LOCATION, FLOW & PRESSURE) CAPACITIES, ELECTRICAL POWER AVAILABILITY FOR IRRIGATION SYSTEM USE, ETC.). SMITH TURF & IRRIGATION BEARS NO RESPONSIBILITY OR LIABILITY FOR ANY ERRORS IN DESIGN OR APPLICATION WHICH MIGHT ARISE DUE TO INACCURACIES IN THE ABOVE REFERENCED INFORMATION SUPPLIED TO SMITH TURF & IRRIGATION IN RELATION TO THIS SPECIFIC PROJECT UNLESS OTHERWISE NOTED.

STI DESIGNS
2201 Dabney Road
Richmond, Virginia 23230
Phone: (804) 355-6404

THE IRRIGATION PLANS AND SPECIFICATIONS FOR THIS PROJECT PREPARED BY SMITH TURF IRRIGATION COMPANY ARE SUPPLIED FOR USE BY OUR CLIENT ONLY AND MAY NOT BE COPIED OR REPRODUCED BY ANY PERSON OR PERSONS OTHER THAN SAID CLIENT OR HIS AGENTS. THESE PLANS AND SPECIFICATIONS SHALL BE USED ONLY IN CONNECTION WITH THE PARTICULAR WORK AND PRODUCTS SPECIFIED AND SHALL NOT BE USED IN CONNECTION WITH ANY OTHER PROJECT WITHOUT THE EXPRESS WRITTEN CONSENT OF SMITH TURF & IRRIGATION CO.

NO.	REVISION	BY	DATE

DRAWN: JFH
APPROVED:
FILENAME: IRR041913
DATE: 4-19-13

J. FELICE HALL
LICENSED IRRIGATION DESIGNER
#003279
COMMERCIAL

DRAWINGS FOR:
RAMBLEWOOD PARK
HARRISONBURG, VIRGINIA
IRRIGATION LAYOUT

SCALE: 1" = 30'
SHEET: 1 OF 2
PROJECT NO.: 1371030

STI SMITH TURF & IRRIGATION CO.
P.O. BOX 6327 • RICHMOND, VIRGINIA • 23230-0327
(804) 355-6404 • DISTRIBUTORS • (800) 752-7931

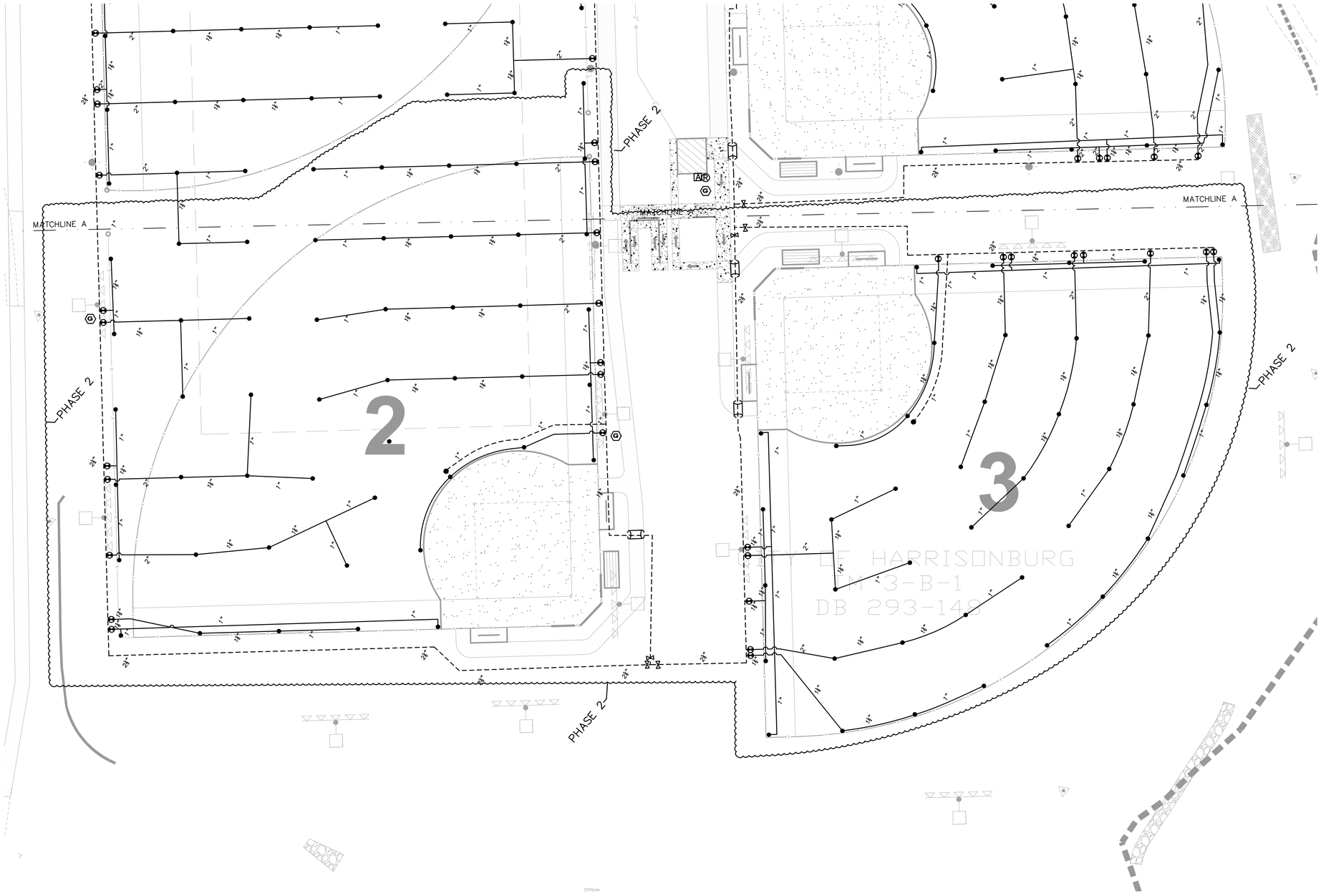

NOTES & LEGENDS

HEADS

● – KRAIN PROSPORT SERIES GEAR DRIVEN SPRINKLER W/ #10 NOZZLE, 11.8 GPM.
⬢ – TORO 16QUICK COUPLING VALVE

PIPE

———— – DENOTES ROUTE OF PR 200 PVC LATERAL PIPING. (SIZE AS LABELED)

- - - - - - – DENOTES ROUTE OF PR 200 MAIN LINE PIPING. (SIZE AS LABELED)

VALVES

– LOCATION OF ELECTRIC 24 V.A.C. REMOTE CONTROL VALVE WITH FLOW CONTROL FEATURE (MODEL # TORO P220-26-9X).
⋈ – LOCATION OF LINE SIZED ISOLATION VALVE.

DECODERS

– INSTALL A TORO 1-STATION DECODER AT EACH CONTROLL VALVE (MODEL NUMBER CDEC-1).

GROUNDING

(G) – LOCATION OF THE IRRIGATION SYSTEM SURGE PROTECTION. SURGE PROTECTION SHALL INCLUDE A 4" X 36" GROUND PLATE, 50 LBS OF GROUND ENHANCEMENT MATERIAL, AND A TORO SURGE PROTECTOR (MODEL NUMBER DEC-SG-LINE). THE PROTECTOR SHALL BE INSTALLED IN A 6" VALVE BOX.

– DBY-6 TYPE SPLICE KITS SHALL BE USED AT ALL WIRE SPLICE LOCATIONS.

CONTROLLER

[A] – LOCATION OF THE IRRIGATION CONTROLLER. THE CONTROLLER SHALL BE TORO TDC SERIES SOLID STATE UNIT WHICH SHALL BE OF THE WALL MOUNT STYLE. THE CONTROLLER SHALL BE OF THE MODEL NUMBER CDEC-SA-100. THE CONTROLLER SHALL BE MOUNTED IN THE APPROXIMATE LOCATION SHOWN ON THE PLAN.

– ALL ELECTRICAL CONNECTIONS AND INSTALLATIONS SHALL BE PERFORMED IN ACCORDANCE WITH LOCAL CODE REQUIREMENTS.
– ALL 120 VAC WIRING SHALL BE INSTALLED IN ACCORDANCE WITH ALL APPLICABLE ELECTRICAL CODE REQUIREMENTS.

NOTE: THE OWNER SHALL BE RESPONSIBLE FOR PROVIDING A 120 VAC POWER CIRCUIT AT THE CONTROLLER LOCATION. THE POWER SOURCE SHALL BE CAPABLE OF SUPPORTING A 10 AMPERE LOAD AT 120 VAC.

RAIN SENSOR

(R) – DENOTES THE LOCATION OF WIRELESS RAIN SENSOR.

BACKFLOW PREVENTION

▶▶ – DENOTES THE LOCATION OF REDUCED PRESSURE BACKFLOW PREVENTER (FEBCO) ASSEMBLY WHICH SHALL BE THE RESPONSIBILITY OF THE IRRIGATION CONTRACTOR. THE BACKFLOW SHALL BE 2" IN SIZE.

WATER SUPPLY

(M) – DENOTES THE LOCATION OF THE PROPOSED IRRIGATION METER. THE METER SHALL BE THE OWNER'S RESPONSIBILITY. THE METER SHALL BE 2" IN SIZE.

– THE IRRIGATION SYSTEMS SHALL BE CAPABLE OF DELIVERING 48 GPM AT 90 PSI MAXIMUM WITH ONE STATION OPERATING WITH 60 PSI AT THE BASE OF THE HEAD FOR OPTIMUM PERFORMANCE OF THE IRRIGATION SYSTEM AS DESIGNED AND SPECIFIED.

* NOTE * – IF THE WATER SUPPLY IS NOT CAPABLE OF THE DESIGNED CAPACITY (FLOW AND/OR PRESSURE), THE IRRIGATION SYSTEM WILL NEED TO BE REDESIGNED, WHICH MAY ALTER THE IRRIGATION MATERIAL ESTIMATE.

SLEEVING

– DENOTES LOCATION OF 6" PVC SLEEVES FOR IRRIGATION PIPING.

– WHERE WIRE RUNS OCCUR, A SEPARATE 2" PVC ELECTRICAL CONDUIT SLEEVE SHALL BE USED FOR 24 VAC WIRING PER ELECTRICAL CODE.

– WHERE IRRIGATION PIPING CROSSES SIDEWALKS, THE CONTRACTOR SHALL BE RESPONSIBLE FOR PLACING A SLEEVE 2 SIZES LARGER THAN THE PIPE THAT IS CROSSING.

NOTE: THE IRRIGATION SYSTEM IS DISPLAYED SCHEMATIC IN NATURE. THE IRRIGATION CONTRACTOR MAY BE REQUIRED TO MAKE MINOR ADJUSTMENTS IN THE FIELD. THESE MINOR ADJUSTMENTS SHALL BE MADE AT NO ADDITIONAL COST TO THE OWNER BUT SHALL BE MADE ONLY AFTER NOTIFICATION IS MADE TO THE OWNER OR HIS REPRESENTATIVE.

– THIS DESIGN IS BASED ON THE SITE INFORMATION AND/OR DRAWINGS SUPPLIED BY THE CLIENT OF RECORD WITH DESIGN CRITERIA BEING SET BY THE CLIENT AND/OR PROJECT OWNER (I.E. AREA TO BE IRRIGATED, MANUFACTURER'S EQUIPMENT TO BE EMPLOYED, WATER SOURCE (LOCATION, FLOW & PRESSURE) CAPACITIES, ELECTRICAL POWER AVAILABILITY FOR IRRIGATION SYSTEM USE, ETC.). SMITH TURF & IRRIGATION BEARS NO RESPONSIBILITY OR LIABILITY FOR ANY ERRORS IN DESIGN OR APPLICATION WHICH MIGHT ARISE DUE TO INACCURACIES IN THE ABOVE REFERENCED INFORMATION SUPPLIED TO SMITH TURF & IRRIGATION IN RELATION TO THIS SPECIFIC PROJECT UNLESS OTHERWISE NOTED.

STI
SMITH TURF & IRRIGATION CO.
P.O. BOX 6327 • RICHMOND, VIRGINIA • 23230-0327
(804) 355-6404 • D I S T R I B U T O R S • (800) 752-7931

STI DESIGNS
2201 Dabney Road
Richmond, Virginia 23230
Phone: (804) 355-6404

THE IRRIGATION PLANS AND SPECIFICATIONS FOR THIS PROJECT PREPARED BY SMITH TURF IRRIGATION COMPANY ARE SUPPLIED FOR USE BY OUR CLIENT ONLY AND MAY NOT BE COPIED OR REPRODUCED BY ANY PERSON OR PERSONS OTHER THAN SAID CLIENT OR HIS AGENTS. THESE PLANS AND SPECIFICATIONS SHALL BE USED ONLY IN CONNECTION WITH THE PARTICULAR WORK AND PRODUCTS SPECIFIED AND SHALL NOT BE USED IN CONNECTION WITH ANY OTHER PROJECT WITHOUT THE EXPRESS WRITTEN CONSENT OF SMITH TURF & IRRIGATION CO.

NO.	REVISION	BY	DATE

DRAWN: JFH
APPROVED:
FILENAME: IRR041913
DATE: 4-19-13

J. FELICE HALL
REGISTERED IRRIGATION DESIGNER
003276
COMMERCIAL

DRAWINGS FOR:

RAMBLEWOOD PARK
HARRISONBURG, VIRGINIA

IRRIGATION LAYOUT

SCALE: 1" = 30'

SHEET: 2 OF 2

PROJECT NO.: 1371030