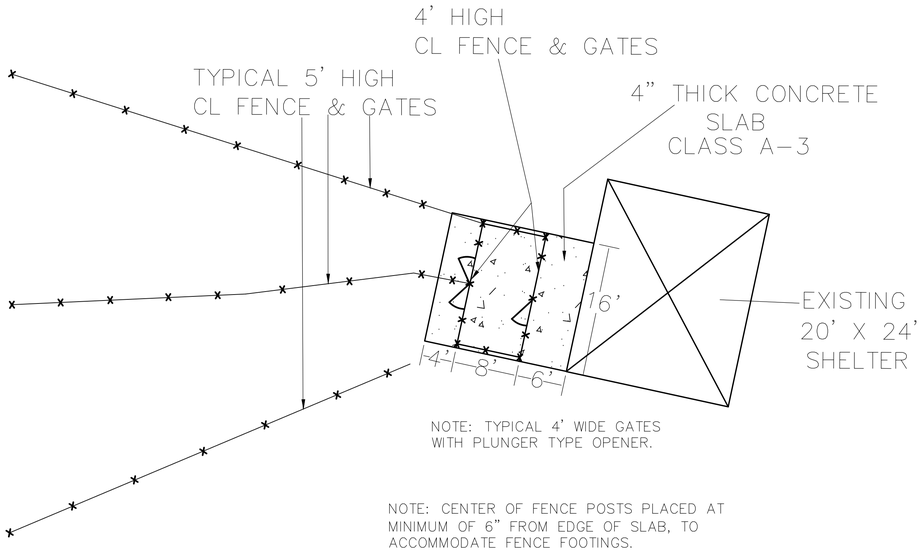

NOTE: TYPICAL 4' WIDE GATES WITH PLUNGER TYPE OPENER.

NOTE: CENTER OF FENCE POSTS PLACED AT MINIMUM OF 6" FROM EDGE OF SLAB, TO ACCOMMODATE FENCE FOOTINGS.

1 DETAIL OF BULLPEN AREA

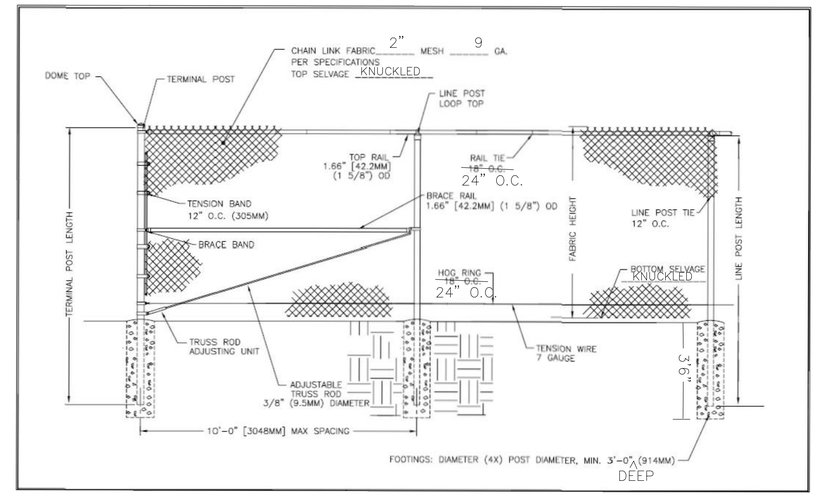

2 TYPICAL FENCE SECTION

NOTE: SEE PROJECT MANUAL FOR ADDITIONAL DETAILS AND SIZES.

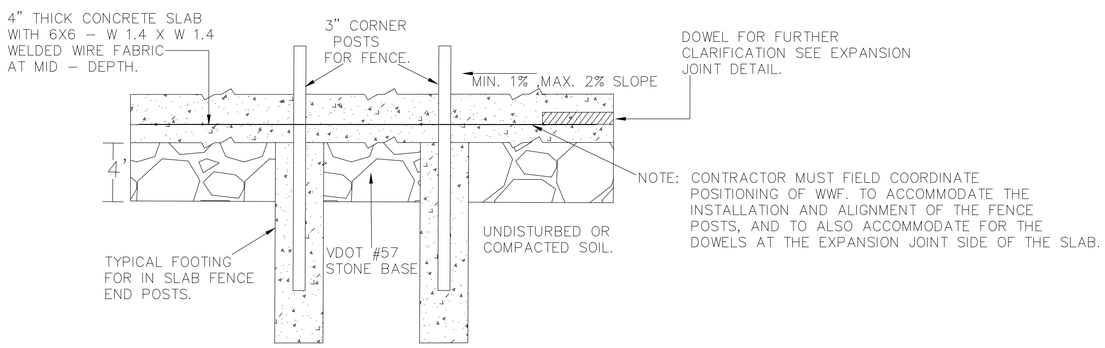

3 SECTION AT BULLPEN SOG

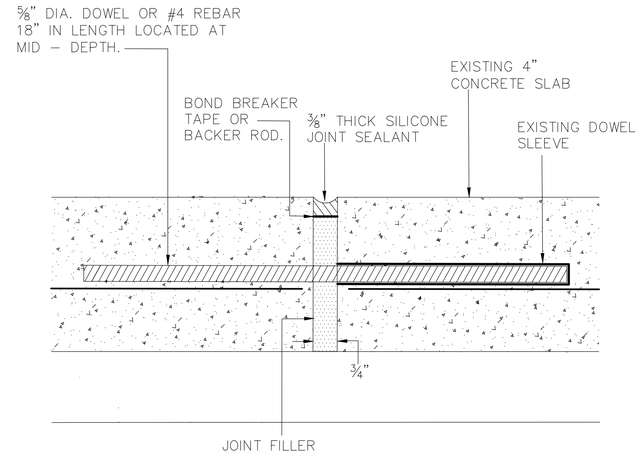

NOTE: SUBMIT PRODUCT DATA AND MSDS FOR SILICONE JOINT SEALANT, JOINT FILLER, BOND BREAKER TAPE/BACKER ROD.

4 EXPANSION JOINT DETAIL

COMMONWEALTH OF VIRGINIA
DANIEL J. RUBLEE
No. 018675
PROFESSIONAL ENGINEER

REV	DATE	DESCRIPTION	BY

SCALE:	HORZ. N/A
DRAWN BY	DATE
JRS	MAY 2014
CHECKED BY	DATE
DJR	MAY 2014
DESIGN BY	DATE
DMB	MAY 2014
TAX MAP	
63 & 64	

SMITHLAND ROAD
DOG PARK

DIVISION OF ENGINEERING
CITY OF HARRISONBURG
409 SOUTH MAIN STREET
HARRISONBURG, VIRGINIA

SHEET
2
DETAILS
1 — 4

Smithland Road Park – 2004\dwg\Plans.dwg