DEPARTMENT OF FINANCE AND PURCHASING

345 South Main Street

Harrisonburg, VA 22801

ISSUE DATE: December 30, 2013	**INVITATION TO BID NUMBER:** 2014019-PU-B	**FOR:** Precast Sanitary Sewer Manholes
DEPARTMENT: Public Utilities	**DATE/TIME OF CLOSING:** January 28, 2014 at 3:00pm local time	**CONTRACT ADMINISTRATOR:** James Fultz, Jr., P.E.

Bids - In accordance with the following and in compliance with all terms and conditions, unless otherwise noted, the undersigned offers and agrees, if the bid is accepted, to furnish items or services for which prices are quoted, delivered or furnished to designated points within the time specified. It is understood and agreed that this entire ITB and any addendums shall constitute a contract.

NAME AND ADDRESS OF FIRM:

Telephone/Fax No.:

Federal Employer Identification # :

State Corporation Commission #:

E-mail:

Prompt Payment Discount: __% for payment within___days/net___ days

By signing this bid, Vendor(s) certifies, acknowledges, understands, and agrees to be bound by the conditions set forth in this ITB.

CHECK ONE: ☐ **INDIVIDUAL** ☐ **PARTNERSHIP** ☐ **CORPORATION** ☐ **LLC**

Vendor's Legally Authorized Signature

Date

Print Name

Title

Sealed bids, subject to terms and conditions of this Invitation to Bid will be received by the City of Harrisonburg Purchasing Office, 345 South Main Street, Room 201, Harrisonburg, Virginia 22801 until the date/ time specified above for furnishing items or services delivered or furnished to specified destinations within the time specified or stipulated by the vendor(s).

The City does not discriminate against small and minority businesses or faith-based organizations.

**This document must be completed & returned with bid submission.*

TABLE OF CONTENTS

I. DESCRIPTION **2**
II. CONTRACT PERIOD **2**
III. SPECIFICATIONS **2**
IV. GENERAL TERMS & CONDITIONS FOR THE CITY OF HARRISONBURG, VA ... **4**
V. INSTRUCTIONS TO BIDDERS **11**
VI. QUESTIONS **11**
VII. MODIFICATIONS & WITHDRAWAL OF BID **11**
VIII. AWARD OF CONTRACT **12**

ATTACHMENTS

A. ESTIMATED PRODUCT QUANTITIES & COST BID SHEET **13**
B. EXCEPTIONS TO SPECIFICATIONS **14**
C. STATE CORPORATION COMMISSION (SCC) FORM **15**
D. SAMPLE STANDARD CONTRACT ITB **16**
E. INSURANCE FORM **17**
F. City's Design & Construction Standard, DWG35, Page 49 ..... **18**
G. City's Design & Construction Standard, DWG36, Page 50 ..... **19**
H. City's Design & Construction Standard, DWG39, Page 53 ..... **20**
I. City's Design & Construction Standard, DWG40, Page 54 ..... **21**
J. Virginia Department of Transportation (VDOT) Standard 103.09 ..... **22**
K. City of Harrisonburg Product Status List **23**
L. City of Harrisonburg Public Utilities Product Manual **26**

I. DESCRIPTION

The City of Harrisonburg is seeking bids from qualified vendors to manufacture new concrete precast sanitary sewer manholes as specified herein. Precast manholes will be 4 and 5 foot inside diameters meeting City of Harrisonburg current product specifications. The height of each manhole ordered will vary. Product specifications are found in the City of Harrisonburg Design and Construction Standards Manual, Public Utility Department approved Product Manual, and Product List (attached).

II. CONTRACT PERIOD

The contract is effective for one (1) year from the date of award. The bidder shall hold effective for 365 days from date of contract award, the bid price as submitted for each product, regardless of the quantity ordered. Upon mutual agreement, there will be an option to renew for four (4) additional one (1) year periods Any price increases will require written justification. The City will receive the benefit of any price reductions as well.

III. SPECIFICATIONS

The purpose of these specifications is to secure for the City of Harrisonburg an unspecified number of precast concrete manholes at any time during the contract period that meet the requirements of this ITB. Any exceptions to the requirements shall be identified in ATTACHMENT B. EXCEPTIONS TO SPECIFICATIONS FORM of this document.

PART A – GENERAL REQUIREMENTS

A.1 All manholes and accessories shall be delivered to the City of Harrisonburg Public Utilities Department, 2155 Beery Road, Harrisonburg, Virginia, 22801. The manholes shall be complete and ready to install at the time of delivery.

A.2 The bidder shall submit within the Bid Form (Attachment A) a firm delivery time. All transportation charges shall be included in bid price. Bidder understands that delivery time shall be taken into consideration in evaluation of the bid. If the awarded vendor cannot supply the City for any order that cannot meet the required delivery time, the City reserves the right to purchase from another vendor. The City would prefer a delivery time of no more than 3 weeks.

A.3 The owner will be provided ten working days to inspect each item delivered upon arrival; acceptance is a requirement to payment. The Owner may withhold total payment if the product is in jeopardy of meeting the performance requirement.

A.4 The bidder shall hold effective for 365 days the bid price as submitted.

A.5 All equipment, materials and workmanship shall be of the highest grade in accordance with modern practices and all products supplied will be new and unused. Further specifications for materials and requirements for products are listed in the detailed specifications below.

A.6 The bidder understands that the City requires a warranty period of 1 year for all products purchased. The bidder shall be responsible for all warranty repairs to the products.

A.7 Bidder shall provide a breakdown of unit cost for each product specified in Attachment A Estimated Product Quantities & Cost Bid Sheet.

A.8 Bidder shall provide a list of three (3) municipalities who can provide references on quality of products, timeliness and professionalism of company. Reference list shall include contact name, phone number and email address.

PART B – 4 & 5 FOOT INSIDE DIAMETER MANHOLE DETAILED SPECIFICATIONS

B.1 Each manhole shall meet all requirements specified on City of Harrisonburg Design & Construction Standards Manual details DWG. NO. 35, PAGE 49, DWG. NO. 36, PAGE 50, DWG. NO. 39, PAGE 53 and DWG. NO. 40, PAGE 54 Public Utility Department approved Product Manual, and Product List. These documents are attached.

B.2 4 and 5 foot manhole base.

B.3 4 and 5 foot manhole cone each 2’-8” height.

B.4 4 and 5 foot manhole flat top slab unit. Per VDOT Road and Bridge Standard Section 100 page 103.09.

B.5 4 and 5 foot riser each vertical foot. This unit cost includes installation of approved manhole steps and all required gaskets.

B.6 each gallon of bitumastic black exterior coating.

B.7 each sanitary sewer invert shaping.

B.8 each flexible joint pipe connection for 8 inch pipe sizes. Pipe connections shall be based on 8 inch SDR-35 PVC by Press-Seal Gasket Corporation.. Flexible joints shall meet current requirements of ASTM C-923.

PART C – PERFORMANCE REQUIREMENTS

D.1 Bidder will have two weeks from owner’s written request for each manhole to forward e-mail or fax to Public Utility Sewer Fund Manager requesting authorization for release to production. Public Utility’s estimates ordering approximately 3 sanitary sewer manholes

per month under this contract. *(Note: This is NOT a guaranteed quantity, but rather an estimate of product needs for the City.)*

D.2 Bidder shall deliver manhole by the delivery time period set forth in this bid document. The City shall strictly adhere to the delivery time stated by the bidder in ATTACHMENT A. Time period shall commence upon the date that the Sewer Fund Manager confirms release for production.

IV. GENERAL TERMS & CONDITIONS FOR THE CITY OF HARRISONBURG, VA

PURCHASING AND CONTRACTING MANUAL: This solicitation is subject to the provisions of The Purchasing and Contracting Policy Manual for the City of Harrisonburg (City) and any revisions thereto, which are hereby incorporated into this contract in their entirety. A copy of the manual is available for review at www.Harrisonburgva.gov/bids-proposals.

APPLICABLE LAWS AND COURTS: This solicitation and any resulting contract shall be governed in all respects by the laws of the Commonwealth of Virginia and any litigation with respect thereto shall be brought in the courts of the Commonwealth. The contractor shall comply with all applicable federal, state and local laws, rules and regulations.

ANTI-DISCRIMINATION: By submitting their (bids/proposals), (bidders/offerors) certify to the City that they will conform to the provisions of the Federal Civil Rights Act of 1964, as amended, as well as the Virginia Fair Employment Contracting Act of 1975, as amended, where applicable, the Virginians With Disabilities Act, the Americans With Disabilities Act and 2.2-4311 of the *Virginia Public Procurement Act*.

In every contract over $10,000 the provisions below apply:

1. During the performance of this contract, the contractor agrees as follows:

a. The contractor will not discriminate against any employee or applicant for employment because of race, religion, color, sex, national origin, age, disability, or any other basis prohibited by state law relating to discrimination in employment, except where there is a bona fide occupational qualification reasonably necessary to the normal operation of the contractor. The contractor agrees to post in conspicuous places, available to employees and applicants for employment, notices setting forth the provisions of this nondiscrimination clause.

b. The contractor, in all solicitations or advertisements for employees placed by or on behalf of the contractor, will state that such contractor is an equal opportunity employer.

c. Notices, advertisements and solicitations placed in accordance with federal law, rule or regulation shall be deemed sufficient for the purpose of meeting these requirements.

The contractor will include the provisions of 1. above in every subcontract or purchase order over $10,000, so that the provisions will be binding upon each subcontractor or vendor.

2. The City does not discriminate against small and minority businesses or faith based organizations.

ETHICS IN PUBLIC CONTRACTING: By submitting their (bids/proposals), (bidders/offerors) certify that their (bids/proposals) are made without collusion or fraud and that they have not offered or received any kickbacks or inducements from any other (bidder/offeror), supplier, manufacturer or subcontractor in connection with their (bid/proposal), and that they have not conferred on any public employee having official responsibility for this procurement transaction any payment, loan, subscription, advance, deposit of money, services or anything of more than nominal value, present or promised, unless consideration of substantially equal or greater value was exchanged.

IMMIGRATION REFORM AND CONTROL ACT OF 1986: By submitting their (bids/proposals), (bidders/offerors) certify that they do not and will not during the performance of this contract employ illegal alien workers or otherwise violate the provisions of the federal Immigration Reform and Control Act of 1986.

DEBARMENT STATUS: By submitting their (bids/proposals), (bidders/offerors) certify that they are not currently debarred by the Commonwealth of Virginia from submitting bids or proposals on contracts for the type of goods and/or services covered by this solicitation, nor are they an agent of any person or entity that is currently so debarred.

ANTITRUST: By entering into a contract, the contractor conveys, sells, assigns, and transfers to the City all rights, title and interest in and to all causes of action it may now have or hereafter acquire under the antitrust laws of the United States and the Commonwealth of Virginia, relating to the particular goods or services purchased or acquired by the City under said contract.

MANDATORY USE OF CITY FORM AND TERMS AND CONDITIONS FOR IFBs AND RFPs

1. (For Invitation For Bids(ITB):) Failure to submit a bid on the form provided, (if provided) shall be a cause for rejection of the bid. Modification of or additions to any portion of the Invitation for Bids may be cause for rejection of the bid; however, the City reserves the right to decide, on a case by case basis, in its sole discretion, whether to reject such a bid as nonresponsive. As a precondition to its acceptance, the City may, in its sole discretion, request that the bidder withdraw or modify nonresponsive portions of a bid which do not affect quality, quantity, price, or delivery. No modification of or addition to the provisions of the contract shall be effective unless reduced to writing and signed by the parties.

2. (For Request For Proposals(RFP):) Failure to submit a proposal on the form provided, (if provided) shall be a cause for rejection of the bid. Modification of or additions to the General Terms and Conditions of the solicitation may be cause for rejection of the proposal; however, the City reserves the right to decide, on a case by case basis, in its sole discretion, whether to reject such a proposal.

REVISIONS TO THE OFFICIAL ITB/RFP: No offeror shall modify, revise, edit or make any unauthorized change(s) to the original Official Invitation to Bid (ITB) or Official Request for Proposal (RFP). The Official solicitation document and the Addenda(s) are the documents posted on the City of Harrisonburg's web site and/or authorized by the City of Harrisonburg's Purchasing Agent. Any such violation as stated above may result in rejection of the ITB/RFP response. In addition, violations may result in the debarment of the offeror by the City of Harrisonburg.

CLARIFICATION OF TERMS: If any prospective (bidder/offeror) has questions about the specifications or other solicitation documents, the prospective (bidder/offeror) should contact the person whose name appears on the face of the solicitation no later than five working days before the due date. Any revisions to the solicitation will be made only by addendum issued by the buyer.

PAYMENT:

1. To Prime Contractor:

a. Invoices for items ordered, delivered and accepted shall be submitted by the contractor directly to the payment address shown on the purchase order/contract. All invoices shall show the purchase order number; social security number (for individual contractors) or the federal employer identification number (for proprietorships, partnerships, and corporations).

b. Any payment terms requiring payment in less than 30 days will be regarded as requiring payment 30 days after invoice or delivery, whichever occurs last. This shall not affect offers of discounts for payment in less than 30 days, however.

c. All goods or services provided under this contract or purchase order, that are to be paid for with public funds, shall be billed by the contractor at the contract price.

d. The following shall be deemed to be the date of payment: the date of postmark in all cases where payment is made by mail, or the date of offset when offset proceedings have been instituted as authorized under the Virginia Debt Collection Act.

e. Individual contractors shall provide their social security numbers, and proprietors , partnerships, and corporations shall provide the City with a federal employer identification number, prior to receiving any payment from the City.

f. **Unreasonable Charges**. Under certain emergency procurements and for most time and material purchases, final job costs cannot be accurately determined at the time orders are placed. In such cases, contractors should be put on notice that final payment in full is contingent on a determination of reasonableness with respect to all invoiced charges. Charges which appear to be unreasonable will be researched and challenged, and that portion of the invoice held in abeyance until a settlement can be reached. Upon determining that invoiced as to those charges which it considers unreasonable and the basis for the determination. A contractor may not

institute legal action unless a settlement cannot be reached within thirty (30) days of notification. The provisions of this section do not relieve the City of its prompt payment obligations with respect to those charges which are not in dispute (*Code of Virginia*, 2.2.4363.

2. To Subcontractors:

a. A contractor awarded a contract under this solicitation is hereby obligated:

(1) To pay the subcontractor(s) within seven (7) days of the contractor's receipt of payment from the City for the proportionate share of the payment received for work performed by the subcontractor(s) under the contract; or

(2) To notify the City and the subcontractor(s), in writing, of the contractor's intention to withhold payment and the reason.

b. The contractor is obligated to pay the subcontractor(s) interest at the rate of one percent per month (unless otherwise provided under the terms of the contract) on all amounts owed by the contractor that remain unpaid seven (7) days following receipt of payment from the City, except for amounts withheld as stated in (2) above. The date of mailing of any payment by U. S. Mail is deemed to be payment to the addressee. These provisions apply to each sub-tier contractor performing under the primary contract. A contractor's obligation to pay an interest charge to a subcontractor may not be construed to be an obligation of the City.

PRECEDENCE OF TERMS: General Terms and Conditions shall apply in all instances. In the event there is a conflict between any of the other General Terms and Conditions and any Special Terms and Conditions in this solicitation, the Special Terms and Conditions shall apply.

QUALIFICATIONS OF (BIDDERS/OFFERORS): The City may make such reasonable investigations as deemed proper and necessary to determine the ability of the (bidder/offeror) to perform the services/furnish the goods and the (bidder/offeror) shall furnish to the City all such information and data for this purpose as may be requested. The City reserves the right to inspect (bidder's/offeror's) physical facilities prior to award to satisfy questions regarding the (bidder's/offeror's) capabilities. The City further reserves the right to reject any (bid/ proposal) if the evidence submitted by, or investigations of, such (bidder/offeror) fails to satisfy the City that such (bidder/offeror) is properly qualified to carry out the obligations of the contract and to provide the services and/or furnish the goods contemplated therein.

TESTING AND INSPECTION: The City reserves the right to conduct any test/inspection it may deem advisable to assure goods and services conform to the specifications.

ASSIGNMENT OF CONTRACT: A contract shall not be assignable by the contractor in whole or in part without the written consent of the City.

CHANGES TO THE CONTRACT: Changes can be made to the contract in any of the following ways:

1. The parties may agree in writing to modify the scope of the contract. An increase or decrease in the price of the contract resulting from such modification shall be agreed to by the parties as a part of their written agreement to modify the scope of the contract.
2. The Purchasing Agent or City delegated agent may order changes within the general scope of the contract at any time by written notice to the contractor. Changes within the scope of the contract include, but are not limited to, things such as services to be performed, the method of packing or shipment, and the place of delivery or installation. The contractor shall comply with the notice upon receipt. The contractor shall be compensated for any additional costs incurred as the result of such order and shall give the City a credit for any savings.

DEFAULT: In case of failure to deliver goods or services in accordance with the contract terms and conditions, the City, after due oral or written notice, may procure them from other sources and hold the contractor responsible for any resulting additional purchase and administrative costs. This remedy shall be in addition to any other remedies, which the City may have.

CANCELLATION OF THE CONTRACT: The City may terminate any agreement resulting from this solicitation at any time, for any reason or for no reason, upon thirty days advance written notice to the Contractor. In the event of such termination the Contractor shall be compensated for services and work performed prior to termination.

TAXES: Sales to the City of Harrisonburg are normally exempt from State sales tax. State sales and use tax certificates of exemption, Form ST-12, will be issued upon request.
(NOT NORMALLY REQUIRED FOR SERVICE CONTRACTS)

USE OF BRAND NAMES: Unless otherwise provided in this solicitation, the name of a certain brand, make or manufacturer does not restrict (bidders/offerors) to the specific brand, make or manufacturer named, but conveys the general style, type, character, and quality of the article desired. Any article which the public body, in its sole discretion, determines to be the equal of that specified, considering quality, workmanship, economy of operation, and suitability for the purpose intended, shall be accepted. The (bidder/offeror) is responsible to clearly and specifically identify the product being offered and to provide sufficient descriptive literature, catalog cuts and technical detail to enable the City to determine if the product offered meets the requirements of the solicitation. This is required even if offering the exact brand, make or manufacturer specified. Normally in competitive sealed bidding only the information furnished with the bid will be considered in the evaluation. Failure to furnish adequate data for evaluation purposes may result in declaring a bid nonresponsive. Unless the (bidder/offeror) clearly indicates in its (bid/proposal) that the product offered is an "equal" product, such (bid/proposal) will be considered to offer the brand name product referenced in the solicitation.**(NOT NORMALLY REQUIRED FOR SERVICE CONTRACTS)**

TRANSPORTATION AND PACKAGING: By submitting their (bids/proposals), all (bidders/offerors) certify and warrant that the price offered for FOB destination includes only the actual freight rate costs at the lowest and best rate and is based upon the actual weight of the goods to be shipped. Except as otherwise specified herein, standard commercial packaging, packing and shipping containers shall be used. All shipping containers shall be legibly marked

or labeled on the outside with purchase order number, commodity description, and quantity.**(NOT NORMALLY REQUIRED FOR SERVICE CONTRACTS)**

INSURANCE: By signing and submitting a bid or proposal under this solicitation, the bidder or offeror certifies that if awarded the contract, it will have insurance coverages per the solicitation document at the time the contract is awarded. For construction contracts, if any subcontractors are involved, the subcontractor will have workers' compensation insurance in accordance with 2.2-4332 and 65.2-800 et seq. of the *Code of Virginia*. The bidder or offeror further certifies that the contractor and any subcontractors will maintain these insurance coverages during the entire term of the contract and that all insurance coverages will be provided by insurance companies authorized to sell insurance in Virginia by the Virginia State Corporation Commission. **(NOT NORMALLY REQUIRED FOR GOODS CONTRACTS. INSURANCE IS REQUIRED WHEN WORK IS TO BE PERFORMED ON CITY OWNED OR LEASED FACILITIES OR PROPERTY.)**

AVAILABILITY OF FUNDS: Agreements are made subject to the appropriation of funds by the Harrisonburg City Council and are null and void in the event of non-appropriation by the City Council. Non-appropriation of funds shall not be deemed a cancellation and shall terminate this agreement without recourse and with no liability on the part of the City.

SELECTION PROCESS/AWARD: Upon the award or the announcement of the decision to award a contract as a result of this solicitation, the department will publicly post such notice for a minimum of ten (10) days, or will notify all responsive bidders/offerors.

BID/PROPOSAL ACCEPTANCE PERIOD: Any bid/proposal resulting from this solicitation shall be valid for (30) days. At the end of the (30) days the bid/proposal may be withdrawn at the written request of the Bidder/Offeror. If the bid or proposal is not withdrawn at that time it remains in effect until an award is made or the solicitation is canceled.

EXCUSABLE DELAY: The City shall not be in default of any failure in performance of this agreement in accordance with its terms if such failure arises out of causes beyond its reasonable control and without the fault of or negligence of the City. Such causes may include, but are not restricted to acts of God or the public enemy, fires, flood, epidemics, quarantine restrictions, strikes, freight embargoes, and usually severe weather, but in every case the failure to perform must be beyond the reasonable control and without the fault or negligence of the City.

DRUG-FREE WORKPLACE: During the performance of this contract, the contractor agrees to (i) provide a drug-free workplace for the contractor's employees; (ii) post in conspicuous places, available to employees and applicants for employment, a statement notifying employees that the unlawful manufacture, sale, distribution, dispensation, possession, or use of a controlled substance or marijuana is prohibited in the contractor's workplace and specifying the actions that will be taken against employees for violations of such prohibition; (iii) state in all solicitations or advertisements for employees placed by or on behalf of the contractor that the contractor maintains a drug-free workplace; and (iv) include the provisions of the foregoing clauses in every subcontract or purchase order of over $10,000, so that the provisions will be binding upon each subcontractor or vendor.

SAFETY and OSHA STANDARDS: All parties performing services for the City shall comply with all Occupational Safety and Health Administration (OSHA), State Occupational Health Standards, and any other applicable rules and regulations. All parties shall be held responsible for the training, supervision, and safety of their employees. Any unsafe acts or hazardous conditions that may cause injury or damage to any persons or property within and around the work site areas under this contract shall be remedied per the regulatory agency's guidelines.

PERMITS AND FEES: All proposals submitted shall have included in price the cost of any business or professional licenses, permits or fees required by the City of Harrisonburg or the Commonwealth of Virginia. The offeror must have all necessary licenses to perform the services in Virginia and, if practicing as a corporation, be authorized to do business in the Commonwealth of VA.

COOPERATIVE PROCUREMENT: This procurement is being conducted on behalf of other public bodies, in accordance with 2.2-4304 (A) of the Code of VA. The successful bidder has the option to provide these same items (services), except architectural and engineering services, at the same prices, awarded as a result of this solicitation to any public body within the Commonwealth of Virginia. If any other Public body decides to use the final contract, the contractor(s) must deal directly with that public body concerning the placement of orders, issuance of the purchase orders, contractual disputes, invoicing and payment. Failure to extend a contract to any public body will have no effect on consideration of your bid.

LIABILITY AND LITIGATION: The City shall not indemnify or hold harmless any Contractor or other third party. The City does not waive any right or release any party from liability, whether on its own behalf or on behalf of any boards, employees or agents. The City does not waive the right to trial by jury for any cause of action arising from the Contract and shall not submit any Contract claim to binding arbitration or mediation. The City shall not be liable to Contractor for any special, punitive or exemplary damages arising from the performance of the contract, including, but not limited to, incidental damages, and lost profit and lost wages, even if such special damages are reasonably foreseeable. Any provision(s) in the Contract contrary to these statements is/are hereby deleted and rendered void.

STATE CORPORATION COMMISSION IDENTIFICATION NUMBER: Pursuant to Code of VA 2.2-4311.2 subsection B, a bidder or offeror organized or authorized to transact business in the Commonwealth pursuant to Title 13.1 or Title 50 is required to include in its bid or proposal the identification number issued to it by the State Corporation Commission (SCC). Any bidder or offeror that is not required to be authorized to transact business in the Commonwealth as a foreign business entity under Title 13.1 or Title 50 or as otherwise required by law is required to include in its bid or proposal a statement describing why the bidder or offeror is not required to be so authorized. Link to the SCC site is http://www.scc.virginia.gov.

V. INSTRUCTIONS TO BIDDERS

All bids must be in an opaque, sealed envelope or box and clearly marked: "**Sealed Bid: Precast Sanitary Sewer Manholes 2014019-PU-B**". Proposals shall clearly indicate the legal name, address and telephone number of the bidder (company, firm, partnership, or individual). All expenses for making bid to the City shall be borne by the bidder.

Bidders shall provide three (3) paper copies and one (1) electronic copy (on CD or thumb drive) of the bid documents. Bid documents shall be mailed or hand-delivered to the **Purchasing Office located at 345 South Main Street, Room 201, Harrisonburg, VA 22801**. Faxed or emailed bids will not be accepted. Bids shall be received by the Purchasing Office no later than **Tuesday, January 28, 2014 at 3:00pm local time**. Any bids received after this date and time will not be accepted. The City of Harrisonburg is not responsible for delays in the delivery of the mail by the U.S. Postal Service, private couriers, or the inter-office mail system. The bidder has the sole responsibility to have the bid received by the Harrisonburg Purchasing Office at the above address and by the above stated time and date. Please note that the City will be closed on Friday, January 17, 2014 for Lee-Jackson Day and also on Monday, January 20, 2014 for Martin Luther King, Jr. Day. Keep this in mind when considering the best date for delivery of your bid documents.

All documents contained within the bid submission shall be completed in their entirety and signed and dated where required.

Bid Submission Checklist

- ☐ Cover Page
- ☐ Reference List (3 Municipalities)
- ☐ Product Catalog or Brochures, if any
- ☐ Estimated Product Quantities & Cost Bid Sheet (Attachment A)
- ☐ Exceptions to Specifications, if any (Attachment B)
- ☐ State Corporation Commission (SCC) Form (Attachment C)
- ☐ Insurance Form (Attachment E)
- ☐ Addenda, if any

VI. QUESTIONS

Questions related to the ITB or requests for clarification may be directed to Ms. Pat Hilliard, Purchasing Agent for the City of Harrsionburg, by email (Purchasing@harrisonburgva.gov) or by fax (540-432-7778). Oral questions will not be permitted. All responses to inquiries will be in writing and will be posted as addenda on the City's website at www.harrisonburgva.gov/bids-proposals and also on eVA at www.eva.virginia.gov. All questions must be received no later than **Tuesday, January 21, 2014 at noon, local time**. It is the responsibility of all Offerors to ensure that they have received all addenda and to include signed copies of any and all addenda with their proposals.

VII. MODIFICATION & WITHDRAWAL OF BID

A bidder may modify or withdraw his bid, either personally or by written request, at any time prior to the scheduled time for opening bids.

Except as provided in 2.2-4330 Code of Virginia, no bidder may withdraw his bid for a period of sixty calendar days after the date set for opening thereof, and bids shall be subject to acceptance by the Owner during this period.

VIII. AWARD OF CONTRACT

The contract will be awarded to the lowest responsive and responsible bidder meeting the applicable specifications. The City reserves the right to reject any and all bids and will further reserve the right to waive or not waive any informality in any bid. The City reserves the right to ask for additional information from the vendor to determine whether a company is responsible. The winning bidder shall submit a W-9 to the City Purchasing Office via email (Purchasing@harrisonburgva.gov) or fax (540-432-7778) within 14 days of contract award.

For the purpose of award, the summation of the products of the estimated quantities herein stated, multiplied by the unit price, and shall be considered the total bid. In case of error, the unit price shall be considered correct in determining Total Bid. Determination of low bidder shall be based on Total Bid (as adjusted, if applicable). The City makes no guarantees of quantities of products ordered. Products will be ordered on an as-needed basis. **The contract will be awarded based upon price of estimated product quantities (TOTAL BID VALUE in Attachment 1) as described above as well as delivery time or anticipated lead time of products quoted as stated in Attachment 1.**

ATTACHMENT A. ESTIMATED PRODUCT QUANTITIES & COST BID SHEET

Bid Number: 2014019-PU-B
Bid Due Date: Tuesday, January 28, 2014 at 3:00pm, local time
Bid Documents Received: 345 S. Main Street, Room 201, Harrisonburg, VA 22801

Product	Unit	Unit Price●	Estimated Quantity*	Vendor Price● ►
4 Foot Diameter Manhole Base	EA		20	
5 Foot Manhole Base	EA		5	
4 Foot Diameter Manhole Cone	EA		15	
5 Foot Diameter Manhole Cone	EA		5	
4 Foot Diameter Manhole Flat Slab Top Unit	EA		5	
5 Foot Diameter Manhole Flat Slab Top Unit	EA		2	
4 Foot Diameter Manhole Riser	PER VERTICAL FOOT		10	
5 Foot Diameter Manhole Riser	PER VERTCIAL FOOT		5	
Bitumastic Black Exterior Coating (FT^2)	GALLON		200	
4 Foot Diameter Manhole Invert Shaping	EA		20	
5 Foot Diameter Manhole Invert Shaping	EA		5	
8 inch Flexible Joint Pipe Connection by Press-Seal Gasket Corporation	EA		50	
			TOTAL BID VALUE:	

** The bid quantities listed on the Bid Form are estimates only and not a guarantee of quantities purchased. There are no guarantees of quantities for amount of products purchased during the life of the contract.*
●Unit Price and Vendor Price is based on delivery of product to 2155 Beery Road, Harrisonburg, VA 22801. Pricing includes delivery cost, FOB Destination.
►Vendor Price shall be the total of the Unit Price multiplied by the Estimated Quantity.

Total Bid Value in Written Format:_____

Delivery Time (from date of order):_____

_____ Signature of Authorized Bidder

_____ Date

_____ Printed Name of Authorized Bidder

_____ Company Name

_____ Title

_____ Company Address

This form must be completed & returned with your bid documents.

ATTACHMENT B. EXCEPTIONS TO SPECIFICATIONS FORM

Any bidder submitting a product or service with an exception to the specification as written in Section 4 shall clearly indentify the exception and provide explanation below.

Specification Reference	Explain the Exception

This form must be completed & returned with your bid documents.

ATTACHMENT C: STATE CORPORATION COMMISSION FORM

Virginia State Corporation Commission ("SCC") registration information:

The undersigned Offeror:

☐ is a corporation or other business entity with the following SCC identification number: _____ **-OR-**

☐ is not a corporation, limited liability company, limited partnership, registered limited liability partnership, or business trust **-OR-**

☐ is an out-of-state business entity that does not regularly and continuously maintain as part of its ordinary and customary business any employees, agents, offices, facilities, or inventories in Virginia (not counting any employees or agents in Virginia who merely solicit orders that require acceptance outside Virginia before they become contracts, and not counting any incidental presence of the Offeror in Virginia that is needed in order to assemble, maintain, and repair goods in accordance with the contracts by which such goods were sold and shipped into Virginia from bidder's out-of-state location) **-OR-**

☐ is an out-of-state business entity that is including with this bid an opinion of legal counsel which accurately and completely discloses the undersigned Offeror's current contacts with Virginia and describes why those contacts do not constitute the transaction of business in Virginia within the meaning of § 13.1-757 or other similar provisions in Titles 13.1 or 50 of the Code of Virginia.

****NOTE**** >> Check the following box if you have not completed any of the foregoing options but currently have pending before the SCC an application for authority to transact business in the Commonwealth of Virginia and wish to be considered for a waiver to allow you to submit the SCC identification number after the due date for proposals (the Commonwealth reserves the right to determine in its sole discretion whether to allow such waiver): ☐

Signature: _____ **Date:** _____

Name: _____
(Print)

Title: _____

Name of Firm: _____

****This form must be completed & returned with your bid documents.****

ATTACHMENT D:
CITY OF HARRISONBURG, VA
STANDARD CONTRACT ITB SAMPLE

This Contract entered into this ___ day of _____ 20___, by _____ hereinafter called the "Contractor" and the City of Harrisonburg, VA, called the "Owner".

WITNESSETH that the Contractor and the Owner, in consideration of the mutual covenants, promises and agreements herein contained, agree as follows:

SCOPE OF CONTRACT: The Contractor shall provide the goods/services to the Owner as set forth in the Contract Documents.

PERIOD OF PERFORMANCE: From _____ through _____.

The contract documents shall consist of:

(1) This signed form;

(2) The entire City of Harrisonburg's Official Invitation to Bid (no revisions by the Contractor)

dated: _____

If applicable, any Official City Addenda(s):

#1, dated: _____

(3) The Contractor's Bid response dated _____ and the negotiated modifications (if applicable) to the Bid, all of which documents are incorporated herein.

IN WITNESS WHEREOF, the parties have caused this Contract to be duly executed intending to be bound thereby.

CONTRACTOR:	CITY OF HARRISONBURG (OWNER):
By: _____	By: _____
Title: _____	Title: _____

ATTACHMENT E: INSURANCE FORM

By signing and submitting a bid or proposal the vendor certifies that if awarded the contract, they will have the following insurance coverages at the time the contract is awarded.

1.) The contractor will maintain a general liability policy with $1,000,000 combined single limits. Coverage is to be on an occurrence basis with an insurer licensed to conduct business in the Commonwealth of Virginia. The insurer must have an A. M. Best rating of A- or better. **The insurer must list the City of Harrisonburg as an additional insured. The endorsement must be issued by the insurance company. A notation on the certificate of insurance is not sufficient.**

2.) The contractor will maintain workers' compensation coverage in compliance with the laws of the Commonwealth of Virginia. The coverage must have statutory limits and be with an insurer licensed to conduct business in the Commonwealth of Virginia. The insurer must have an A. M. Best rating of A- or better. As an alternative, it is acceptable for the contractor to be insured by a group self insurance association that is licensed by the Virginia Bureau of Insurance. The contractor will also carry employers liability insurance with a limit of at least $100,000 bodily injury by accident/$500,000 bodily injury by disease policy limit/$100,000 bodily injury by disease each employee.

3.) The contractor will maintain automobile liability insurance with limits of at least $1,000,000. The coverage is to be written with a symbol "1". The insurer must be licensed to conduct business in the Commonwealth of Virginia. The insurer must have an A. M. Best rating of A- or better.

With all policies listed above, the insurer or agent of the insurer must issue a certificate of insurance to show evidence of coverage.

OFFEROR STATEMENT

We understand the Insurance Requirements of these specifications and will comply in full if awarded this contract.

Signature: _____ Date: _____

Name: _____ Title: _____
(*Print*)

Name of Firm: _____

This form must be completed & returned with your bid documents.

1. MANHOLE TO MEET CURRENT REQUIREMENTS OF ASTM C-478.
2. ALL REINFORCING TO MEET CURRENT REQUIREMENTS OF ASTM A-615.
3. CONCRETE TO BE CLASS A-4.
4. JOINT TO MEET CURRENT REQUIREMENTS OF ASTM C-443.
5. PIONEER 301 MASTIC OR APPROVED EQUAL SHALL BE USED IN ADDITON TO THE JOINT SPECIFIED.
6. INVERT SHAPING TO CONFORM TO CITY STANDARD DETAIL.
7. FLEXIBLE JOINTS, MEETING CURRENT REQUIREMENTS OF ASTM C-923, ARE REQUIRED ON ALL PIPE CONNECTIONS TO MANHOLES. WHERE FIELD CONDITIONS WILL NOT PERMIT THE USE OF A SLEEVE, A MAXIMUM 24" STUB MAY BE USED.
8. JOINT CONFIGURATION MAY BE CAST BELL-UP OR SPIGOT-UP.
9. MANUFACTURER'S NAME TO BE ON INSIDE FACE OF CONE.
10. EXTERIOR OF MANHOLE TO BE ASPHALT-COATED. TWO (2) COATS REQUIRED.

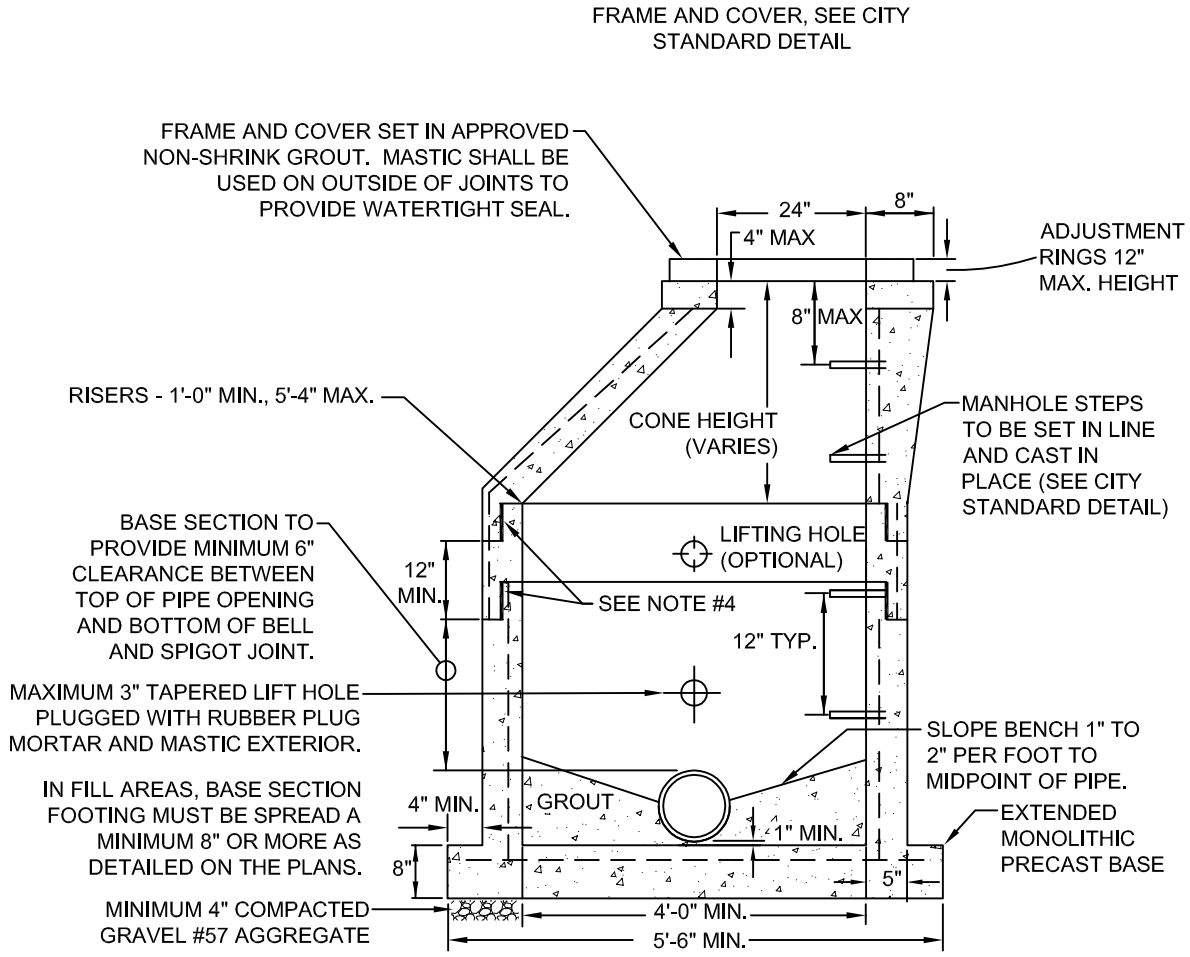

NOT TO SCALE

NO.	DATE	DESCRIPTION	INIT.
1.	7/01/04	2004 D&CSM UPDATE	DHG
2.	05/15/09	UPDATE ASTM REFERENCES	SDC

4'-0" I.D. SANITARY SEWER MANHOLE

DWG. NO 35

PAGE 49

1. MANHOLE TO MEET CURRENT REQUIREMENTS OF ASTM C-478.
2. ALL REINFORCING TO MEET CURRENT REQUIREMENTS OF ASTM A-615.
3. CONCRETE TO BE CLASS A-4.
4. JOINT TO MEET CURRENT REQUIREMENTS OF ASTM C-443.
5. PIONEER 301 MASTIC OR APPROVED EQUAL SHALL BE USED IN ADDITION TO THE JOINT SPECIFIED.
6. INVERT SHAPING TO CONFORM TO CITY STANDARD DETAIL.
7. FLEXIBLE JOINTS, MEETING CURRENT REQUIREMENTS OF ASTM C-923, ARE REQUIRED ON ALL PIPE CONNECTIONS TO MANHOLES. WHERE FIELD CONDITIONS WILL NOT PERMIT THE USE OF A SLEEVE, A MAXIMUM 24" STUB MAY BE USED.
8. JOINT CONFIGURATION MAY BE CAST BELL-UP OR SPIGOT-UP.
9. MANUFACTURER'S NAME TO BE ON INSIDE FACE OF CONE.
10. EXTERIOR OF MANHOLE TO BE ASPHALT-COATED. TWO (2) COATS REQUIRED.

MANHOLE DIMENSIONS

	MANHOLE DIAMETER IN FEET		
DIMENSIONS		5'0"	6'0"
	A	60"	72"
	B	84"	98"
	C	6"	7"
	D	8 MIN.	8 MIN.

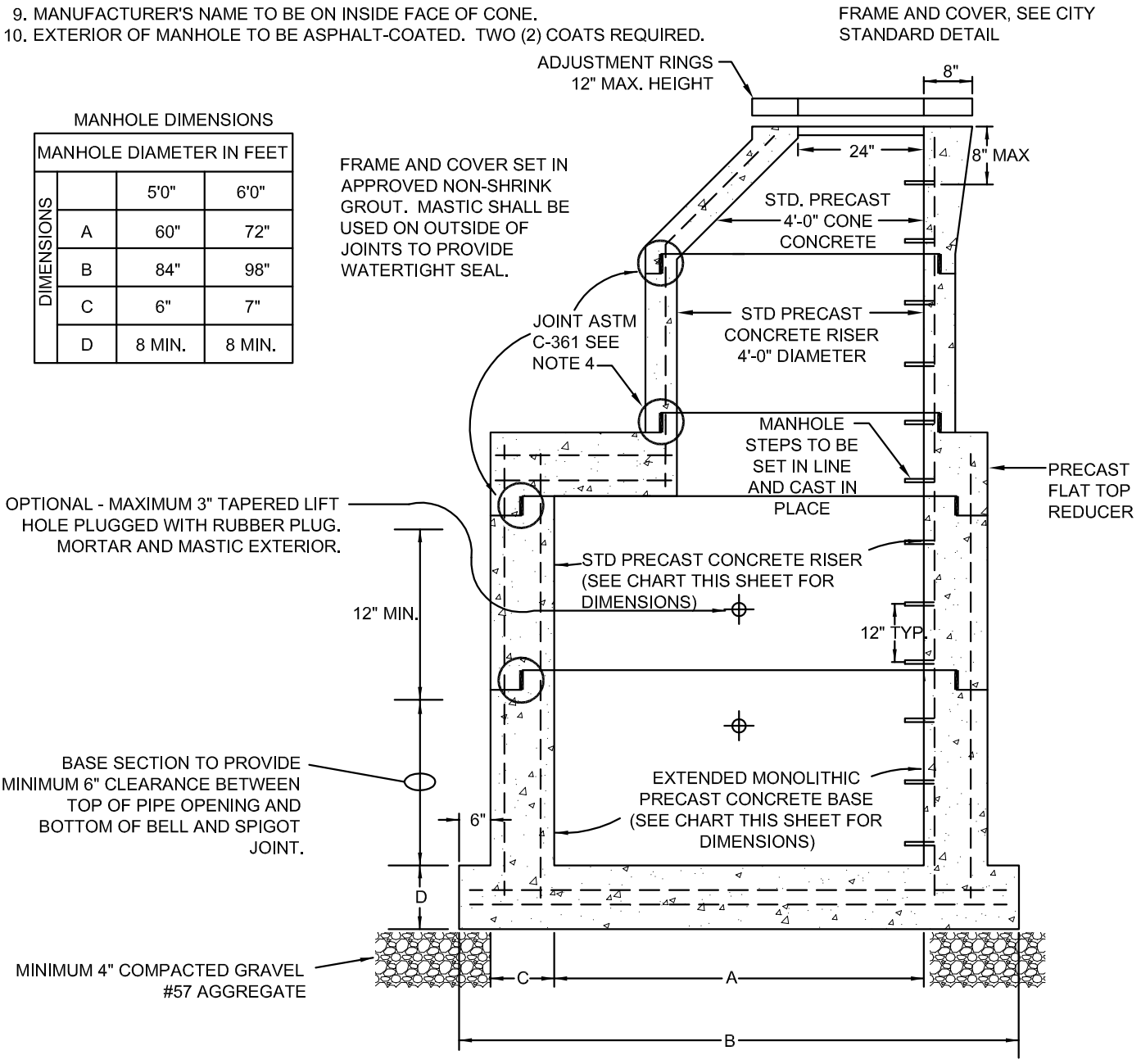

NOT TO SCALE

REVISIONS			
NO.	DATE	DESCRIPTION	INIT.
1.	7/01/04	2004 D&CSM UPDATE	DHG
2.	05/15/09	UPDATE ASTM REFERENCES	SDC

5'-0" AND 6'-0" I.D. SANITARY SEWER MANHOLES

DWG. NO. 36

PAGE 50

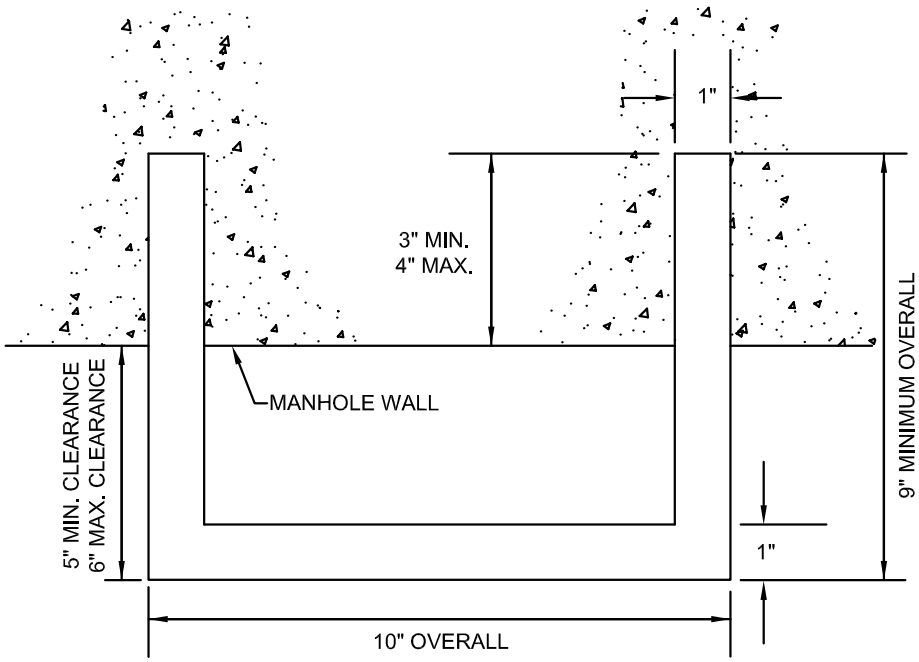

PLAN

NOTES:

1. APPROVED PLASTIC COATED STEEL REINFORCED MANHOLE SAFETY STEP (SEE PUBLIC UTILITIES PRODUCT MANUAL).

2. MANHOLE STEPS TO BE CAST IN PLACE AND ORIENTED IN A SINGLE VERTICAL LINE UNLESS OTHERWISE APPROVED.

NOT TO SCALE

REVISIONS			
NO.	DATE	DESCRIPTION	INIT.
1.	7/01/04	2004 D&CSM UPDATE	DHG

MANHOLE STEP DETAIL

DWG. NO. 39

PAGE 53

NOTES:

1. MANHOLE TO BE FORMED AND CONSTRUCTED IN ACCORDANCE WITH THE APPLICABLE STANDARD OR SPECIAL DRAWING. THE INVERT SHAPING AS DETAILED HEREON IS TO CONSIST OF PORTLAND CEMENT CONCRETE MIX CONFORMING TO CLASS A-3 OR CLASS C-1, EXCEPT THAT 25% OF COURSE AGGREGATE MAY BE UP TO 4" IN DIAMETER AND CONSIST OF STONE, BROKEN BRICK, BROKEN CONCRETE, OR BROKEN CONCRETE BLOCK. THE SURFACE SHALL BE LEFT SMOOTH BY MEANS OF HAND TROWELLING. NONE OF THE COARSE AGGREGATE SHALL REMAIN EXPOSED. BENCHES ARE TO HAVE A LIGHT BROOM FINISH.

2. DETAILS OF INVERT SHAPING AS SHOWN HEREON ARE FOR EXAMPLE PURPOSES ONLY. EACH MANHOLE IS TO BE SHAPED INDIVIDUALLY TO BEST FIT THE PARTICULAR INLET AND OUTLET CONFIGURATION AND FLOW LINES.

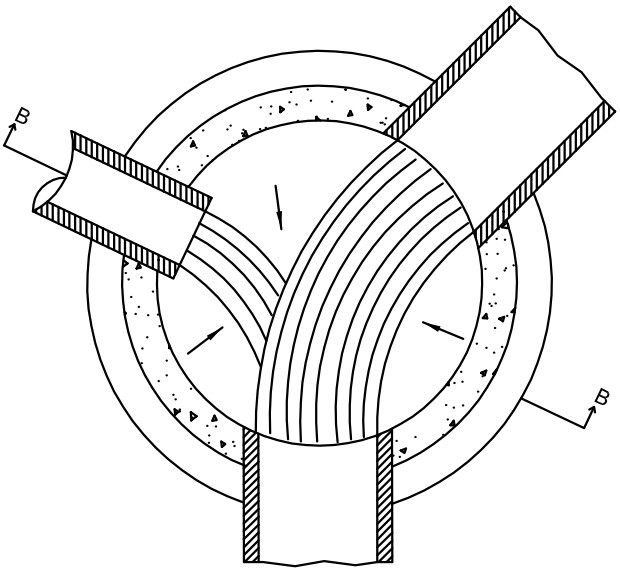

PLAN

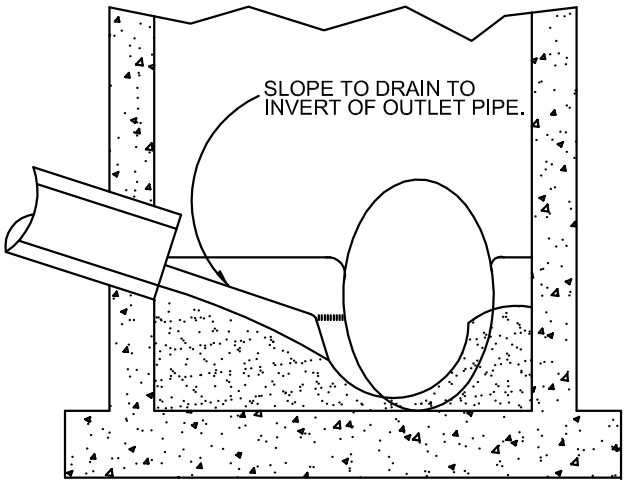

SECTION B-B

NOT TO SCALE

REVISIONS			
NO.	DATE	DESCRIPTION	INIT.
1.	7/01/04	2004 D&CSM UPDATE	SDC

SANITARY SEWER MANHOLE INVERT SHAPING

DWG. NO. 40

PAGE 54

T-MH-2

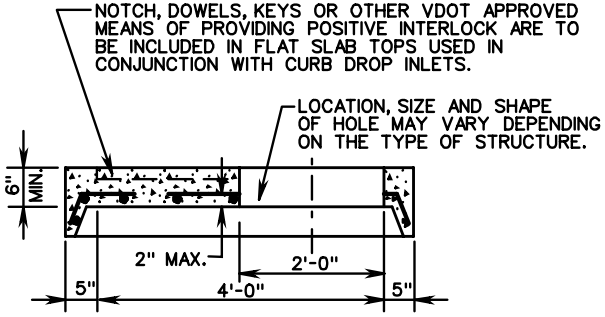

FLAT SLAB TOP UNIT

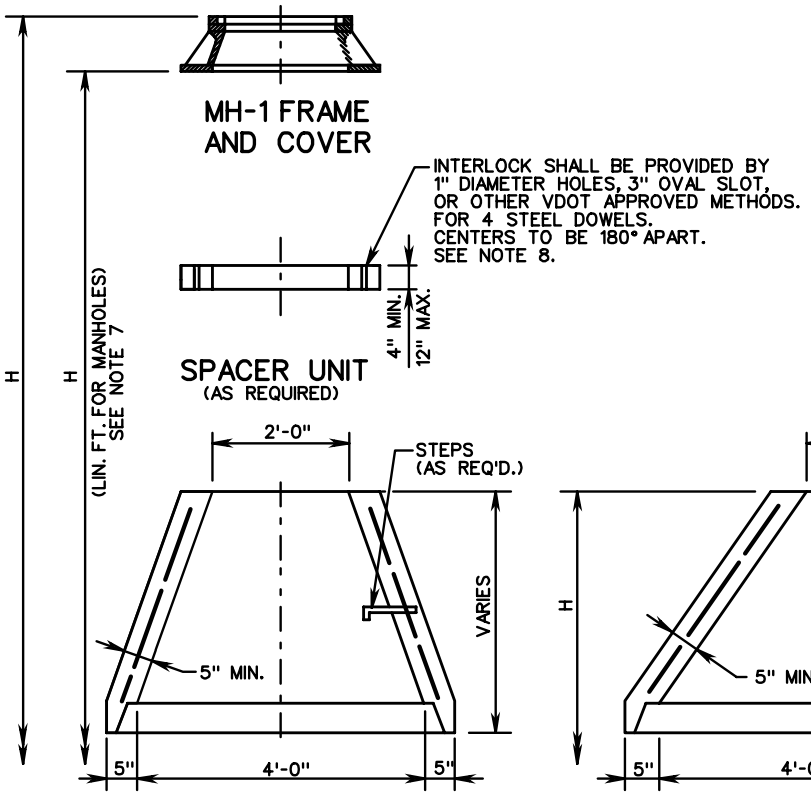

CONCRETE TAPER UNIT

ECCENTRIC TAPER UNIT

NOTES:

1. SEE GENERAL NOTES FOR ADDITIONAL INFORMATION ON WEEP HOLES, STEP REQUIREMENTS, "H" (LIN. FT. FOR MANHOLES) DIMENSION, ETC.
2. ALL SPACER UNITS, FLAT SLAB TOPS, AND TAPER UNITS ARE TO BE IN ACCORDANCE WITH THE REQUIREMENTS OF AASHTO M199.
3. CONCRETE SHALL BE 4000 PSI.
4. FOR STEP DETAILS SEE STANDARD ST-1.
5. DIMENSIONS SHOWN ARE MINIMUM. ACTUAL DIMENSIONS MAY VARY WITH MANUFACTURER.
6. SPACER UNITS SHOWN HEREON ARE ALSO KNOWN AS "GRADE RINGS" OR ADJUSTMENT RINGS".
7. WHEN SPACER UNITS ARE REQUIRED, "H" IS TO BE MEASURED FROM THE TOP OF THE UPPERMOST SPACER.
8. SPACER UNIT IS TO BE DOWELED OR MORTARED TO TAPER UNIT OR FLAT SLAB TOP.

VDOT ROAD AND BRIDGE STANDARDS	STANDARD PRECAST MANHOLE TOP UNITS	SPECIFICATION REFERENCE
SHEET 1 OF 1 / REVISION DATE	VIRGINIA DEPARTMENT OF TRANSPORTATION	105 302
103.09		

City of Harrisonburg, Virginia - Department of Public Utilities

Product Status List

Category	Product	Manufacturer	Model	Restrictions	Specification Reference	Status	Comments
Fire Hydrant	Fire Hydrant (4 1/2" opening)	American Flow Control	MK-73-1		AWWA C502	Rejected	
Fire Hydrant	Fire Hydrant (4 1/2" opening)	Kennedy	Guardian K81A		AWWA C502	Rejected	as of Nov. 1, 2004
Fire Hydrant	Fire Hydrant (4 1/2" opening)	Mueller	Centurian A421		AWWA C502	Rejected	as of Nov. 1, 2004
Fire Hydrant	Fire Hydrant (5 1/4" opening)	American Flow Control	B-84-B		AWWA C502	Approved	Approved on Nov. 1, 2004
Fire Hydrant	Fire Hydrant (5 1/4" opening)	AVK	2780 Series		AWWA C502	Approved	Approved on Nov. 1, 2004
Fire Hydrant	Fire Hydrant (5 1/4" opening)	Kennedy	Guardian K81D		AWWA C502	Approved	Approved on Nov. 1, 2004
Fire Hydrant	Fire Hydrant (5 1/4" opening)	Mueller	Centurian A423		AWWA C502	Approved	Approved on Nov. 1, 2004
Fire Hydrant	Fire Hydrant (6" opening)	American Flow Control	B-84-B		AWWA C502	Rejected	
Frame and Cover	Manhole Frame and Cover	Capitol Foundry	MH-2001	Pavement, Concrete or Other		Probationary	Probationary after May 1, 2007; Deplete Inventory
Frame and Cover	Manhole Frame and Cover	Neenah Foundry	R-1649(Type C Cover)	Not in Pavement or Concrete		Probationary	Probationary after May 1, 2007; Deplete Inventory
Frame and Cover	Manhole Frame and Cover	US Foundry	USF 669 KL	Pavement, Concrete or Other		Probationary	Probationary after May 1, 2007; Deplete Inventory
Frame and Cover	Manhole Frame and Cover	Capitol Foundry	CVB9	For use as Heavy Duty Cleanout		Probationary	Probationary after May 1, 2007; Deplete Inventory
Frame and Cover	Manhole Frame and Cover	Capitol Foundry	MH-3000	With Pick Bars, NO gasket, NO nuts		Approved	
Frame and Cover	Manhole Frame and Cover	US Foundry	USF 710	With Pick Bars, NO gasket, NO nuts		Approved	
Manhole Accessories	Coal Tar Solution Manhole Coating	Porter Paint Company	Tarmastic 100			Approved	
Manhole Accessories	Flexible Pressed Wedge Gasket	Press-Seal Gasket Corporation		Max. 15 degree deflection		Approved	Pipe to manhole connections
Manhole Accessories	Inflow Prevention Device (bowl)	Rainguard				Approved	When mh rim is below 100 yr flood elev
Meter	1-1/2" Water Meter	Metron Farnier	Spectrum 88	By City forces ONLY	AWWA C712	Probationary	2" Flanges
Meter	1 1/2" and 2" Meter w/ touch read	Mueller	562DI & 572DI			Approved	Compound Meter or Fireline Meter
Meter	2" and larger Meter w/ touch read	Sensus	SRH	By City forces ONLY		Probationary	Compound Meter or Fireline Meter
Meter	2" Meter w/ touch read	Sensus	SR	By City forces ONLY		Probationary	Positive Displacement Meter
Meter	2" Water Meter	Metron Farnier	Spectrum 130	By City forces ONLY	AWWA C712	Probationary	2" Flanges
Meter	5/8"x3/4", 1" Meter w/ touch read	Mueller	420	By City forces ONLY		Approved	Compound Meter
Meter	5/8"x3/4", 1" Meter w/ touch read	Sensus	AccuSTREAM	By City forces ONLY		Approved	Compound Meter
Meter	5/8"x3/4", 1" Meter w/ touch read	Sensus	SR II	By City forces ONLY		Probationary	Positive Displacement Meter
Meter	1 1/2" to 10" Turbo meter	Sensus	Omni T2	By City forces ONLY		Probationary	Non-Fireline applications
Meter	1 1/2" to 10" Compound meter	Sensus	Omni C2	By City forces ONLY		Probationary	Non-Fireline applications
Meter	4" - 6" Fireline meter	Sensus	Omni F2	By City forces ONLY		Probationary	Fireline applications
Meter	HbMAG	Mueller	HbMAG	By City forces ONLY		Probationary	
Meter	FM3 with bypass	Mueller	FM3			Approved	Fireline applications (sizes 3" - 10")
Meter	MVR	Mueller	MVR			Rejected	This style meter was intended for applications with high turb
Meter	RFM	Mueller	RFM			Tabled	The UL listing and FM approvals were unclear. The City re
Pipe Accessories	Bolted Flex Pipe Coupling	Ford	FC2A			Approved	
Pipe Accessories	Cleanout Cap & Plug	Panella	PA4XHCSK			Approved	4" XH with countersunk plug
Pipe Accessories	Flexible Manhole Boot	National Pollution Control Systems, Inc.	Kor-n-Seal			Approved	
Pipe Accessories	Flexible Manhole Boot	National Pollution Control Systems, Inc.	Contour-Seal	24" and larger pipe		Approved	
Pipe Accessories	Flexible Rubber Sleeve	Interpace Corp.				Approved	Pipe to manhole connections
Pipe Accessories	Mechanical Restraint	Ebaa Iron	Megalug Series 1100	Mega-Bond coated		Approved	Regular
Pipe Accessories	Mechanical Restraint	Ebaa Iron	Megalug Series 1100S	Mega-Bond coated		Approved	Split Gland
Pipe Accessories	Mechanical Restraint	Romac	Romagrip	Must be Epoxy Coated		Approved	Must be Epoxy Coated
Pipe Accessories	Mechanical Restraint	Ford	Uniflange			Approved	
Pipe Accessories	PVC SDR 21 Gasket	HARCO				Approved	See old DCSM book, ch 7 pg 19
Pipe Accessories	Saddle	Romac	CB4.215			Approved	SDR 21 and Sch 40 PVC
Pipe Accessories	Saddle	Romac	CB4.38			Approved	Cast Iron Soil Pipe
Pipe Accessories	Stainless Steel Tapping Sleeve	Romac	SST	4"-12"	ANSI-16.1, Class 125, MSS SP-60	Probationary	
Pipe Accessories	Straight Pipe Coupling	Fernco				Approved	
Pipe Accessories	Straight Pipe Coupling	Romac	501			Approved	
Pipe Accessories	Straight Pipe Coupling	Smith Blaire	#441			Approved	
Pipe Accessories	Straight Pipe Coupling	Ford	F1	Alloy Bolts		Approved	
Pipe Accessories	Straight Pipe Coupling	Romac	CL1	Alloy Bolts		Approved	
Pipe Accessories	Straight Pipe Coupling	Romac	CL2	Alloy Bolts		Approved	
Pipe Accessories	Tapping Sleeve	American Flow Control	2800 Series	4"-12" Tap Size	ANSI-16.1, Class 125, MSS SP-60	Approved	
Pipe Accessories	Tapping Sleeve	Kennedy	960/F205		ANSI-16.1, Class 125, MSS SP-60	Approved	
Pipe Accessories	Tapping Sleeve	M&H	1174		ANSI-16.1, Class 125, MSS SP-60	Approved	

City of Harrisonburg, Virginia - Department of Public Utilities

Product Status List

Category	Product	Manufacturer	Model	Restrictions	Specification Reference	Status	Comments
Pipe Accessories	Tapping Sleeve	Mueller	H615		ANSI-16.1, Class 125, MSS SP-60	Approved	
Pipe Accessories	Tapping Sleeve	Tyler	5-149 (all ductile iron)	4"-12" Tap Size	ANSI-16.1, Class 125, MSS SP-60	Approved	
Service Accessories	1" Angle Double Check Valve	Ford	HHA91-344			Approved	
Service Accessories	1" Angle Valve	Ford	AV92-444	By City forces ONLY		***Probationary***	Deplete Inventory
Service Accessories	1" Expansion Connector	Ford	EC4			Approved	
Service Accessories	1" Flare Angle Valve	Ford	BA92-444W			Approved	When tested with the main
Service Accessories	1" Flare Coupling	Ford	CS22-44			Approved	
Service Accessories	1" Yoke Bar	Ford	Y504			Approved	
Service Accessories	1" Flare x MIP Straight Connector	Ford	C28-44			Approved	NPT by flare
Service Accessories	1" Flare Coupling	Ford	C22-44			Approved	
Service Accessories	1", 2" Corporation Stop	Ford	FB1600	Intended for ARV installation		Approved	AWWA/CC thread x FIP thread (Ball type)
Service Accessories	1", 2" Curb Stop	Ford	B11-xx (w/ HH 34 or HH 67 handle)	Intended for ARV installation		Approved	FIP thread x FIP thread (Ball type)
Service Accessories	2" Copper Setter	Ford	VBH77			Approved	15x17B with JB81-777 below check valve and check
Service Accessories	2" Curb Stop	Ford	B21-777			Approved	flare by female ip thread ball type
Service Accessories	2" Curb Stop	Ford	B22-777			Approved	flare by flare ball type
Service Accessories	2" Curb Stop Box	Tyler	143R	Arch Base		***Rejected***	See JLL DCSM book, ch 7 pg 13
Service Accessories	2" Flare Coupling	Ford	C22-77			Approved	Flare by flare, 3 piece union
Service Accessories	2" Flare x MIP Straight Connector	Ford	C28-77			Approved	NPT by flare
Service Accessories	2" Tapping Saddle	Ford	FC202			***Probationary***	
Service Accessories	3/4" Angle Double Check Valve	Ford	HHA92-323D			Approved	
Service Accessories	3/4" Angle Double Check Valve	Mueller	H14246A			Approved	
Service Accessories	3/4" Flare Angle Valve	Ford	BA92-323W			Approved	When tested with the main
Service Accessories	3/4" Flare Angle Valve	Mueller	B24264R			Approved	When tested with the main
Service Accessories	3/4" Flare Coupling	Ford	CS22-33			Approved	
Service Accessories	3/4" Threaded Angle Valve	Ford	AV91-323W			***Probationary***	Use with Branch Piece: Deplete Inventory
Service Accessories	3/4", 1" Flare Coupling	Mueller	H15405			Approved	
Service Accessories	3/4", 1" Corp Stop	A.Y. McDonald	4701			Approved	
Service Accessories	3/4", 1" Corp Stop	Mueller	H15000	By City forces ONLY		***Probationary***	Deplete Inventory
Service Accessories	3/4", 1" Flare Stop	Mueller	B25000			Approved	When tested with the main
Service Accessories	3/4", 1", 2" Corporation Stop	Ford	FB600			Approved	AWWA/CC thread x Flare (Ball type)
Service Accessories	3/4", 1", 2" Corporation Stop	Ford	FB700			Approved	MIP thread x Flare (ball type)
Service Accessories	3/4",1" Corp Stop	Ford	F600	By City forces ONLY		***Probationary***	Deplete Inventory (key type)
Service Accessories	5/8"x3/4" Angle Valve	Ford	AV92-323W	By City forces ONLY		***Probationary***	Deplete Inventory
Service Accessories	5/8"x3/4" Angle Valve	Mueller	H14264	By City forces ONLY		***Probationary***	Deplete Inventory
Service Accessories	3/4", 1" Angle Valve	A.Y. McDonald	4602Y			Approved	
Service Accessories	5/8"x3/4" Expansion Connector	Ford	EC23			Approved	
Service Accessories	5/8"x3/4" Expansion Connector	Mueller	H14234			Approved	
Service Accessories	5/8"x3/4" Yoke Bar	Ford	Y502			Approved	
Service Accessories	5/8"x3/4" Yoke Bar	Mueller	H5020			Approved	
Service Accessories	3/4" Yoke bar	A.Y. McDonald	14-2			Approved	
Service Accessories	1" Yoke Bar	A.Y. McDonald	14-4			Approved	
Service Accessories	Double Meter Branch Fitting	Ford	U28-43			Approved	1"x3/4"x3/4" w/ 6 1/2" width (also permit 7 1/2")
Service Accessories	Double Meter Branch Fitting	Mueller	H15362			Approved	1"x3/4"x3/4" w/ 6 1/2" width (also permit 7 1/2")
Service Accessories	Double Meter Tee Fitting	Ford	T222-334			Approved	1"x3/4"x3/4"
Service Accessories	Double Meter Tee Fitting	Mueller	H15380			Approved	1"x3/4"x3/4"
Service Accessories	Flare x Thread Angle Valve	Ford	BA91-323W			Approved	When tested with the main
Service Accessories	Meter Box	Ford	Ironcrete #1-1/2			Approved	
Service Accessories	Meter Box	Ford	Ironcrete #2			Approved	
Service Accessories	Meter Box Lid	Ford	A-32	Non-traffic areas ONLY		Approved	
Service Accessories	Meter Box Lid	Ford	A-32T			Approved	Traffic Rated
Service Accessories	Plastic Meter Box	Carson	18B inverted	Min. 20,000 lb. vert. crush strength		Approved	18" top x 24" bottom x 20" depth
Service Accessories	Plastic Meter Box	Carson	0018-MAX			Approved	bullet box
Valve	Air/Vacuum Valve	Empire General	Spec. 930			Approved	
Valve	Air/Vacuum Valve	G.A. Industries	F16	1" & 2"		Approved	
Valve	Air/Vacuum Valve	Valmatic	201C/202C			Approved	
Valve	Air/Vacuum Valve	CLA-VAL	Series 36				

24 | Page
Precast Sanitary Sewer Manholes ITB (2014019-PU-B)
ATTACHMENT K

City of Harrisonburg, Virginia - Department of Public Utilities

Product Status List

Category	Product	Manufacturer	Model	Restrictions	Specification Reference	Status	Comments
Valve	Air/Vacuum Valve	Valve and Primer Corp.	APCO 143C/145C			Approved	
Valve	Butterfly Valve	Kennedy	Adap-Torq	16" and larger	AWWA C504	Approved	
Valve	Butterfly Valve	Mueller	Lineseal III	16" and larger	AWWA C504	Approved	
Valve	Double Disc Gate Valve	Kennedy	1571X	Less than 16"	AWWA C500	Approved	
Valve	Double Disc Gate Valve	Mueller	A2380-20	Less than 16"	AWWA C500	Approved	
Valve	Double Disc Tapping Valve	Mueller	H667		AWWA C500 & C509	***Probationary***	
Valve	Resilient Seat Gate Valve	Kennedy	8571	Less than 16"	AWWA C509	Approved	
Valve	Resilient Seat Gate Valve	Mueller	A2370-20	Less than 16"	AWWA C509	Approved	
Valve	Resilient Seat Gate Valve	Mueller	A2360-20	Less than 16"	AWWA C509	Approved	
Valve	Resilient Seat Wedge Valve	American Flow Control	2500 Series	Less than 16"	AWWA C509	Approved	
Valve	Resilient Wedge Tapping Valve	American Flow Control	2500 Series	4"-12" Tap Size	AWWA C500 & C509	Approved	
Valve	Resilient Wedge Tapping Valve	Kennedy	8950	4"-12" Tap Size	AWWA C500 & C509	Approved	
Valve	Resilient Wedge Tapping Valve	M&H	4754	4"-12" Tap Size	AWWA C500 & C509	Approved	
Valve	Resilient Wedge Tapping Valve	Mueller	T2360		AWWA C500 & C509	Approved	
Valve Accessories	Sliding Valve Box	Bingham-Taylor	Fig. No. 4908	Pavement, Concrete or Other	Cast Iron ASTM A-48, sliding only	Approved	
Valve Accessories	Sliding Valve Box	Capitol Foundry	562-A	Pavement, Concrete or Other	Cast Iron ASTM A-48, sliding only	Approved	
Valve Accessories	Sliding Valve Box	Tyler	562-A	Other than Pavement or Concrete	Cast Iron ASTM A-48, sliding only	Approved	

City of Harrisonburg, Virginia

Public Utilities Department

Public Utilities Product Manual

(Latest Revision February 12, 2008)

Introduction

The City of Harrisonburg's "Public Utilities Product Manual" is intended for the benefit of Developers, Engineers and Contractors to identify products approved by the City for use within the water and sanitary sewer distribution and collection systems. The manual identifies specifications for products and materials approved for use within the City. Products approved by the Public Utilities Department "Product Review Committee" shall be listed in the product manual. The City of Harrisonburg has established the Committee to review products proposed for use within the City's water and sewer systems. The manual also outlines the procedures for submitting new products for consideration for use within the City's systems.

The Product Review Committee is committed to meeting to review specific products. The products under review shall be prioritized as deemed necessary by the committee to meet the City's needs. The Committee intends to review products based on price, availability, vendor history, stock space, shelf life, reliability, durability, ease of installation, compatibility, simplicity, initial cost, life-cycle cost, conformance with standards, vendor service and technical assistance and references.

The City reserves the right to accept or reject any product and to change material specifications as deemed appropriate and in the best interest of the City. Products reviewed by the committee will be determined to be either, accepted, rejected or accepted for probationary use. The City reserves the right to change the status of any product at any time to protect the City's interest.

A product given an approved status is accepted for installation into the City's system. A product given a probationary status may only be installed by City forces. A product given a rejected status may not be installed in the City's system.

Products having a probationary status may be resubmitted to the Committee for consideration for accepted status pending proper documentation of resolutions of those deficiencies which caused the probationary status. Such resubmittals may be considered partial reviews by the Committee and may waive formalities. Products given a rejected status by the Committee may be resubmitted as a new product with documentation specifically addressing those deficiencies which caused the rejected status.

Product Submittal Forms shall be attached with each submittal to the Product Review Committee. Copies of the form may be obtained through the City's Warehouse Manager who can be reached at (540) 437-4400.

The manual includes a copy of the Product Review Process, which outlines the proper steps for submittal and review of new products. The product manual also contains the specifications which approved products must meet, and also a list of those products which have been approved for use within the City's water and sanitary sewer distribution and collection systems.

The product manual will be updated as products are added or removed from approved status. The Public Utilities Department will attempt to notify those who hold a copy of the manual of all updates, however, it is the responsibility of the persons holding a copy of the manual to ensure the accuracy of their copy.

Any questions concerning the submittal or review process shall be addressed to the Public Utilities engineering department at (540) 434-9959.

Approved Product Specifications

All products approved for use within the City's water and sanitary sewer systems shall meet the following technical criteria as well as any additional requirements determined applicable by the City's Department of Public Utilities.

1.0 <u>Water Distribution</u>

(1.1) Pipe

(1.1.1) Ductile Iron Pipe Class 52 (Class 51 and or pressure class pipe permitted for sizes greater than 12" pending approval by the Director) Pipe shall be centrifugally cast conforming to ANSI/AWWA, C 151/A21.51. Pipe interior shall be cement-lined with bituminous seal coating conforming to ANSI/AWWA, C 104/A21.4. Pipe fittings shall be mechanical joint type conforming to ANSI/AWWA, C 110/A21.10. Compact fittings shall be ductile iron mechanical joint type conforming to ANSI/AWWA, C 153/A21.53. Joints used for ductile iron pipe and fittings shall be rubber gasketed conforming to ANSI/AWWA, C 111/A21.11. Gaskets shall be plain rubber, of heavy section and high durometer, single molded. The lubricant shall be non-toxic, tasteless, odorless grease that will not support bacteria and shall meet or exceed AWWA standards and/or those of the National Sanitation Foundation. The exterior pipe and fitting coating shall be a bituminous coating conforming to ANSI/AWWA, C 151/A21.51.

Mechanical joint, flexible restrained joint, rigid restrained joint, 15 degree deflection joint pipe and/or compact fittings may be approved for specific application as required by the Director.

(1.1.2) Pipe Restraints

(1.1.2.1) Mechanical pipe restraints shall be constructed of grade 65-45-12 ductile iron meeting ASTM A536 and shall come equipped with torque limiting twist off nuts. The follower gland and gasket shall meet the applicable requirements of ANSI/AWWA, C 110/A21.10 and ANSI/AWWA, C 111/A21.11. Glands shall be fusion bonded epoxy coated or approved equal.

(1.1.2.2) Non-mechanical pipe restraints shall require case-by-case review.

(1.2) Valves

(1.2.1) Valves shall be counterclockwise-open with a 2" operating nut, non-rising stem and epoxy interior. Valve trim hardware (such as nuts and bolts, excluding T-head bolts) on buried water valves shall be stainless steel.

(1.2.2) Gate Valves – Resilient-seated gate valves shall conform to AWWA C 509. Metal-seated gate valves shall conform to AWWA C 500 and be used only where approved by the Director. Gate valves 16" and larger shall require submittal to the Director for approval.

(1.2.3) Tapping Valves - Resilient-seated tapping valves shall conform to AWWA C 509. Metal-seated tapping valves shall conform to AWWA C 500 and be used only where approved by the Director. Tapping valves 16" and larger shall require submittal to the Director for approval.

(1.2.4) Butterfly Valves – shall conform to AWWA C 504. Butterfly valves shall require submittal to the Director for approval.

(1.2.5) Check Valves – shall conform to AWWA C 508.

(1.2.6) Air/Vacuum Valves - Air/vacuum valves and combination valves shall conform to AWWA C 512.

(1.2.7) Epoxy Coatings – shall conform to AWWA C 550

(1.2.8) Power Actuators – shall conform to AWWA C 540

(1.3) Hydrants

(1.3.1) Fire hydrants shall meet AWWA C-502 with dry barrel and breakaway top. Hydrants shall be red as provided by each approved manufacturer. Hardware (such as nuts and bolts) below ground shall be stainless steel.

(1.4) Tapping Sleeves – shall be ductile iron with outlet flange dimensions and drilling that comply with ANSI-B16.1, Class 125, and with MSS SP-60 and certified to ANSI/NSF 61.

(1.5) Valve Boxes – shall be cast iron conforming to ASTM A-48 – sliding type ONLY.

(1.6) Pipe Couplings

(1.6.1) Straight couplings shall fit the outside pipe diameter as applicable. Contractors are advised of the City's inventory of cast iron pipe.

(1.6.2) Sleeve shall be ductile iron meeting ASTM A 536. Ends shall have smooth inside taper for uniform gasket seating.

(1.6.3) Gasket shall be grade 30, standard.

(1.6.4) Follower flanges shall be ductile iron meeting ASTM A 536.

(1.6.5) Nuts and bolts shall, at a minimum, be high strength low alloy steel with heavy, semi-finished hexagon nuts meeting ANSI/AWWA, C 111/A-21.11.

(1.6.6) Finish to be shopcoated enamel.

(1.7) Water Services 2" and smaller

This section addresses materials and products acceptable for use in public rights-of-way and easements only. Construction on private property, beyond these limits, is governed by the Virginia Uniform Statewide Building Code.

(1.7.1) Allowable pipe and appurtenance sizes – 3/4", 1" and 2"

(1.7.2) Service lines shall be type "K" copper tubing conforming to ASTM B 88.

(1.7.3) Pipe nipples shall be threaded brass meeting ASTM B 687.

(1.7.4) Underground service line valves and fittings shall conform to ANSI/AWWA C 800 and ASTM B 62 or ASTM B 584 and shall be manufactured from UNS Copper Alloy C83600. Products shall be certified ANSI/NSF Standard 61 approved.

- Valves and fittings shall be 85-5-5-5 brass.
- Valves shall be ball type.
- Field joints to be flared or threaded.
- Double meter branch fitting shall be 1"x3/4"x3/4" with either 6 1/2" or 7 1/2" width.
- Angle check valve to be double check type.

(1.7.5) Setters

(1.7.5.1) 3/4" and 1" yokes – shall be iron

(1.7.5.2) 2" vertical setters shall:

- be constructed of 85-5-5-5 brass (AWWA C 800) and copper tubing (ASTM B 88)
- be built and pressure tested by the manufacturer prior to shipment
- provide 16" vertical rise of 2" line with approved mechanism to prevent overturning
- accommodate 17" meter laying length with ability to adjust setter length for shorter meters

- include an integral 1" bypass line with a lockable ball valve
- have 2" female iron pipe thread inlet and outlet connections
- have an inlet valve which is 2" flanged angle ball valve, lockable
- have a 2" flanged angle check valve adjacent to the meter outlet
- have inlet and check valves designed to support the meter during bolting
- have a 2" outlet ball valve with handle located in line between the check valve and the setter outlet
- have a plugged test port located between the meter and the outlet ball valve
- be used for the installation of 1-1/2" and 2" meters

(1.7.5.3) 2" horizontal setters may be permitted provided that they include similar components and meet the intended function accommodated by the 2" vertical setters

(1.8) Water Services Larger than 2"

This section addresses materials and products acceptable for use in public rights-of-way and easements only. Construction on private property, beyond these limits, is governed by the Virginia Uniform Statewide Building Code.

(1.8.1) Water pipe and fittings shall be ductile iron conforming to standards established above for water mains and appurtenances.

(1.9) Water Meters

(1.9.1) Positive Displacement meters – shall conform to AWWA C 700.

(1.9.2) Turbine meters – shall conform to AWWA C 701.

(1.9.3) Compound meters - shall conform to AWWA C 702.

(1.9.4) Fire Service meters - shall conform to AWWA C 703.

(1.9.5) Registration systems - shall conform to AWWA C 706 or C 707.

(1.9.6) Single Jet meters - shall conform to AWWA C 712.

(1.9.7) Water meters for use in Fire Services:

A. Shall meet the requirements of AWWA C703
B. Shall be UL Listed
C. Shall meet NFPA 13 and/or 13R
D. Shall be approved by the Fire Marshal

E. Shall be either:
   - Turbine
   - Single Jet
   - Multi-Jet

F. Positive Displacment Meters shall NOT be used for fire service applications.

(1.10) Meter boxes and vaults shall be designed:

- for HS 20 traffic load rating. Light traffic designs may be considered where the specific application insures the absence of vehicular loading.
- to withstand dead loads such as earth pressure on the sides.
- to withstand hydraulic pressures on the interior and/or exterior
- to prevent freezing of the contents
- of corrosion-resistant materials and/or protected by factory applied corrosion-control coatings.
- to accommodate the use of confined space equipment.
- to provide adequate access for maintenance and normal operations as defined by the Director.
- with an open bottom to prevent flotation and allow drainage.
- to accommodate the installation of meter touch-read pads.
- to indicate "Water" on the cover.
- to generally conform to typical details provided in Chapter 7 of the Design and Construction Standards Manual.

2.0 <u>Sanitary Sewer</u>

(2.1) Gravity Sanitary Sewers (12" and less)

(2.1.1) Ductile Iron Pipe Class 51 – Pipe and fittings shall be centrifugally cast conforming to ANSI/AWWA, C-151/A21.51 and ANSI/AWWA, C-110/A21.10, respectively. Pipe interior shall be cement-lined with bituminous seal coating conforming to ANSI/AWWA, C104/A21.4. Joints used for ductile iron pipe shall be rubber gasket push-on type (slip joint) conforming to ANSI/AWWA, C110/A21.11 or mechanical joint conforming to ANSI/AWWA C-111/A21.11 (mechanical and restrained joint). Gaskets shall be plain rubber, of heavy section and high durometer, single molded. The lubricant shall be non-toxic, tasteless, odorless grease that will not support bacteria and shall meet or exceed AWWA standards and/or those of the National Sanitation Foundation. The exterior coating shall be a bituminous coating conforming to ANSI/AWWA, C-151/A21.5.

Restrained joint ductile iron pipe shall utilize a low alloy, high strength steel ring, factory-welded onto plain end of pipe to provide positive restraint against joint separation when retaining ring and lock ring are in place.

(2.1.2) Polyvinyl Chloride (PVC) – SDR 35

PVC plastic sewer pipe and fittings shall meet the requirement of ASTM D3034 and Uni-Bell Uni-B4. The standard dimension ratio (SDR) of all pipe and fittings shall not exceed SDR 35 unless otherwise specified. All joints shall be of the bell and spigot type and conform to ASTM D3212 and/or Uni-Bell Uni-B-1. Gaskets shall be in accordance with ASTM F477. All bells shall be formed integrally with the pipe and shall contain a factory installed elastomeric gasket.

(2.1.3) Polyvinyl Chloride (PVC) SDR 26

PVC plastic sewer pipe and fittings shall meet the requirement of ASTM D3034 and Uni-Bell Uni-B4. The standard dimension ratio (SDR) of all pipe and fittings shall not exceed SDR 26 unless otherwise specified. All joints shall be of the bell and spigot type and conform to ASTM D3212 and/or Uni-Bell Uni-B-1. Gaskets shall be in accordance with ASTM F477. All bells shall be formed integrally with the pipe and shall contain a factory installed elastomeric gasket.

(2.1.4) HDPE (High Density Polyethylene)

Polyethylene plastic pipe shall be high-density polyethylene pipe and meet the applicable requirements of ASTM F714 or AWWA C906. Pipe and fitting materials shall conform to ASTM D3350. Dimension ratio shall be approved on a case by case basis for each project. Pipe joints shall be heat fused in accordance with ASTM D2657.

(2.2) Gravity Sanitary Sewers (larger than 12”)

(2.2.1) Ductile Iron pipe shall comply with specifications for 12” and less sewer pipe above.

(2.2.2) Reinforced Concrete Pipe (RCP)

Reinforced concrete pipe (RCP) shall meet requirements of ASTM C76. Pipe end shall have O-ring gasket groove provided during manufacturing process. Rubber gasket and joints shall meet requirements of ASTM C443. Gaskets shall be O-ring type. Pipe shall have an interior protective coating of an approved coal tar solution. The strength class design will be reviewed on a case-by-case basis.

(2.2.3) PVC – Large Diameter

Case-by-case review.

(2.2.4) HDPE (High Density Polyethylene)

Polyethylene plastic pipe shall comply with specifications for 12" and less sewer pipe above.

(2.3) Force Main Pressure Pipe – Ductile iron force main pressure pipes shall meet water main specifications. PVC and HDPE pressure pipe may be considered on a case-by-case basis.

(2.4) Manholes and related accessories

(2.4.1) Units shall be pre-cast concrete of 4,000 PSI minimum strength with manhole conforming to ASTM specifications C 478. Sections shall have gaskets meeting ASTM C 443. All reinforcing shall meet ASTM C 478.

(2.4.2) Protective coating for concrete manhole section exterior shall be two coats of an approved blend of asphalt, gilsonite and petroleum spirits. Product shall not contain any materials listed by OSHA, NTP or IARC as carcinogens.

(2.4.3) Manhole steps shall be grade 60 steel reinforcing bar (1/2" diameter minimum) encapsulated with copolymer polypropylene. Steps shall meet or exceed ASTM C 478. Steel bar shall conform to ASTM C 615. Copolymer polypropylene shall conform to ASTM D 4104. Horizontal pull out force shall exceed 1,500 lbf.

(2.4.4) Manhole frame and cover castings shall be of Gray Cast Iron meeting requirements of ASTM A-48, Class 30, and shall meet VDOT 16,000 wheel load requirements. Castings shall be free from holes and shrinkage, which lessen the appearance or design. Castings shall be manufactured with a tolerance of no greater than 1/16 of one inch. Bearing surfaces of frames and covers shall be machined to ensure proper fit and prevent rattling. Manhole frames shall have a 24" diameter clear opening. Each cover shall have cast or embossed on it in letters not less than 1 inch high "SANITARY SEWER".

(2.4.4.1) Manhole inflow protector covers to prevent significant infiltration and inflow from entering the sanitary sewer shall be manufactured from corrosion proof material suitable for atmospheres containing hydrogen sulfide and diluted sulfuric acid as well as any other gasses associated with wastewater collection systems. The inflow protector shall be manufactured to fit the manhole frame rim upon which the manhole cover rests. The inflow protector shall be equipped with a seat gasket, lift strap and a relief valve. The

relief valve shall be designed to relieve sewer gases at a pressure of 0.5 to 1.5 pounds and shall have a leak down rate not exceeding 10 gallons / 24 hours to prevent ponding of water over the manhole cover.

(2.4.5) Flexible pipe connectors shall be designed to meet or exceed requirements of ASTM C 923. Pipe to manhole connection shall be sealed with a flexible boot, gasket, sleeve, or as detailed on drawings. The flexible boot shall be a 3/8 inch thick neoprene compound meeting ASTM C443 specifications. The boot shall be secured to the port with an internal aluminum expanding band and to the pipe with a nonmagnetic, corrosion resistant steel external band. When a gasket is used, the gasket shall be a rubber pressed wedge gasket cast into the manhole with a maximum deflection of 15 degrees. When a sleeve is used, the sleeve shall be a flexible rubber sleeve cast into the manhole complete with stainless steel strap.

(2.5) Sanitary sewer lateral pipe and fittings

This section addresses materials and products acceptable for use in public rights-of-way and easements only. Construction on private property, beyond these limits, is governed by the Virginia Uniform Statewide Building Code.

(2.5.1) 4" and 6" lateral materials:

- PVC SDR 26 meeting the standards for mains as outlined above
- Ductile Iron meeting the standards for mains as outlined above
- Cast Iron Soil Pipe in conformance with CISPI 301

(2.5.2) Materials for laterals larger than 6"

- Laterals larger than 6" shall conform to material specifications for sanitary sewer mains.

(2.5.3) Cleanout Plug - 4-inch with cast iron countersunk brass plug. Plastic plugs are *NOT* permitted.

(2.5.4) Frame and lid to protect cleanout plugs in traffic areas – shall meet the casting and load requirements specified under manhole frame and covers. Dimensions of the frame and cover shall conform to the "Heavy Duty Sanitary Lateral Clean-out" detail in Chapter 7 of the Design and Construction Standards Manual.