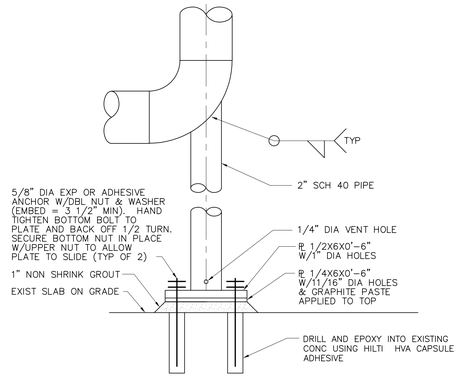

NOTE:
PIPE SLIDE SUPPORT SHALL BE ALLOWED TO MOVE FOR PIPE EXPANSION. DO NOT ANCHOR BASE PLATE TO FLOOR. LOCATE ANCHOR BOLTS IN THE CENTER OF THE BASE PLATE HOLES.

ELEVATION VIEW

PIPE SLIDE SUPPORT DETAIL (A / M-101)
NOT TO SCALE

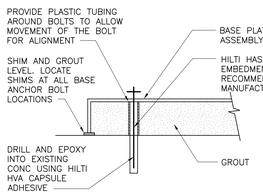

NOTES:
1. GROUT THE SPACE BETWEEN THE CONCRETE FOUNDATION AND THE BASE PLATE ASSEMBLY WITH NON-SHRINK GROUTING CEMENT PER PUMP MANUFACTURER'S RECOMMENDATIONS.
2. INSTALL PUMP BASE PER PUMP MANUFACTURER'S RECOMMENDATIONS

FEEDWATER PUMP ANCHOR DETAIL (B / M-101)
NOT TO SCALE

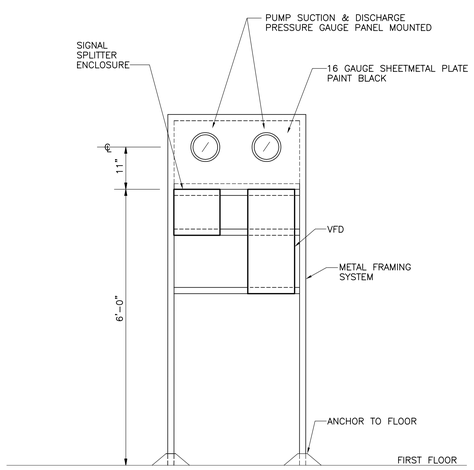

NOTES:
1. COORDINATE MOUNTING HEIGHTS WITH OWNER.
2. DETAIL SIMILAR FOR P-22, EXCEPT SIGNAL SPLITTER ENCLOSURE IS NOT REQUIRED AND CENTER THE VFD ON METAL FRAMING.

P-21 VFD & PRESSURE GAUGE MOUNTING DETAIL (C / M-101)
NOT TO SCALE

ABBREVIATIONS:

A/B	ALLEN BRADLEY
ABAN	ABANDONED
AC	AIR COMPRESSOR
AFF	ABOVE FINISHED FLOOR
ATMOS	ATMOSPHERE
BFD	BOILER FEED WATER DISCHARGE
BFS	BOILER FEED WATER SUCTION
BOS	BOTTOM OF STEEL
CA	COMPRESSED AIR
CBD	CONTINUOUS BLOW DOWN
CDWR	CONDENSER WATER RETURN
CDWS	CONDENSER WATER SUPPLY
CLR	COOLING WATER RETURN
CLS	COOLING WATER SUPPLY
COND	CONDENSATE
CONT	CONTINUATION
CR	CONDENSATE RETURN
CRU	CONDENSATE RETURN UNIT
CWP	CHILLED WATER PUMP
CWR	CHILLED WATER RETURN
CWS	CHILLED WATER SUPPLY
D	DRAIN
DA	DEAERATOR
DBL	DOUBLE
DEG	DEGREE
DIA	DIAMETER
DN	DOWN
DWG(S)	DRAWING(S)
EL	ELEVATION
ES	ELECTRIC POWER SUPPLY
EXIST	EXISTING
(E)	EXISTING
EXP	EXPANSION
F	FAHRENHEIT
FC	FAIL CLOSE/FLOW CONTROL
FCV	FLOW CONTROL VALVE
FD	FLOOR DRAIN
FE	FLOW ELEMENT
FF	FINISHED FLOOR
FI	FLOW INDICATOR
FIC	FLOW INDICATING CONTROL
FIN	FINISHED
FIT	FLOW INDICATING TRANSMITTER
FL	FLOOR
FO	FAIL OPEN/FLOW ORIFICE
FT	FEET/FLOW TRANSMITTER
FY	FLOW I/P
GA	GAUGE
GPM	GALLONS PER MINUTE
H	PIPE HANGER
HC	HAND CONTROL
HOA	HAND-OFF-AUTO
HORIZ	HORIZONTAL
HP	HORSE POWER/HIGH PRESSURE
HPC	HIGH PRESSURE CONDENSATE
HPS	HIGH PRESSURE STEAM
HS	HAND SWITCH
HX	HEAT EXCHANGER
IA	INSTRUMENT AIR
IIC	CURRENT INDICATING CONTROL
IN	INCH
I/O	INPUT/OUTPUT
I/P	CURRENT TO PNEUMATIC TRANSDUCER
ISL	CURRENT SENSOR LOW
JS	MOTOR STARTER
LC	LEVEL CONTROL
LCV	LEVEL CONTROL VALVE
LPC	LOW PRESSURE CONDENSATE
LPS	LOW PRESSURE STEAM
MAX	MAXIMUM
MCC	MOTOR CONTROL CENTER
MECH	MECHANICAL
MIN	MINIMUM
NC	NORMALLY CLOSED
NG	NATURAL GAS
NO	NORMALLY OPEN/NUMBER
NPSHR	NET POSITIVE SUCTION HEAD REQUIRED
P	PUMP
PI	PRESSURE INDICATOR
PIT	PRESSURE INDICATING TRANSMITTER
PLC	PROGRAMMABLE LOGIC CONTROLLER
PR	PUMPED CONDENSATE RETURN
PRV	PRESSURE RELIEF VALVE
PSI	POUNDS PER SQUARE INCH
PSIG	POUNDS PER SQUARE INCH GAUGE
RECIRC	RECIRCULATION
RPM	REVOLUTIONS PER MINUTE
RRF	RESOURCE RECOVERY FACILITY
S	PIPE SUPPORT
SH	SPRING PIPE HANGER
SIC	SPEED INDICATING CONTROL
TEMP	TEMPERATURE
TNK	TANK
TYP	TYPICAL
V	VOLTS
VFD	VARIABLE FREQUENCY DRIVE
VTR	VENT THROUGH ROOF
XA	FAULT ALARM
ZI	POSITION INDICATOR
@	AT
℄	CENTERLINE
#	POUND

LEGEND

- LIMIT OF REMOVAL
- CONNECTION POINT NEW TO EXISTING
- XX/XX LOCALLY MOUNTED INSTRUMENT
- XX/XX REMOTE CONTROL PANEL MOUNTED INSTRUMENT
- XX/XX DIRECT DIGITAL CONTROL HARDWARE AND SOFTWARE FUNCTION BLOCK
- PNEUMATIC SIGNAL
- ELECTRIC SIGNAL
- ELECTRIC POWER
- ELECTRIC INTERLOCK
- 2-WAY CONTROL VALVE
- GATE VALVE
- GLOBE VALVE
- FLANGED CONNECTION
- UNION
- FLOW ORIFICE
- PIPE CAP
- NEEDLE VALVE
- PIPE TURNING UP
- PIPE TURNING DOWN
- IA INSTRUMENT AIR
- I/P CURRENT TO PNEUMATIC TRANSDUCER
- CONCENTRIC REDUCER
- ECCENTRIC REDUCER
- M ELECTRIC MOTOR
- STRAINER W/ BLOWDOWN VALVE AND HOSE END CONNECTION
- CHECK VALVE
- T STEAM TRAP
- TO BE REMOVED (DEMOLITION)
- DRAWING NOTE
- 1 ELECTRICAL INTERLOCK

GENERAL NOTES:

1. THE COMPLETED INSTALLATION SHALL CONFORM TO ALL APPLICABLE CODES, ORDINANCES AND THE VIRGINIA STATEWIDE BUILDING CODE.
2. THE MECHANICAL CONTRACTOR SHALL PROVIDE ALL REQUIRED MATERIAL, LABOR, TOOLS, EQUIPMENT AND SUPERVISION FOR A COMPLETE INSTALLATION.
3. THE CONTRACTOR SHALL OBSERVE THE OWNER'S SAFETY REQUIREMENTS.
4. THE MECHANICAL CONTRACTOR SHALL DEMONSTRATE THE USE OF THE INSTALLED EQUIPMENT TO THE OWNER TO SATISFY THAT ALL EQUIPMENT IS IN-PLACE AND OPERATING AS INTENDED.
5. LABEL EQUIPMENT, PIPING AND CONTROL DEVICES AS SPECIFIED.
6. INSTALL ALL EQUIPMENT AND MATERIALS ACCORDING TO MANUFACTURERS INSTRUCTIONS UNLESS OTHERWISE INDICATED.
7. CONTRACTOR TO FIELD VERIFY ALL PIPING AND EQUIPMENT LOCATIONS AND SIZES.
8. ALL MATERIAL AND EQUIPMENT SHALL BE NEW UNLESS NOTED AS (E), EXIST, OR EXISTING.
9. THESE DRAWINGS ARE SCHEMATIC IN NATURE AND INDICATE THE GENERAL AND APPROXIMATE LOCATION OF EQUIPMENT & PIPING. DO NOT SCALE DRAWINGS. FIELD VERIFY ALL DIMENSIONS PRIOR TO FABRICATING PIPING.
10. THE CONTRACTOR SHALL COORDINATE THE INSTALLATION OF WORK WITH EXISTING CONDITIONS AND THE WORK OF OTHER TRADES. MINOR DEVIATIONS FROM THE PLANS MAY BE MADE TO AVOID MINOR CONFLICTS. WHEN MAJOR CONFLICTS ARE APPARENT, THE OWNER SHALL BE ADVISED IMMEDIATELY AND AFFECTED WORK SHALL NOT BE INSTALLED UNTIL THE CONFLICT HAS BEEN RESOLVED.
11. ALL NECESSARY ALLOWANCES AND PROVISIONS SHALL BE MADE BY THIS CONTRACTOR FOR BEAMS, COLUMNS TO OTHER OBSTRUCTIONS OF THE BUILDING OR THE WORK OF OTHER CONTRACTORS WHETHER OR NOT SAME IS INDICATED. WHERE NECESSARY TO AVOID OBSTRUCTIONS.
12. THE CONTRACTOR SHALL THOROUGHLY CLEAN HIS WORK AREA DAILY. CONTRACTOR SHALL ALSO REMOVE ALL HIS TRASH AND DEBRIS AFTER COMPLETION OF THE WORK.
13. THE INTERIOR SURFACES OF PIPING SHALL BE SMOOTH AND ENTIRELY FREE FROM OBSTRUCTIONS TO FLOW. CLEAN AND FLUSH THE SYSTEMS BEFORE CONNECTING TO EQUIPMENT AND EXISTING SYSTEMS. VERIFY THAT ALL FOREIGN MATERIAL HAS BEEN REMOVED BEFORE PLACING IN SERVICE.
14. PRIOR TO PIPING WORK, CAREFULLY INSPECT THE INSTALLED WORK AND VERIFY THAT ALL SUCH WORK IS COMPLETE TO THE POINT WHERE THE PIPING MAY BE INSTALLED IN ACCORDANCE WITH THESE DOCUMENTS. FOLLOW THE DRAWINGS IN LAYING OUT WORK UNDIMENSIONED DRAWINGS ARE INTENDED TO INDICATE THE GENERAL ARRANGEMENT OF PIPING SYSTEMS AND ARE NOT INTENDED TO CONVEY PRECISE LOCATIONAL INFORMATION. COORDINATE WITH OTHER TRADES TO PERMIT ALL PHASES OF THE WORK TO BE INSTALLED. OFFSETS, FITTINGS, AND EXTRA PIPE, NECESSARY TO AVOID INTERFERENCE OR PROVIDE MAXIMUM HEADROOM AND SPACE, SHALL BE FURNISHED AND INSTALLED WITHOUT ADDITIONAL EXPENSE TO THE OWNER. IF THE PIPING IS INSTALLED WITHOUT COORDINATING WITH OTHER PHASES OF THE WORK SO AS TO CAUSE INTERFERENCE, THE NECESSARY CHANGES SHALL BE MADE AT NO EXTRA CHARGE.
15. EXCESSIVE CUTTING AND SIMILAR OPERATIONS LIKELY TO WEAKEN A BUILDING STRUCTURE TO FACILITATE THE PIPING INSTALLATION WILL NOT BE PERMITTED. IMPLEMENT SUITABLE MEASURES THROUGHOUT THE CONSTRUCTION PERIOD TO PREVENT TRASH AND DIRT FROM ENTERING PIPES, BEFORE, DURING, AND AFTER INSTALLATION. UNLESS OTHERWISE INDICATED, RUN PIPING PARALLEL TO THE WALLS OF THE BUILDING. ERECT VERTICAL PIPING STRAIGHT AND PLUMB. WHERE PIPE IS TO BE INSULATED, PROVIDE A CLEARANCE EQUAL TO THE INSULATION PLUS A MINIMUM OF 1 INCH ALL AROUND.
16. INDEPENDENTLY SUPPORT PIPING AT THE PUMPS AND CONTROL VALVE SO WEIGHT OF PIPING IS NOT SUPPORTED BY THE PUMPS OR CONTROL VALVE.
17. ALL REMOVED VALVES, PUMPS, MOTORS, INSTRUMENTATION, ETC. ARE TO BE TURNED OVER TO THE OWNER OR DISPOSED OF AT THE OPTION OF THE OWNER.
18. COORDINATE SHUTDOWNS WITH OWNER. PROVIDE 7 DAY NOTICE. MINIMIZE SHUTDOWN TIME FOR FEEDWATER SYSTEM TIE-INS BY HAVING NEW PIPING AND VALVES INSTALLED UP TO THE CONNECTION POINT TO THE EXISTING SYSTEMS.

PUMP SCHEDULE

DESIGNATION	P-21	P-22
MANUFACTURER	AURORA	AURORA
MODEL	431 DIAGONAL SPLIT CS 2X4X11LH250 LEFT HAND	431 DIAGONAL SPLIT CS 2X4X11LH250 LEFT HAND
PUMP FUNCTION	FEEDWATER SERVING CISAT GAS BOILERS B-3 AND B-4	FEEDWATER SERVING CISAT GAS BOILERS B-3 AND B-4
OPERATING TEMP °F	240	240
PUMP CAPACITY (MAX/MIN) GPM	180/70	180/70
DEVELOPED HEAD - FT !	650	650
EFFICIENCY - PERCENT	53	53
NPSHR - FT !	8	8
IMPELLER DIAMETER - INCHES	9.3125	9.3125
BREAK HORSEPOWER	56.3	56.3
MOTOR HORSEPOWER	75	75
MOTOR VOLTAGE/PHASE	460/3	460/3
PUMP SPEED - RPM	3550	3550
OUTLET DIAMETER - INCHES	2	2
INLET DIAMETER - INCHES	4	4

CONTROL VALVE SCHEDULE

DESIGNATION	FCV-6
SERVING	BOILER FEEDWATER BYPASS RECIRCULATION
MANUFACTURER	FISHER
MODEL	NPS 1-1/2 EZ 667 SIZE 30 DCV6200 SS
TYPE	EQUAL PERCENT SLIDING STEM GLOBE
MIN/NORMAL/MAX FLOW RATE - GPM	0/35/70
OPERATING TEMP-DEG F	240
MIN CLOSE-OFF PRESSURE - PSIG	308
INLET/OUTLET PRESSURE - PSIG	250/20
VALVE SIZE - INCH	1-1/2
MAX RATED CV	17.3
CONNECTION TYPE	THREADED
FAIL POSITION	OPEN
CONTROL ACTION	MODULATING

NOTE: INSTRUMENT AIR PRESSURE IS 90 PSIG.

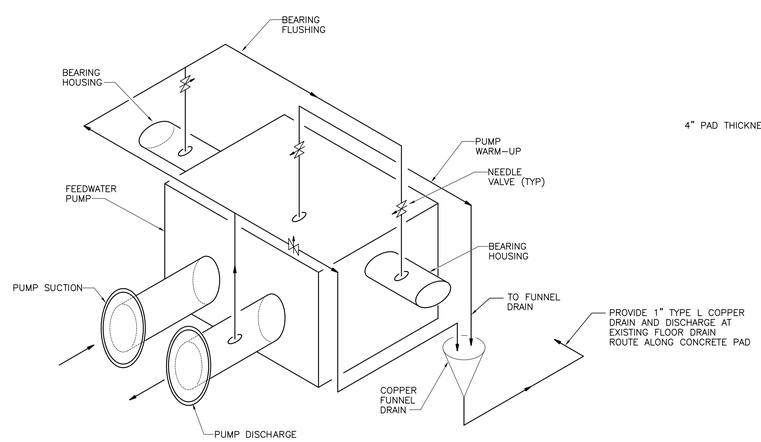

NOTE:
PROVIDE SWAGELOK 1/4" 316SS TUBING WITH FERRULE FITTINGS AND 316SS UNION BONNET NEEDLE VALVES.

FEEDWATER PUMP BEARING FLUSHING & WARM-UP PIPING DETAIL (D / M-601)
NOT TO SCALE

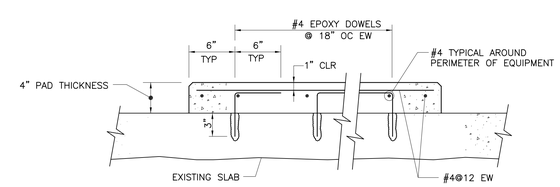

TYPICAL CONCRETE EQUIPMENT PAD DETAIL (E / M-601)
NOT TO SCALE

Wiley|Wilson
Constant Progress
1727 Nelson Drive, Lynchburg, Virginia 24502-6272
phone 434-947-1801 | fax 434-947-1851 | web wileywilson.com

COMMONWEALTH OF VIRGINIA
MICHAEL J. CEHL
Lic. No. 24398
8/14/13
PROFESSIONAL ENGINEER

CITY OF HARRISONBURG RRF
JMU BOILER FEED PUMP
REPLACEMENT
HARRISONBURG, VA

MRK	DATE	REVISION DESCRIPTION

COMM NO: 212272.00
DATE: AUGUST 14, 2013
DRAWN: JPH DESIGN: MJG
CHECK: MJG
CAD FILE: 212272M001.dwg
SHEET TITLE
LEGEND, ABBREVIATIONS, GENERAL NOTES, DETAILS AND SCHEDULES
SHT. NO. M-001 REV. NO. 0