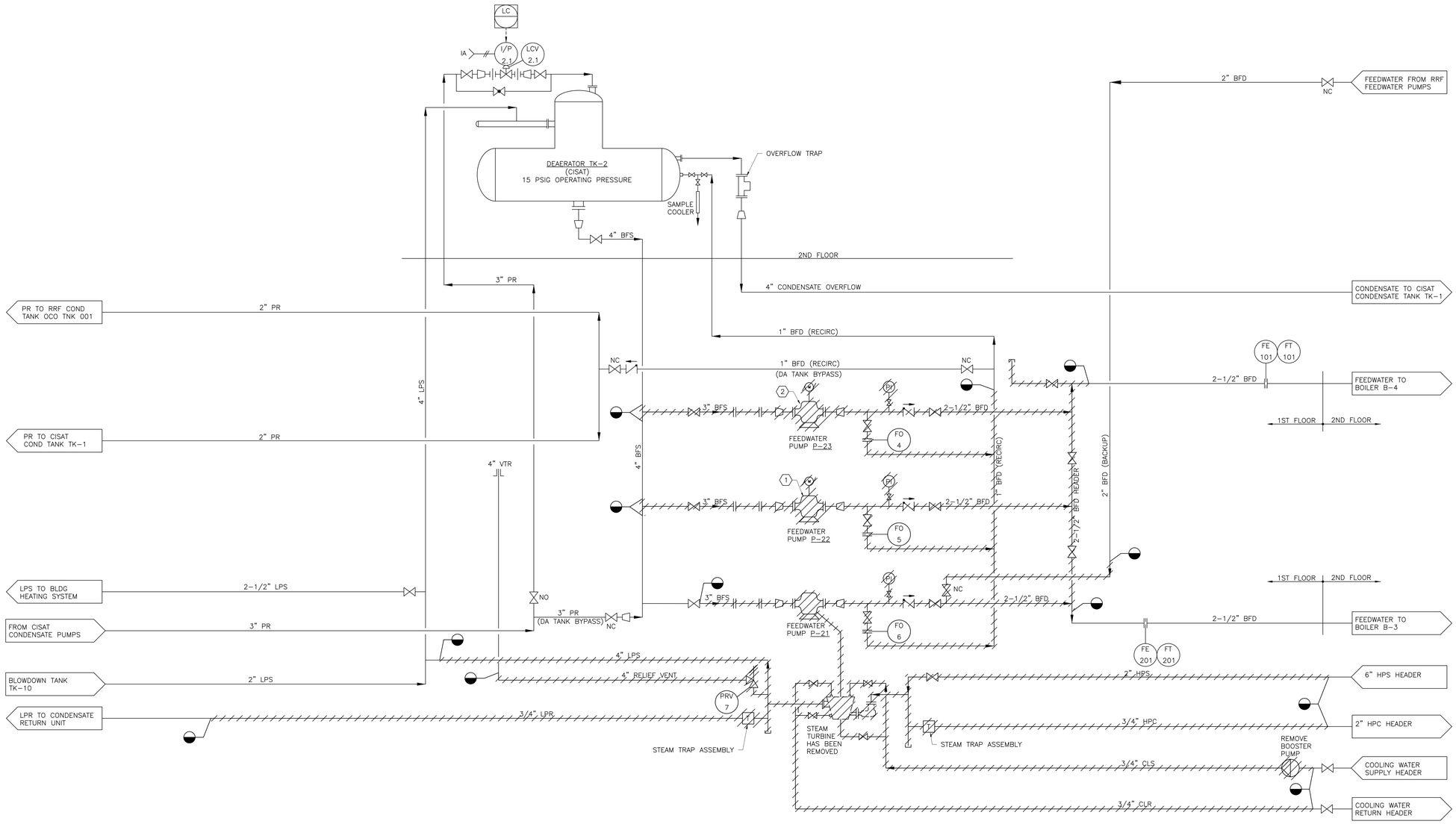

DEMOLITION NOTES:

1. REMOVE FEEDWATER PUMP STATUS FROM A/B PLC-3 SLOT 8/9 AND START/STOP FROM A/B PLC-3 SLOT 9/9. REMOVE PROGRAMING FROM ALLEN-BRADLEY PLC-3. REMOVE CONTROL CONDUIT AND WIRING.
2. REMOVE FEEDWATER PUMP STATUS FROM A/B PLC-3 SLOT 8/10 AND START/STOP FROM A/B PLC-3 SLOT 9/10. REMOVE PROGRAMING FROM ALLEN-BRADLEY PLC-3. REMOVE CONTROL CONDUIT AND WIRING.

JMU CISAT FEEDWATER PROCESS FLOW DIAGRAM - DEMOLITION

NO SCALE

Wiley|Wilson
Constant Progress
127 Nationwide Drive, Lynchburg, Virginia 24502-4272
phone 434.947.1601 | fax 434.947.1601 | web wileywilson.com

COMMONWEALTH OF VIRGINIA
MICHAEL J. GEHL
Lic. No. 24298
8/14/13
PROFESSIONAL ENGINEER

CITY OF HARRISONBURG RRF
JMU BOILER FEED PUMP
REPLACEMENT

HARRISONBURG, VA

REVISION DESCRIPTION

MRK	DATE

COMM NO: 212272.00
DATE: AUGUST 14, 2013
DRAWN: JPH DESIGN: MJG
CHECK: MJG
CAD FILE: 212272MD601.dwg
SHEET TITLE

JMU CISAT FEEDWATER SYSTEM P&ID - DEMOLITION

SHT. NO. MD-601
REV. NO. 0