- To be cleaned
- To be removed
- To be cleaned and removed
- To be cleaned and selectively removed (Specific demolition/removal requirements - see project documents)

GENERAL NOTES:
1. UNIT 1 AND UNIT 2 ARE OPPOSITE HAND UNLESS NOTED OTHERWISE.

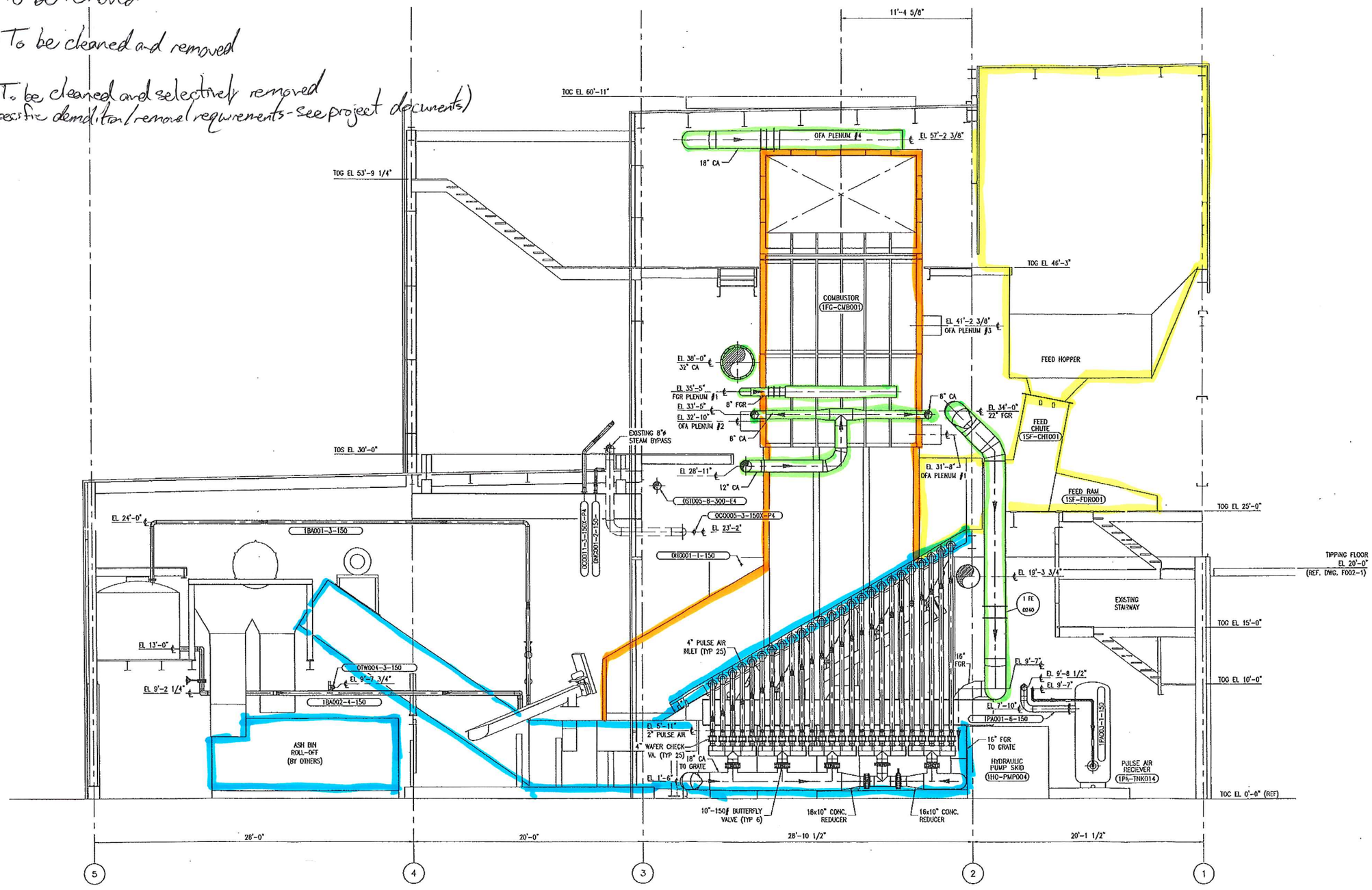

REV	DATE	DESCRIPTION	DWN	CHK	APP
0	03/31/03	ISSUED FOR CONSTRUCTION	MM		

THIS DOCUMENT AND THE INFORMATION IT CONTAINS ARE THE PROPERTY OF BARLOW ENGINEERING, LLC. ARE DISCLOSED IN CONFIDENCE FOR LIMITED USE AND MUST BE SURRENDERED TO BARLOW ENGINEERING, LLC ON DEMAND.

DISCLOSURE, PUBLICATION OR DISTRIBUTION OF THIS DOCUMENT WITHOUT PRIOR WRITTEN AUTHORIZATION FROM BARLOW ENGINEERING, LLC IS STRICTLY PROHIBITED.

COPYRIGHT BARLOW ENGINEERING, LLC AS OF THE DATE DRAWN OR REVISED.

Barlow Engineering Services, LLC.
116 Inverness Drive East
Englewood, CO
Email: mg@barlowpeople.com
Phone: (303) 792-0344
Fax: (303) 799-1338
Web: www.barlowpeople.com

BES PROJECT NO.	6015	
DESIGNED BY:	J. Wagner	03/31/03
DRAWN BY:	D. Hurst	03/31/03
CHECKED BY:	MM	3/31/03
APPROVED BY:	[illegible]	3/31/03
SCALE:	1/4"=1'-0"	
	DO NOT SCALE THIS DRAWING. USE DIMENSIONS ONLY.	

DRAWING TITLE: PIPING ELEVATION – UNIT 1 AREA I & II LOOKING EAST

PROJECT: HARRISONBURG RESOURCE RECOVERY FACILITY

DRAWING NUMBER: P162

SHEET NUMBER: 1 REV: 0

GENERAL NOTES:
1. UNIT 1 AND UNIT 2 ARE OPPOSITE HAND UNLESS NOTED OTHERWISE.

- To be cleaned
- To be removed (Combustor - only refractory and insulation shall be removed)
- To be cleaned and selectively removed (Specific demolition/removal requirements - See project documents)
- To be cleaned and removed

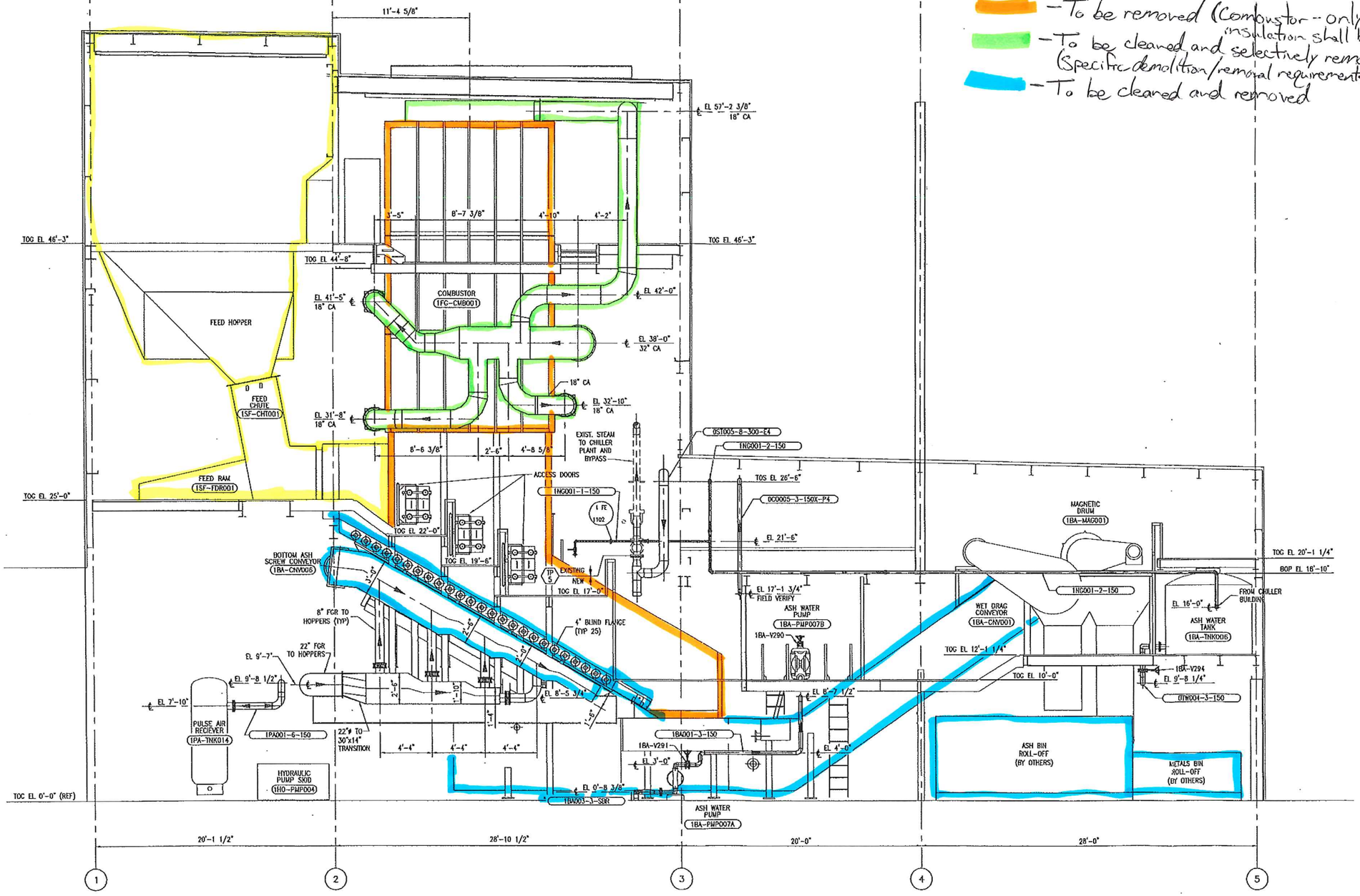

REV	DATE	DESCRIPTION	DWG	CHK	APP
0	03/31/03	ISSUED FOR CONSTRUCTION	DLR		

THIS DOCUMENT AND THE INFORMATION IT CONTAINS ARE THE PROPERTY OF BARLOW ENGINEERING, LLC, ARE DISCLOSED IN CONFIDENCE FOR LIMITED USE AND MUST BE SURRENDERED TO BARLOW ENGINEERING, LLC ON DEMAND.

DISCLOSURE, PUBLICATION OR DISTRIBUTION OF THIS DOCUMENT WITHOUT PRIOR WRITTEN AUTHORIZATION FROM BARLOW ENGINEERING, LLC IS STRICTLY PROHIBITED.

COPYRIGHT BARLOW ENGINEERING, LLC AS OF THE DATE DRAWN OR REVISED.

Barlow Engineering Services, LLC.
116 Inverness Drive East
Englewood, CO
E-mail: mgg@barlowprojects.com
Phone: (303) 792-0245
Fax: (303) 799-1258
Web: www.barlowprojects.com

BPI PROJECT NO:	6015	
DESIGNED BY:	J. Wagner	03/31/03
DRAWN BY:	D. Horst	03/31/03
CHECKED BY:	MPA	3/31/03
APPROVED BY:	JSL	3.MAR.03
SCALE:	1/4"=1'-0"	

DO NOT SCALE THIS DRAWING. USE DIMENSIONS ONLY.

DRAWING TITLE: PIPING ELEVATION - UNIT 1 AREA I & II LOOKING WEST

PROJECT: HARRISONBURG RESOURCE RECOVERY FACILITY

DRAWING NUMBER: P161

SHEET NUMBER: 1 REV: 0

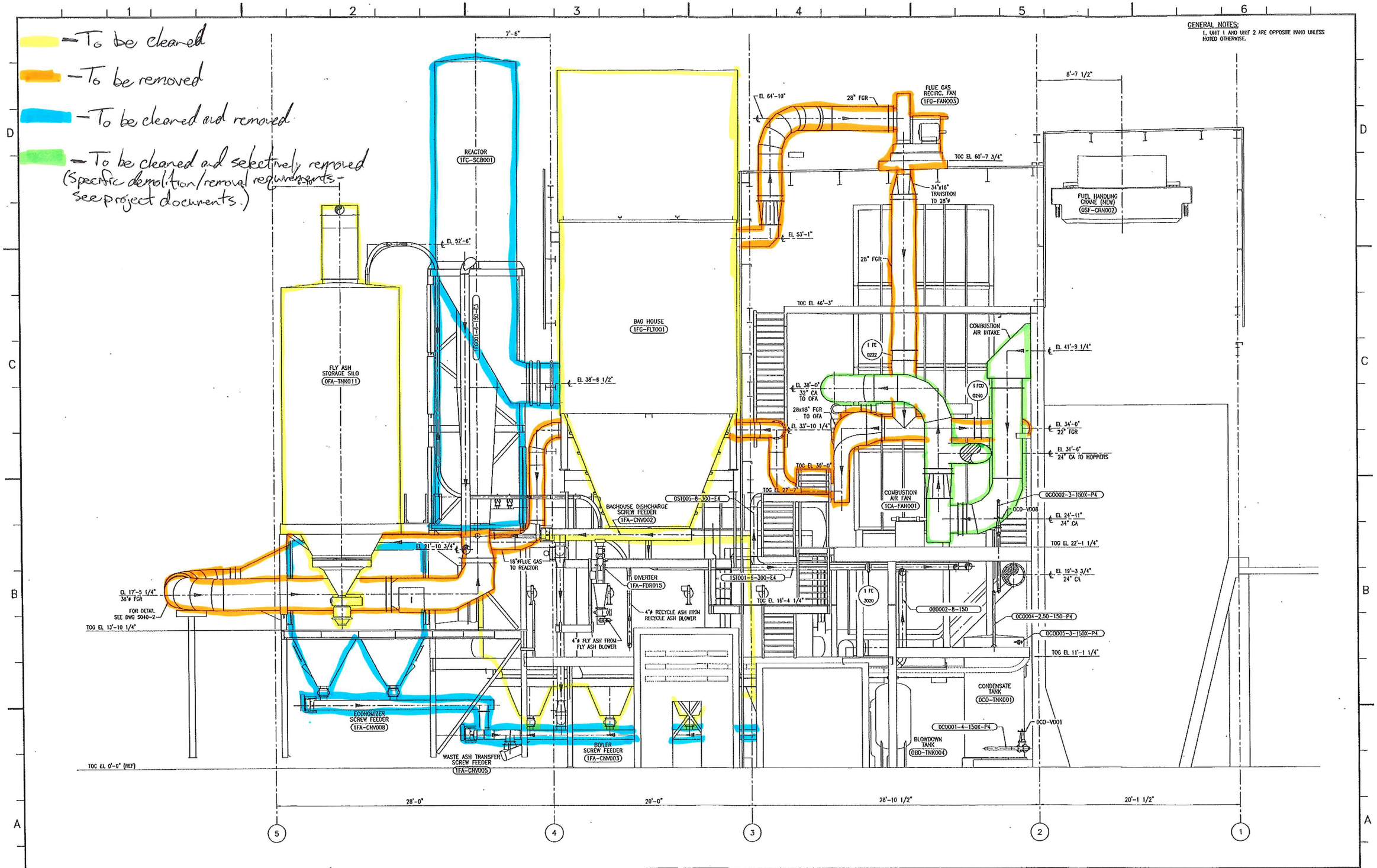

REV	DATE	DESCRIPTION	DWG	CHK	APP
0	03/31/03	ISSUED FOR CONSTRUCTION	DLH		

THIS DOCUMENT AND THE INFORMATION IT CONTAINS ARE THE PROPERTY OF BARLOW ENGINEERING, LLC, ARE DISCLOSED IN CONFIDENCE FOR LIMITED USE AND MUST BE SURRENDERED TO BARLOW ENGINEERING, LLC ON DEMAND.

DISCLOSURE, PUBLICATION OR DISTRIBUTION OF THIS DOCUMENT WITHOUT PRIOR WRITTEN AUTHORIZATION FROM BARLOW ENGINEERING, LLC IS STRICTLY PROHIBITED.

COPYRIGHT BARLOW ENGINEERING, LLC AS OF THE DATE DRAWN OR REVISED.

Barlow Engineering Services, LLC.
116 Inverness Drive East
Englewood, CO
E-mail: mgr@barlowprojects.com
Phone: (303) 792-0244
Fax: (303) 799-1231
Web: www.barlowprojects.com

BPI PROJECT NO.	6015	
DESIGNED BY:	J. Wagner	11/30/02
DRAWN BY:	O. Horst	11/30/02
CHECKED BY:	MPA	3/31/03
APPROVED BY:	JTK	31-MAR-03
SCALE:	1/4" = 1'-0"	

DO NOT SCALE THIS DRAWING. USE DIMENSIONS ONLY.

DRAWING TITLE:
PIPING ELEVATION – UNIT 1 AREA I & II LOOKING EAST

PROJECT: HARRISONBURG RESOURCE RECOVERY FACILITY

DRAWING NUMBER: P164

SHEET NUMBER: 1 REV: 0

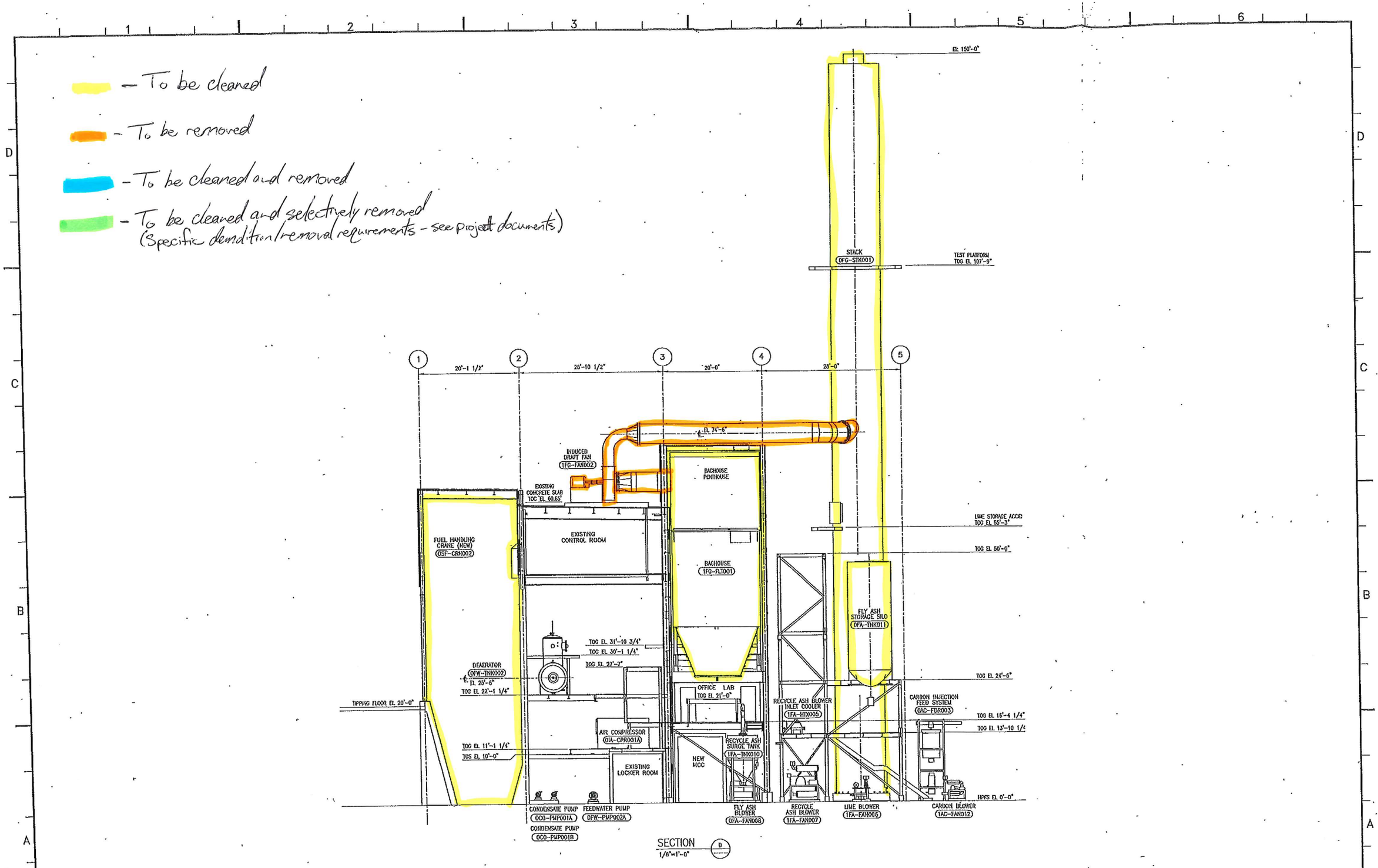

REV	DATE	DESCRIPTION	DWG	CHK	APP
0	01/31/03	ISSUED FOR CONSTRUCTION	JBW	JBW	JBW

THIS DOCUMENT AND THE INFORMATION IT CONTAINS ARE THE PROPERTY OF BARLOW ENGINEERING, LLC, ARE DISCLOSED IN CONFIDENCE FOR LIMITED USE AND MUST BE SURRENDERED TO BARLOW ENGINEERING, LLC ON DEMAND.

DISCLOSURE, PUBLICATION OR DISTRIBUTION OF THIS DOCUMENT WITHOUT PRIOR WRITTEN AUTHORIZATION FROM BARLOW ENGINEERING, LLC IS STRICTLY PROHIBITED.

COPYRIGHT BARLOW ENGINEERING, LLC AS OF THE DATE DRAWN OR REVISED.

Barlow Engineering Services, LLC.
116 Inverness Drive East
Englewood, CO
E-mail: mgr@barlowprojects.com
Phone: (303) 792-0248
Fax: (303) 792-1258
Web: www.barlowprojects.com

BPL PROJECT NO:	6015	
DESIGNED BY:	J. Wagner	08/13/02
DRAWN BY:	JBW	08/13/02
CHECKED BY:	JBW	1-31-03
APPROVED BY:	JLC	31-JAN-03
SCALE:	1/8" = 1'-0"	

DO NOT SCALE THIS DRAWING. USE DIMENSIONS ONLY.

DRAWING TITLE:
GENERAL ARRANGEMENT
SECTION D
ELEVATION LOOKING WEST

PROJECT: HARRISONBURG RESOURCE RECOVERY FACILITY

DRAWING NUMBER: GA204

SHEET NUMBER: 1 REV: 0

PROPRIETARY & CONFIDENTIAL

- To be cleaned
- To be removed
- To be cleaned and removed

GENERAL NOTES:
1. UNIT 1 AND UNIT 2 ARE OPPOSITE HAND UNLESS NOTED OTHERWISE.

48" FLUE GAS
℄ EL 74'-6"
STACK (0FG-STK001)
1FG001-6-150-E3
2FG002-6-150-E3
REACTOR (1FG-SCB001)
REACTOR (2FG-SCB001)
TOG EL 55'-0"
℄ EL 52'-0"
1'-6 3/8"
1ST021-8-150S-
1ST024-8-150S-
2ST024-8-150S-
2ST021-8-150S-
FLY ASH STORAGE SILO (0FA-TNK011)
℄ EL 33'-9"
℄ EL 29'-10"
1 PSV 3002
2 PSV 3002
18" FGR
WASTE HEAT BOILER (1FG-BLR001)
WASTE HEAT BOILER (2FG-BLR001)
℄ EL 22'-7 5/8"
℄ EL 17'-5 1/4"
SEE DWG S040-2 FOR DETAIL
℄ EL 18'-5"
11 3/4"
38" FGR
TOG EL 13'-10 1/4"
11'-0"
UNLOADING SPOUT (0FA-FDR016)
2AC001-1.25-50-
℄ EL 23'-4"
CARBON INJECTION FEED SYSTEM (0AC-FDR003)
ECONOMIZER (1FG-EC0001)
ECONOMIZER (2FG-EC0001)
ASH WATER TANK (1BA-TNK006B)
ASH WATER TANK (1BA-TNK006A)
ASH WATER TANK (2BA-TNK006A)
ASH WATER TANK (2BA-TNK006B)
1BA002-4-150-
2BA002-4-150-
℄ EL 9'-8 1/4"
ASH BIN ROLL-OFF (BY OTHERS)
METALS BIN ROLL-OFF (BY OTHERS)
RECYCLE ASH BLOWER (1FA-FAN007)
CARBON BLOWER (1AC-FAN012)
CARBON BLOWER (2AC-FAN012)
LIME BLOWER (1LH-FAN006)
LIME BLOWER (2LH-FAN006)
EXISTING CHILLER BUILDING
HPFS EL 0'-0" (REF)
26'-6"
19'-0"
28'-6"
16'-0"

REV	DATE	DESCRIPTION	DES	DWG	CHK	APP'D
0	03/31/03	ISSUED FOR CONSTRUCTION				

THIS DOCUMENT AND THE INFORMATION IT CONTAINS ARE THE PROPERTY OF BARLOW ENGINEERING, LLC. ARE DISCLOSED IN CONFIDENCE FOR LIMITED USE AND MUST BE SURRENDERED TO BARLOW ENGINEERING, LLC ON DEMAND.

DISCLOSURE, PUBLICATION OR DISTRIBUTION OF THIS DOCUMENT WITHOUT PRIOR WRITTEN AUTHORIZATION FROM BARLOW ENGINEERING, LLC IS STRICTLY PROHIBITED.

COPYRIGHT BARLOW ENGINEERING, LLC AS OF THE DATE DRAWN OR REVISED.

Barlow Engineering Services, LLC.
116 Inverness Drive East
Englewood, CO
E-mail: eng@barlowprojects.com
Phone: (303) 799-0344
Fax: (303) 799-1218
Web: www.barlowprojects.com

BES PROJECT NO:	6015	
DESIGNED BY:	J. Wagner	03/31/03
DRAWN BY:	D. Hurst	03/31/03
CHECKED BY:	MPA	3/31/03
APPROVED BY:	PJL	3/31/03
SCALE:	1/4" = 1'-0"	

DO NOT SCALE THIS DRAWING. USE DIMENSIONS ONLY.

DRAWING TITLE: PIPING ELEVATION AREA IX, V & VI LOOKING SOUTH

DRAWING NUMBER: P166

PROJECT: HARRISONBURG RESOURCE RECOVERY FACILITY

SHEET NUMBER: 1 | REV: 0

- To be cleaned
- To be removed
- To be cleaned and removed
- Specific cleaning/demolition/removal requirements (see project documents)

Figure 3
City of Harrisonburg
Resource Recovery Facility
Process Flow Diagram

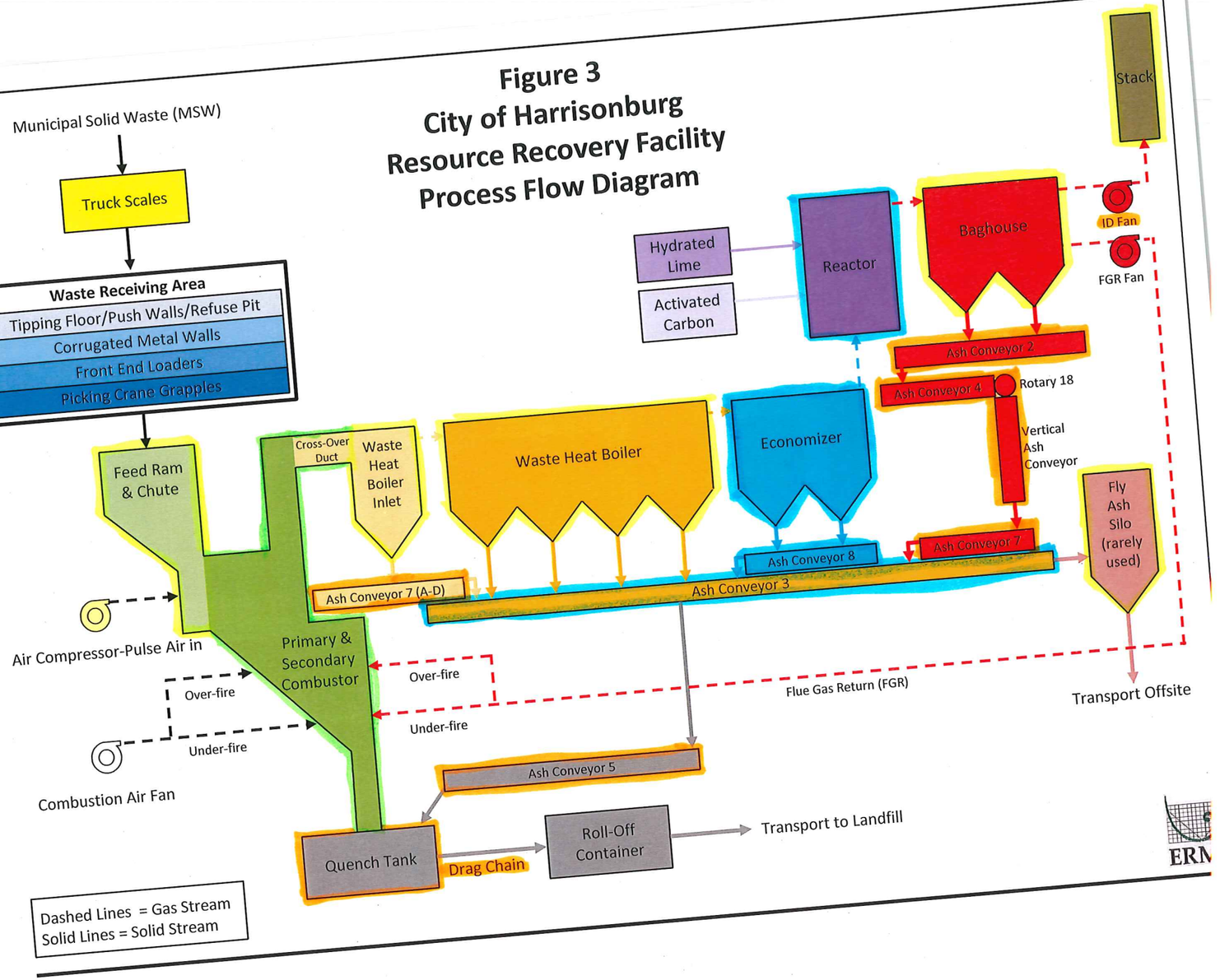

– Specific cleanup / demolition / removal requirements (See project documents)

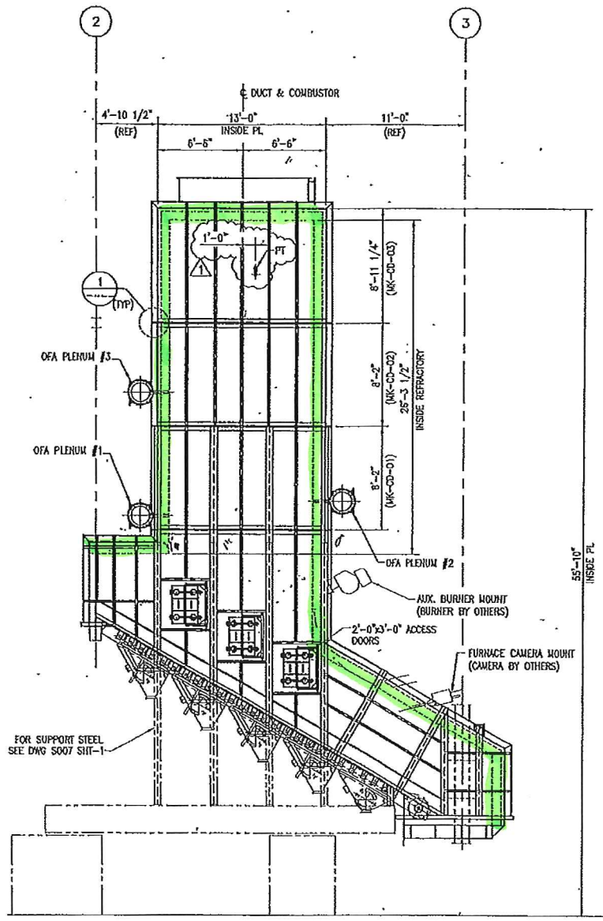

FAST ELEVATION – COMBUSTOR
3/16"=1'-0" (UNIT #1 SHOWN)

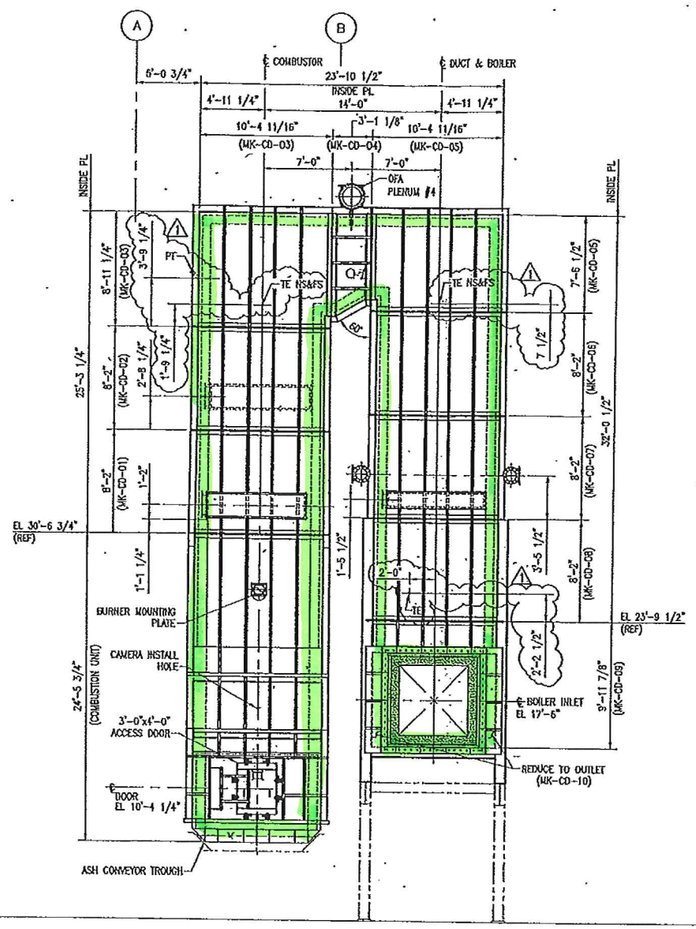

NORTH ELEVATION
3/16"=1'-0" (UNIT #1 SHOWN)

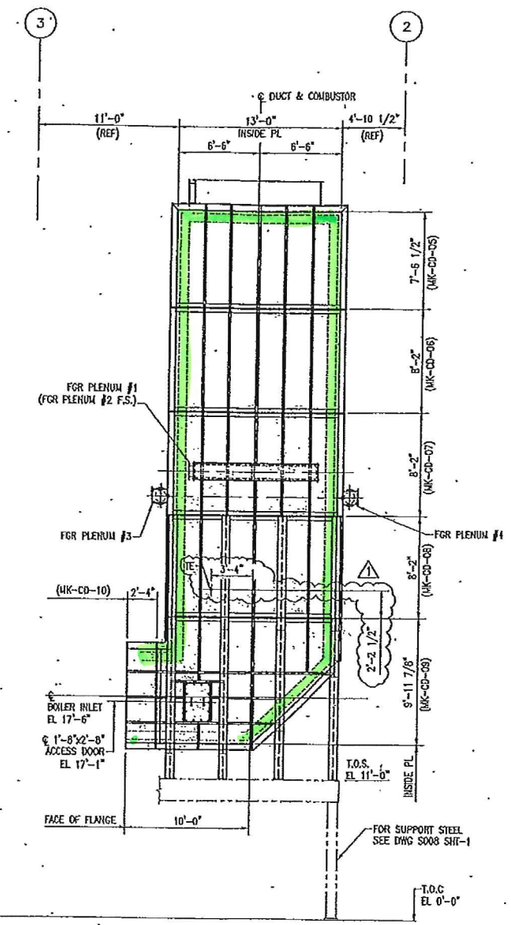

WEST ELEVATION – BOILER DUCT
3/16"=1'-0" (UNIT #1 SHOWN)

NOTES:

1. FOR ADDITIONAL TECHNICAL REQUIREMENTS SEE COMBUSTOR SPECIFICATION.
2. ALL COMBUSTOR SHELL PLATES TO BE 3/16" A36 UNLESS OTHERWISE NOTED.
3. ALL SHELL PLATE JOINTS SHALL BE MADE WITH FULL PENETRATION WELDS.

REFERENCE DRAWINGS:

BARLOW ENGINEERING SERVICES

F020–SHT 1 COMBUSTOR FOUNDATION MODIFICATIONS

S008–SHT 2 BOILER SUPPORT FRAME

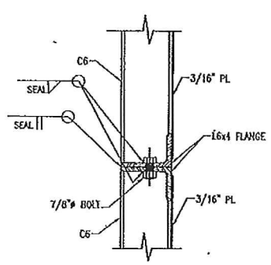

DETAIL 1
1 1/2" = 1'-0"

PROPRIETARY & CONFIDENTIAL

1	11/15/12	ADDED PRESSURE AND THERMAL TAPS	DWS	DWS	RTL
0	9/14/12	ISSUED FOR FABRICATION	DWS	DWS	RTL

THIS DOCUMENT AND THE INFORMATION IT CONTAINS ARE THE PROPERTY OF BARLOW ENGINEERING, LLC, ARE DISCLOSED IN CONFIDENCE FOR LIMITED USE AND MUST BE SURRENDERED TO BARLOW ENGINEERING, LLC ON DEMAND.

DISCLOSURE, PUBLICATION OR DISTRIBUTION OF THIS DOCUMENT WITHOUT PRIOR WRITTEN AUTHORIZATION FROM BARLOW ENGINEERING, LLC IS STRICTLY PROHIBITED.

COPYRIGHT BARLOW ENGINEERING, LLC AS OF THE DATE DRAWN OR REVISED.

Barlow Engineering Services, LLC
114 Inverness Drive East
Englewood, CO
Phone: (303) 792-0141
Fax: (303) 799-1316

BY PROJECT NO:	8015	
DESIGNED BY:	DWS	8/13/12
DRAWN BY:	DWS	8/13/12
CHECKED BY:	RTL	10/9/12
APPROVED BY:	RTL	10/9/12
SCALE:	AS NOTED	

DRAWING TITLE: COMBUSTION UNIT GENERAL ARRANGEMENT

DRAWING NUMBER: S020

PROJECT: HARRISONBURG RESOURCE RECOVERY FACILITY

SHEET NUMBER: 1 OF 1

THIS EQUIPMENT AND PROCESS IS PROTECTED UNDER U.S. PATENT NUMBERS 4,955,296 AND 5,044,288. OTHER U.S. AND INTERNATIONAL PATENTS PENDING.

- Specific cleaning / demolition / removal requirements (see project documents)

NOTES:

1. WORK THIS DRAWING WITH DRAWINGS S020 SHT-1 AND S020 SHTS-14 THROUGH 16.

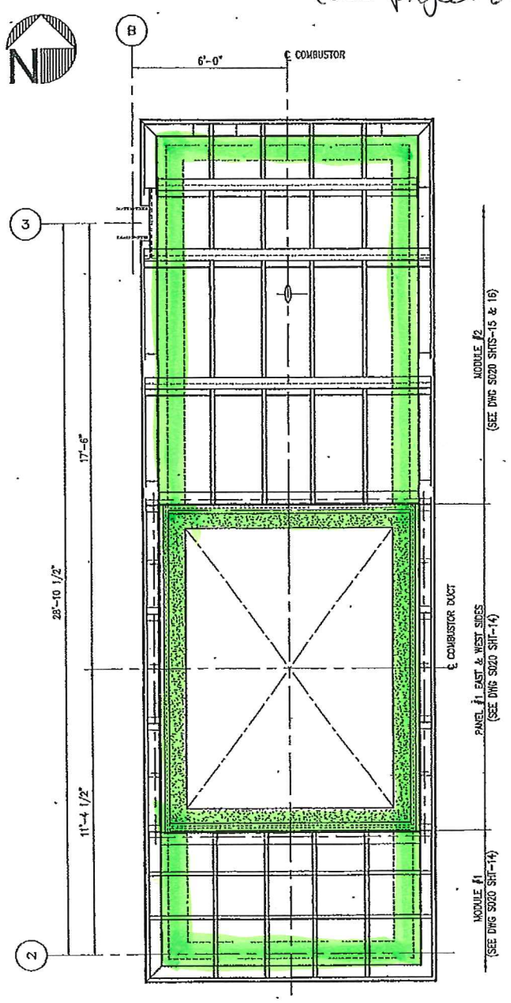

PLAN – COMBUSTION UNIT
3/8"=1'-0"
(UNIT 1 SHOWN)
(UNIT 2 OPP HAND)

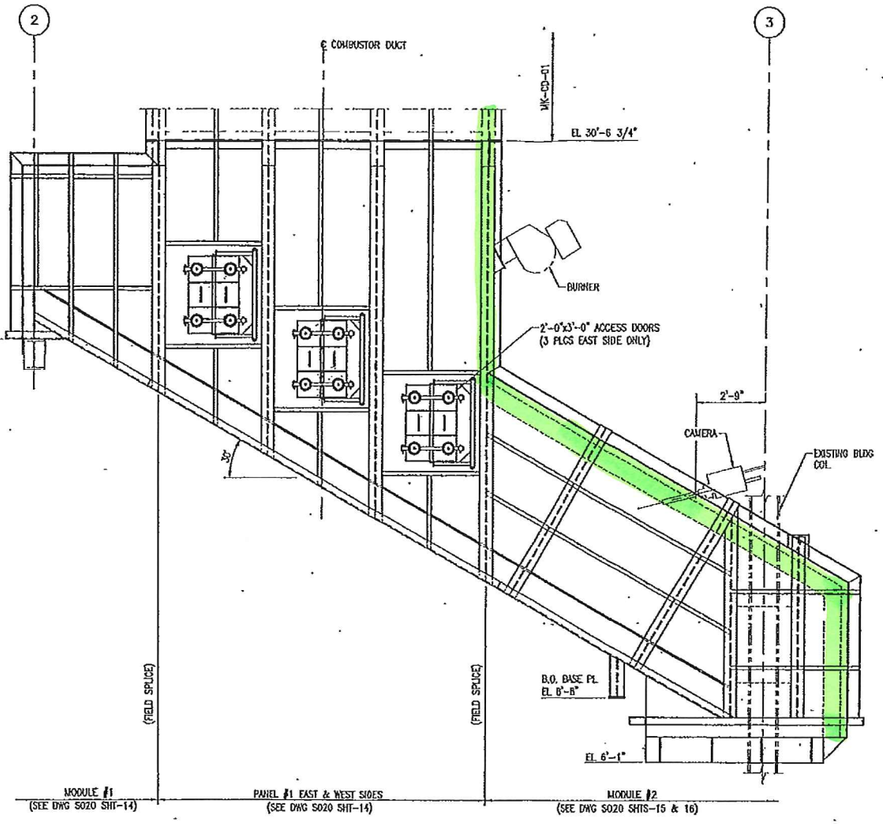

EAST ELEVATION
3/8"=1'-0"

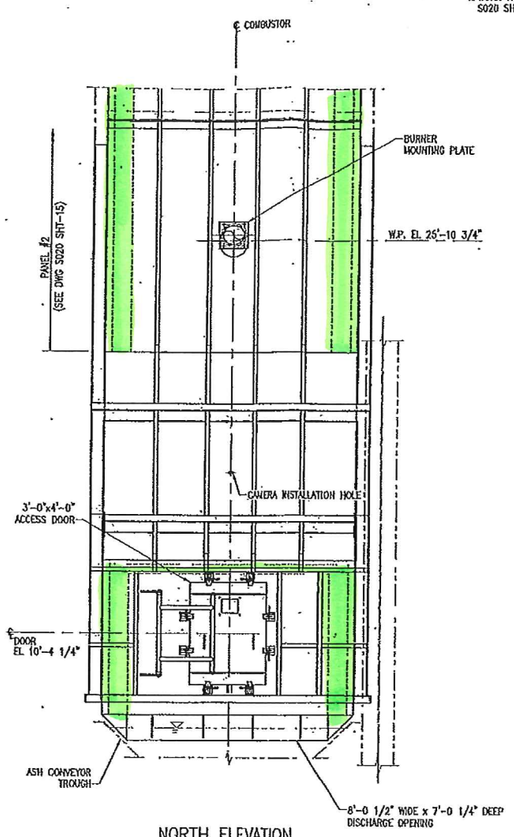

NORTH ELEVATION
3/8"=1'-0"

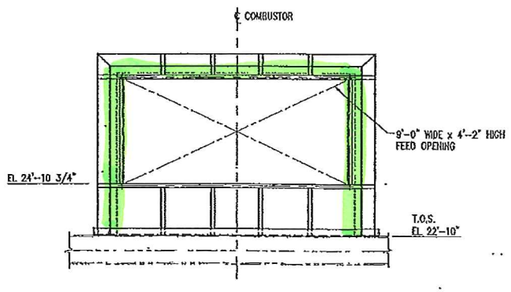

SOUTH ELEVATION
3/8"=1'-0"

THIS EQUIPMENT AND PROCESS IS PROTECTED UNDER U.S. PATENT NUMBERS 4,955,296 AND 5,044,288. OTHER U.S. AND INTERNATIONAL PATENTS PENDING.

PROPRIETARY & CONFIDENTIAL

REV	DATE	DESCRIPTION	DWG	CHK	APP
0	1/15/03	ISSUED FOR FABRICATION			

THIS DOCUMENT AND THE INFORMATION IT CONTAINS ARE THE PROPERTY OF BARLOW ENGINEERING, LLC, ARE DISCLOSED IN CONFIDENCE FOR LIMITED USE AND MUST BE SURRENDERED TO BARLOW ENGINEERING, LLC ON DEMAND.

DISCLOSURE, PUBLICATION OR DISTRIBUTION OF THIS DOCUMENT WITHOUT PRIOR WRITTEN AUTHORIZATION FROM BARLOW ENGINEERING, LLC IS STRICTLY PROHIBITED.

COPYRIGHT BARLOW ENGINEERING, LLC AS OF THE DATE DRAWN OR REVISED.

Barlow Engineering Services, LLC.
116 Inverness Drive East
Englewood, CO
Email: mg@barlowpejets.com
Phone: (303) 792-0241
Fax: (303) 799-1234
Web: www.barlowpejets.com

BY PROJECT NO:	6015	
DESIGNED BY:	DWS	1/7/03
DRAWN BY:	DWS	1/7/03
CHECKED BY:	CFH	1/8/03
APPROVED BY:	FEL	1/8/03
SCALE:	AS NOTED	

DO NOT SCALE THIS DRAWING. USE DIMENSIONS ONLY.

DRAWING TITLE: COMBUSTOR COMBUSTION UNIT 2 PLAN & ELEVATIONS

DRAWING NUMBER: S020

PROJECT: HARRISONBURG RESOURCE RECOVERY FACILITY

SHEET NUMBER: 13 REV: 0

- To be cleaned and removed

- Specific cleaning/demolition/removal requirements (See project documents)

DO NOT SCALE USE DIMENSIONS ONLY | "NF" INDICATES NOT FURNISHED BY N.D.

DO NOT USE FOR CONSTRUCTION UNLESS APPROVED BELOW

THIS DRAWING IS THE PROPERTY OF NATIONAL DYNAMICS COMPANY AND IS LOANED ON CONDITION THAT IT SHALL NOT BE COPIED OR REPRODUCED IN WHOLE OR IN PART OR DISCLOSED TO ANY THIRD PARTY OR USED IN ANY WAY WITHOUT THE WRITTEN CONSENT OF NATIONAL DYNAMICS COMPANY. ANY EQUIPMENT OR MATERIAL SHOWN, BUT NOT FURNISHED BY NATIONAL DYNAMICS COMPANY, IS FOR ILLUSTRATING THE APPLICATION, AND NATIONAL DYNAMICS COMPANY ACCEPTS NO RESPONSIBILITY AS TO THE INSTALLATION OR OPERATION OF SUCH EQUIPMENT OR MATERIALS.

REV.	DATE	DESCRIPTION	CH #	DWN	CKD	CKD DATE	APP	APP DATE
1	12/13/02	INITIAL SUBMITTAL TO CUSTOMER		RFH	JAF	12/13/02	MHM	12/13/02
2	12/18/02	REVISED PER MARKUPS		RFH	JAF	12/20/02	MHM	12/20/02
3	2/6/03	REVISED PER MARKUPS	J03-004	RSB	JAF	2/7/03	MHM	2/7/03/
4	2/19/03	ADD SEAL WELD FOR HOPPERS TO BOILER; CLEAN UP	E03-119	RSB	JAF	2/27/03	MHM	2/27/03
		PIPES WERE ON FRONT (AS VIEWED FROM SIDE); TOP						
		OF GRATING WAS 13'-0"; ADD (1) T16a; REMOVE (3)						
		T26a; ADD T5a; ADD D8a; SB WAS 5'-1 1/2" TO BE						

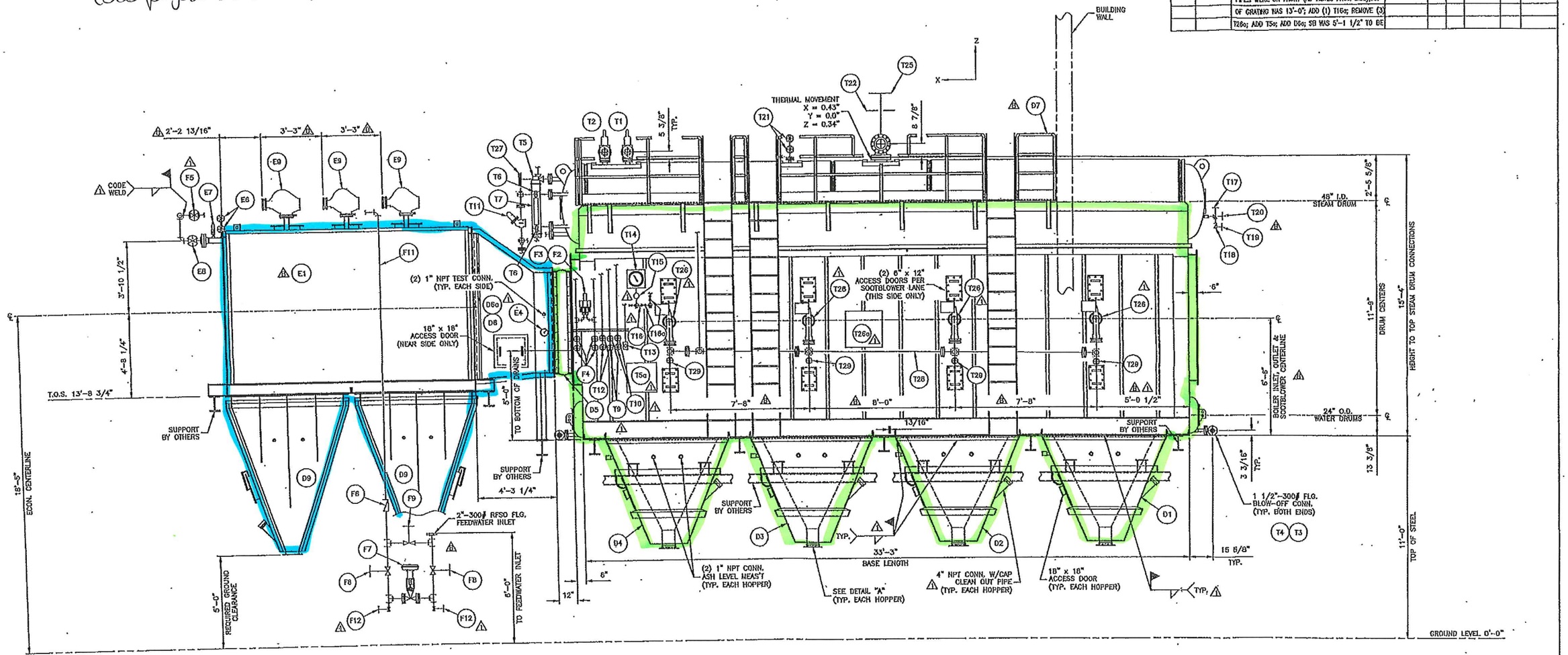

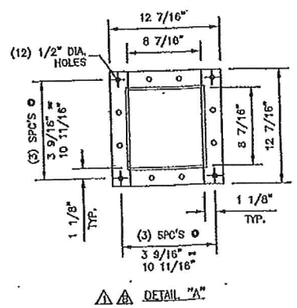

DETAIL "A"

CERTIFIED FOR CONSTRUCTION BY: [illegible] DATE: 2-27-03

SIDE VIEW

NO ATTACHMENTS TO ENERGY RECOVERY INTERNATIONAL SUPPLIED EQUIPMENT WITHOUT PRIOR WRITTEN AUTHORIZATION.

NOTES:

1. REFER TO B/M-3596 FOR A COMPLETE DESCRIPTION OF COMPONENTS & DESIGN DATA.
2. REFER TO B/M-3596 FOR A COMPLETE DESCRIPTION OF PAINT NOTES.
3. FEEDWATER PIPING TO BE SUPPORTED IN FIELD BY OTHERS.
4. BOILER, DUCTWORK & ECONOMIZER SUPPORT BY OTHERS.

RECEIVED DOCUMENT CONTROL DEPT. 10 2003

Energy Recovery International — BARLOW ENGINEERING SERVICES, LLC

NATIONAL DYNAMICS — An AKM-CHEM Company

GENERAL ARRANGEMENT
SERIES: VLA-4-98

UNIT #1
CITY OF HARRISONBURG, VIRGINIA
HARRISONBURG, VIRGINIA

HARRISONBURG RESOURCE RECOVERY FACILITY
BPI PO #: 60160001
BPI TAG #: 1FG-BLR001
BPI FILE #: 1120
BPI CONTRACT #: 6015

SCALE: 3/8" = 1'-0" | JOB NO.: VJK-3596 | HAND: AS SHOWN | SERIAL NO.: W-4615 | DRAWING NO. 722-3450 | SHEET 1 OF 3 | 1 REV

— To be cleaned and removed

— Specific cleaning/demolition/removal requirements (see project documents)

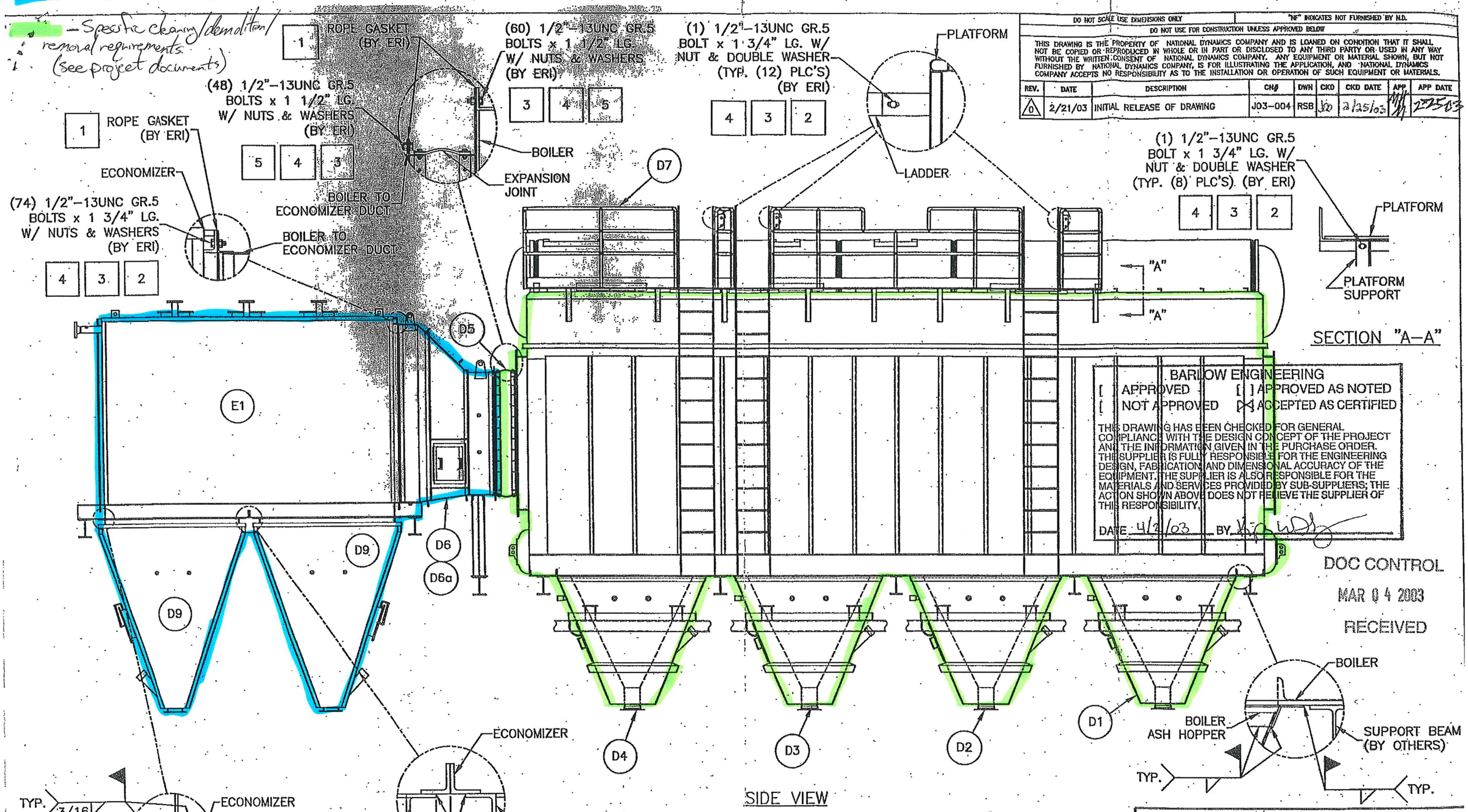

DO NOT SCALE USE DIMENSIONS ONLY	"NF" INDICATES NOT FURNISHED BY N.D.
DO NOT USE FOR CONSTRUCTION UNLESS APPROVED BELOW	

THIS DRAWING IS THE PROPERTY OF NATIONAL DYNAMICS COMPANY AND IS LOANED ON CONDITION THAT IT SHALL NOT BE COPIED OR REPRODUCED IN WHOLE OR IN PART OR DISCLOSED TO ANY THIRD PARTY OR USED IN ANY WAY WITHOUT THE WRITTEN CONSENT OF NATIONAL DYNAMICS COMPANY. ANY EQUIPMENT OR MATERIAL SHOWN, BUT NOT FURNISHED BY NATIONAL DYNAMICS COMPANY, IS FOR ILLUSTRATING THE APPLICATION, AND NATIONAL DYNAMICS COMPANY ACCEPTS NO RESPONSIBILITY AS TO THE INSTALLATION OR OPERATION OF SUCH EQUIPMENT OR MATERIALS.

REV.	DATE	DESCRIPTION	CN#	DWN	CKD	CKD DATE	APP	APP DATE
0	2/21/03	INITIAL RELEASE OF DRAWING	J03-004	RSB	JD	2/25/03	[illegible]	2-25-03

BARLOW ENGINEERING

[ ] APPROVED [ ] APPROVED AS NOTED

[ ] NOT APPROVED [X] ACCEPTED AS CERTIFIED

THIS DRAWING HAS BEEN CHECKED FOR GENERAL COMPLIANCE WITH THE DESIGN CONCEPT OF THE PROJECT AND THE INFORMATION GIVEN IN THE PURCHASE ORDER. THE SUPPLIER IS FULLY RESPONSIBLE FOR THE ENGINEERING DESIGN, FABRICATION AND DIMENSIONAL ACCURACY OF THE EQUIPMENT. THE SUPPLIER IS ALSO RESPONSIBLE FOR THE MATERIALS AND SERVICES PROVIDED BY SUB-SUPPLIERS; THE ACTION SHOWN ABOVE DOES NOT RELIEVE THE SUPPLIER OF THIS RESPONSIBILITY.

DATE 4/2/03 BY [illegible]

DOC CONTROL

MAR 04 2003

RECEIVED

NOTES:

1. ◯ = ITEMS LISTED ON TJM-3596 TRIM LIST

□ = ITEMS LISTED ON BILL OF MATERIAL

National Dynamics An AQUA-CHEM Company

ASSY, ARRANGEMENT SERIES: VLA-4-98

UNIT #1

CITY OF HARRISONBURG, VIRGINIA

HARRISONBURG, VIRGINIA

SCALE: 1/4" = 1'-0"

JOB NO.: TJM-3596 SERIAL NO.: W-4615

– Specific cleaning/demolition/removal requirements (see project documents)

RECEIVED
DOCUMENT CONTROL DEPT.
MAR 14 2003
BARLOW ENGINEERING SERVICES, LLC

BARLOW ENGINEERING
[ ] APPROVED AS NOTED
[ ] APPROVED [X] ACCEPTED AS CERTIFIED
[ ] NOT APPROVED
THIS DRAWING HAS BEEN CHECKED FOR GENERAL COMPLIANCE WITH THE DESIGN CONCEPT OF THE PROJECT AND THE INFORMATION GIVEN IN THE PURCHASE ORDER. THE SUPPLIER IS FULLY RESPONSIBLE FOR THE ENGINEERING DESIGN, FABRICATION, AND DIMENSIONAL ACCURACY OF THE EQUIPMENT. THE SUPPLIER IS ALSO RESPONSIBLE FOR THE MATERIALS AND SERVICES PROVIDED BY SUB-SUPPLIERS; THE ACTION SHOWN ABOVE DOES NOT RELIEVE THE SUPPLIER OF THIS RESPONSIBILITY.
DATE 4/3/03 BY

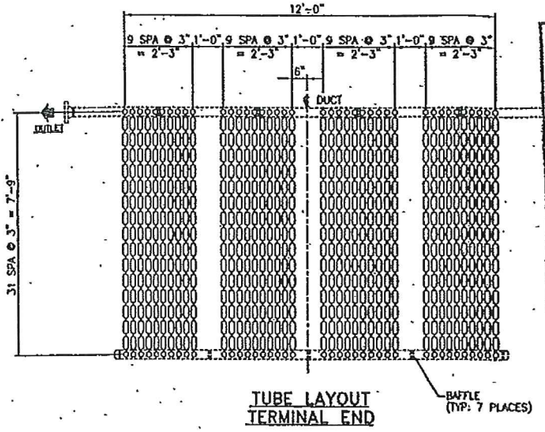

TUBE LAYOUT
TERMINAL END

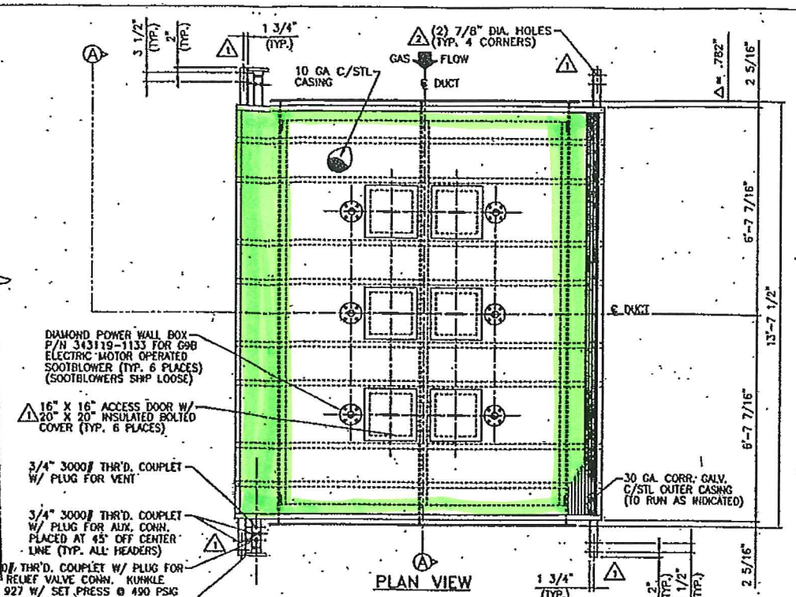

PLAN VIEW

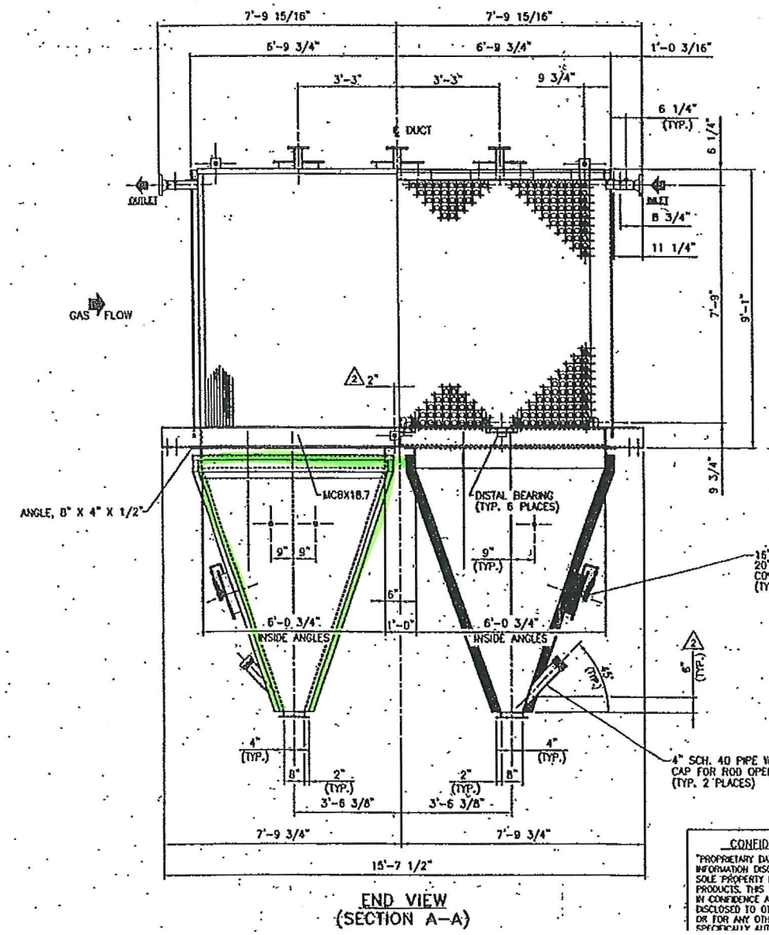

END VIEW
(SECTION A–A)

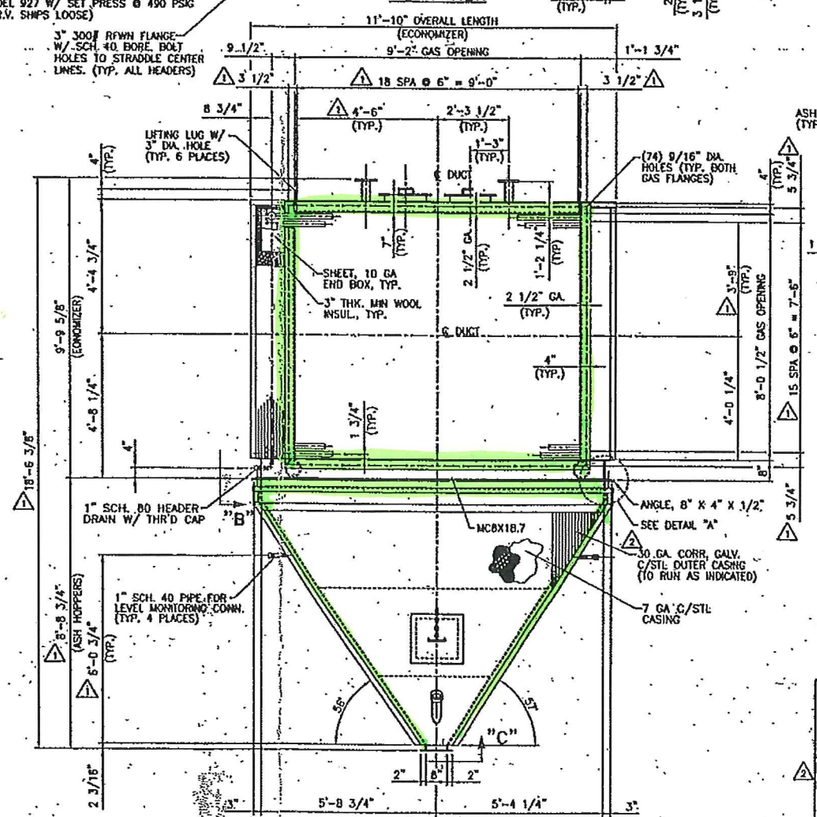

ELEVATION VIEW
Δ2 (VIEW OF GAS OUTLET)

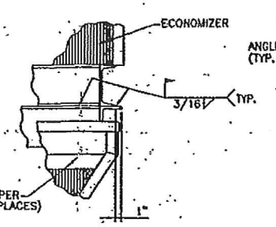

DETAIL "A"

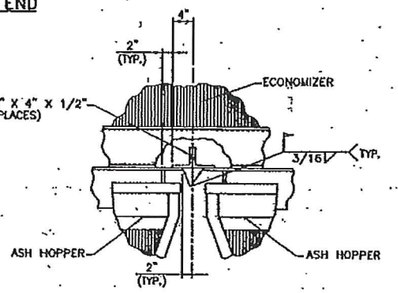

VIEW "B"

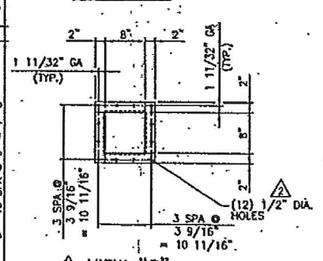

Δ1 VIEW "C"

- HORIZONTAL GAS FLOW
- CUSTOMER P.O. NO.: NB-104521
- LOCATION: HARRISONBURG, VA
- UNIT SERIAL NO.: 20027169
- ALL INNER CASING JOINTS TO BE SEAL WELDED
- RADIOGRAPH: NOT REQ'D.
- POST WELD HEAT TREATMENT: NOT REQ'D
- TOTAL EFFECTIVE HT SURFACE: 6,144 SQ. FT.
- HEAT EXCHANGED: 4,578,680 BTU/HR
- EST. UNIT WEIGHT: 48,026# DRY, 65,490# WET
- NO. UNITS REQ'D: (1) REQ'D.
- PAINT: ONE COAT ALUMINUM PAINT ON ALL EXTERIOR SURFACES EXCEPT GALV. OUTER CASING (1 MIL D.F.T.)

HARRISONBURG RESOURCE RECOVERY FACILITY
BPI PO NO.: 60150001
BPI TAG NO.: HRG-BLR001
BPI FILE NO.: M120
BPI CONTRACT NO.: 6015

ASH HOPPER WEIGHT:
- EMPTY: 5330 LB
- FILLED W/ ASH: 15,304 LB
- FILLED W/ WATER: ~19,153 LB

ALLOWABLE LOADS
OUTLET GAS FLANGE: 40 KIPS

DESIGN DATA:
- CODE STAMP ASME SECTION I (2001 EDITION)
- DESIGN PRESSURE: 490 PSIG @ 700° F
- HYDRO TEST PRESSURE: 735 PSIG
- SHELL SIDE DESIGN PRESSURE: ±25" W.C.
- HEADER: 3" x SCH 40-x SA-106-B MAT'L
- TUBE: 2" O.D. x .135" M.W. x SA-178-A MAT'L

CONFIDENTIAL PRINT
"PROPRIETARY DATA" IS INCLUDED IN THE INFORMATION DISCLOSED HEREIN AND IS THE SOLE PROPERTY OF KENTUBE ENGINEERED PRODUCTS. THIS INFORMATION IS SUBMITTED IN CONFIDENCE AND SHALL NOT BE USED OR DISCLOSED TO OTHERS FOR MANUFACTURING OR FOR ANY OTHER PURPOSE EXCEPT AS SPECIFICALLY AUTHORIZED IN WRITING BY

CERTIFIED FOR CONSTRUCTION
BY:

	DWN.	AWB	12/4/02
	CHKD.	TD	12/10/02

AWB 1/31/03

KENTUBE ENGINEERED PRODUCTS

Δ ECONOMIZER ARRANGEMENT UNIT #1
FOR NEBRASKA BOILER COMPANY

– To be cleaned

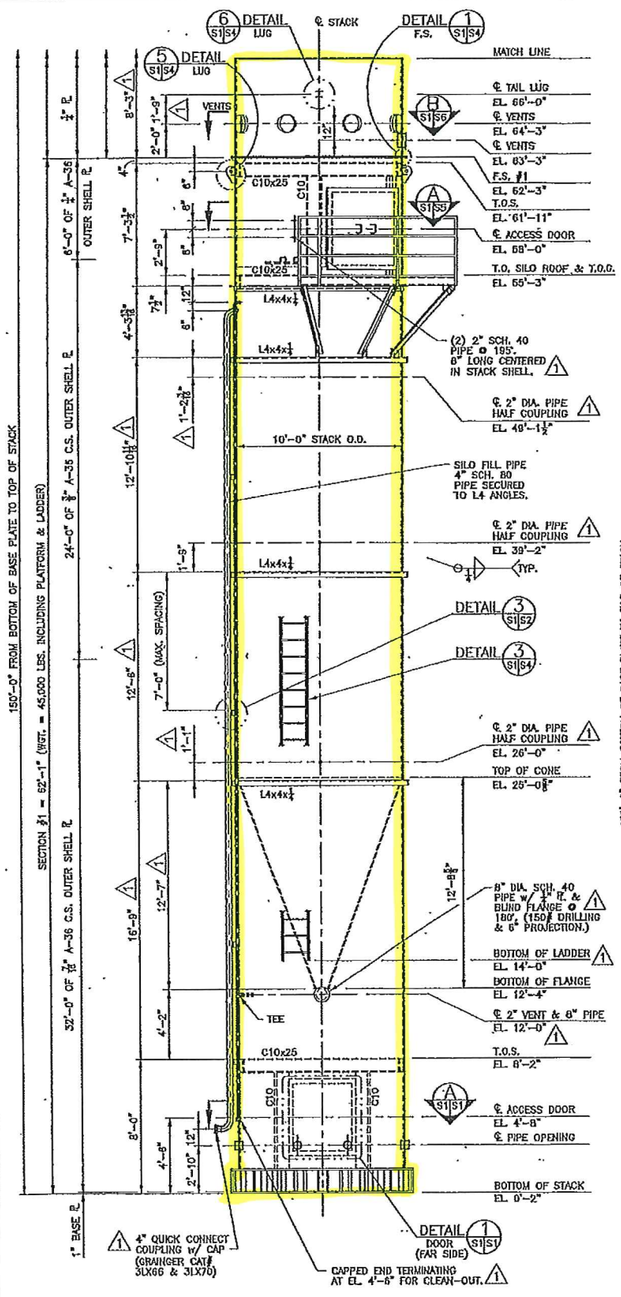

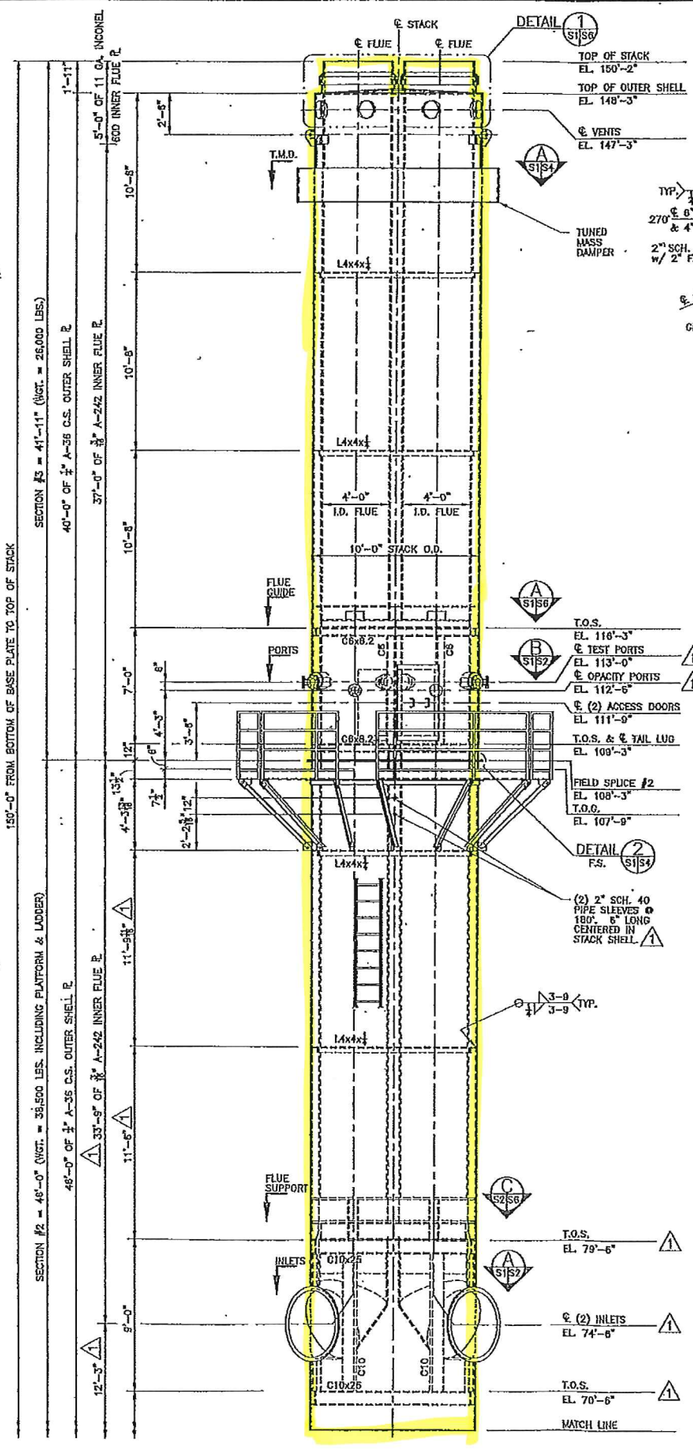

STACK ELEVATION
SCALE: ¼" = 1'-0"

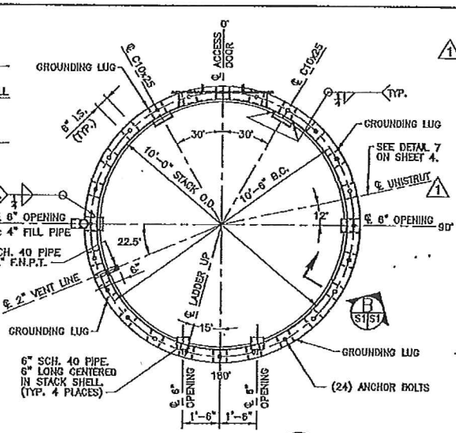

SECTION
SCALE: ⅜" = 1'-0"

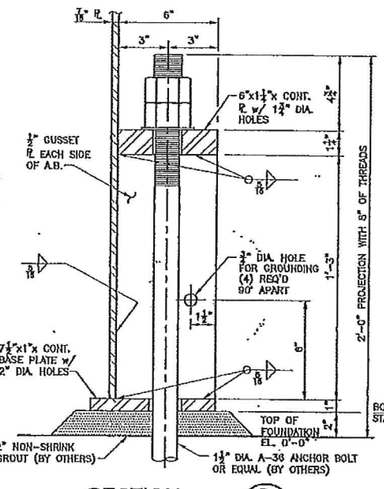

SECTION
N.T.S.

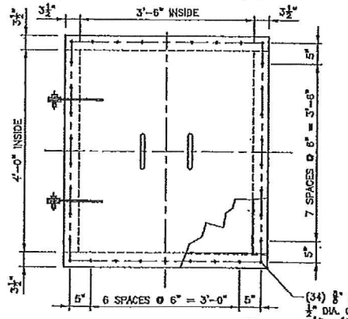

DETAIL
SCALE: ½" = 1'-0"

FOUNDATION DESIGN LOADS		
DEAD LOAD OF STACK (MAX.)	245	KIPS
DEAD LOAD OF STACK (MIN.)	100	KIPS
WIND SHEAR AT BASE OF STACK	25.5	KIPS
WIND MOMENT AT BASE OF STACK	2150	KIP-FT.
WIND CODE:	BOCA 99	
WIND SPEED	70 MPH	
IMPORTANCE FACTOR	1.0	
EXPOSURE CATEGORY	EXP. C	
SEISMIC LOADS DO NOT CONTROL		

GENERAL NOTES

1. MATERIAL
A. STACK OUTER SHELL PLATES AND ALL EXTERNAL AND INTERNAL COMPONENT PARTS SUCH AS ANCHOR BOLT CHAIR, STIFFENERS, TUNED MASS DAMPER, SILO ROOF, SILO CONE, AND LIFTING LUGS SHALL CONFORM TO ASTM A-36 CARBON STEEL UNLESS NOTED OTHERWISE. THE TWO INNER FLUES ALONG WITH THE FIELD SPLICE FLANGES ON THE INNER FLUES SHALL CONFORM TO ASTM A242 TYPE 1 HIGH STRENGTH SELF WEATHERING STEEL UNLESS NOTED OTHERWISE. THE TOP OF THE INNER FLUES AND COUNTERFLASHINGS FOR THE INNER FLUES SHALL BE INCONEL 600 UNLESS NOTED OTHERWISE.
B. THE OUTSIDE OF THE INNER FLUES SHALL BE INSULATED WITH TWO 1" LAYERS OF OWENS-CORNING TIW INSULATION. THE INSULATION SHOULD BE IMPALED ON 3/16" PIN STUDS SPACED 18" ON CENTERS WITH THE SEAMS STAGGERED TO PREVENT HOT SPOTS AND SECURED WITH SPEED CLIPS AND WIRE MESH. THE INNER FLUES SHALL BE LAGGED WITH AN EMBOSSED ALUMINUM LAGGING AT THE INTERIOR PLATFORM LOCATION TO A HEIGHT OF 6'-0" ABOVE THE GRATING AND AT THE OUTER SHELL PENETRATIONS.
C. THE PLATFORM AND LADDER SHALL BE FABRICATED FROM ASTM A-36 CARBON STEEL AND HOT DIPPED GALVANIZED UNLESS NOTED OTHERWISE.
D. ALL FASTENERS FOR ACCESS DOORS, TEST PORTS, FIELD SPLICES, PLATFORM, LADDER AND ANY OTHER BOLTING REQUIREMENTS SHALL BE GALVANIZED ASTM A-325 FASTENERS UNLESS NOTED OTHERWISE.

2. FABRICATION
ALL WORK SHALL BE FABRICATED IN ACCORDANCE WITH AISC "SPECIFICATIONS FOR STRUCTURAL STEEL BUILDINGS", LATEST EDITION. ALL WELDS SHALL BE MADE ONLY BY WELDING OPERATORS WHO HAVE BEEN PREVIOUSLY QUALIFIED BY TESTS AS PRESCRIBED IN THE AWS "STRUCTURAL WELDING CODE", OR BY THE ASME WELDING CODE, TO PERFORM THE TYPE WORK REQUIRED. ALL BUTT WELDS SHALL BE PRE-QUALIFIED, FULL PENETRATION WELDS AND SHALL DEVELOP THE FULL STRENGTH OF THE SECTION. SHELL GIRTH AND VERTICAL SEAMS SHALL BE COMPLETE PENETRATION BUTT GROOVE WELDS AND TOTALLY WELDED EITHER AUTOMATICALLY OR SEMI-AUTOMATICALLY BY THE SUBMERGED ARC WELDING PROCESS. ALL WELDING ELECTRODES AND FLUX SHALL CONFORM TO THE AWS CODE AND BE EQUIVALENT TO THE BASE METAL IN STRENGTH, CORROSION RESISTANCE, AND WEATHERED APPEARANCE.

3. TOLERANCES
A. BASE RING AND SPLICES MUST BE PERPENDICULAR TO THE STACK CENTERLINE SUCH THAT THE ERECTION OF THE STACK CAN BE PLUMBED TO WITHIN A MAXIMUM DEVIATION OF 1" PER 100' OF HEIGHT.
B. MAXIMUM OUT-OF-ROUNDNESS OF ANY SECTION – DIFFERENCE BETWEEN MINIMUM AND MAXIMUM DIAMETER – LESS THAN 1% OF THE NORMAL DIAMETER.
C. MAXIMUM MISALIGNMENT OF PLATES AT ANY JOINT SHALL NOT TO EXCEED 25% OF THE NORMAL THICKNESS OR 1/8", WHICHEVER IS LESS.
D. ADJOINING PLATE SECTIONS SHALL BE PAIRED FOR FULL 100% DEVELOPMENT.
E. PEAKING OF VERTICAL JOINTS SHALL NOT EXCEED 1/4" AS MEASURED FROM THE TRUE RADIUS OF THE STACK.
F. TEST PORT FLANGES SHALL BE PERPENDICULAR TO THE CENTERLINE TO WITHIN 1/2 DEGREE. FIELD SPLICE FLANGES MUST BE PERPENDICULAR TO THE STACK SHELL WITHIN 1/16".
G. STRUCTURAL PLATES ARE TO BE PURCHASED OF SUFFICIENT LENGTH TO ALLOW FOR ONLY ONE VERTICAL SEAM PER GIRTH. VERTICAL SEAMS ON ADJACENT SECTIONS WILL BE OFFSET BY 90 DEGREES. IN SPECIAL CASES, A MAXIMUM OF TWO VERTICAL SEAMS WILL BE OFFSET AT LEAST BY 90 DEGREES.
H. ALL APPURTENANCES, INCLUDING PLATFORMS AND LADDERS, SHALL BE SHOP ATTACHED TO ENSURE A GOOD FIT. ALL FIELD CONNECTIONS ARE TO BE CLEARLY MATCH MARKED.

4. INSPECTION AND TESTING
MATERIAL TEST REPORTS FOR ALL MATERIAL UTILIZED FOR MAJOR COMPONENTS AND FASTENERS SHALL BE SUBMITTED TO WARREN. THE MATERIAL TEST REPORTS ARE TO BE REQUESTED WHEN THE MATERIAL IS ORDERED AND FORWARDED TO WARREN IMMEDIATELY UPON RECEIPT. THE MSDS SHEETS ON THE TOUCH-UP PAINTS, THINNERS AND ANY OTHER HAZARDOUS MATERIAL IS TO BE INCLUDED WITH THE SHIPMENT OF THE ITEMS. ALL OF THE STACK WELDS SHALL BE 100% VISUALLY INSPECTED BY A AWS CERTIFIED WELDING INSPECTOR. THE STACK BUTT WELDS ON THE OUTER SHELL AND INNER FLUES SHALL BE RADIOGRAPHED. ONE SPOT FOR EVERY 10 FOOT LENGTH OF SHOP BUTT WELDS OF EACH SIZE SHALL BE RADIOGRAPHED. FILLET WELDS AND PARTIAL PENETRATION WELDS OCCURING AT THE BASE RING SHALL BE TESTED BY THE MAGNETIC PARTICAL METHOD AFTER BEING VISUALLY INSPECTED. AT LEAST 1 FOOT OF EVERY 10 FOOT LENGTH OF WELD, OF EACH SIZE SHALL BE TESTED. FILLET WELDS SHALL BE GROUND SMOOTH AS REQUIRED TO FACILITATE TESTING, BUT SHALL HAVE THE REQUIRED CROSS-SECTION BEFORE TESTING IS STARTED. ACCEPTANCE CRITERIA FOR ALL NON DESTRUCTIVE TESTING SHALL BE IN ACCORDANCE WITH AWS D1.1.

5. SURFACE PREPARATION
A. ALL SHARP PROJECTIONS SHALL BE GROUND SMOOTH
B. ALL WELD FLUX AND SPLATTER SHALL BE REMOVED BY POWER TOOL CLEANING.
C. ALL EXTERIOR AND INTERIOR SURFACES OF THE OUTER SHELL INCLUDING SUPPPORT STEEL AND FLUE GUIDES ARE TO BE CLEANED PER AN SSPC-SP10 SANDBLAST CLEANING WITH THE EXCEPTION OF THE INTERIOR OF THE SILO AREA THAT WILL BE IN CONTACT WITH THE HYDRATED LIME. THE INCONEL TOP CAP, AND COUNTERFLASHINGS SHALL RECEIVE A POWER TOOL AND SOLVENT CLEANING PER SSPC-SP3. THE ASTM A242 INNER FLUES DO NOT REQUIRE CLEANING.

6. PAINTING SPECIFICATION
APPLY ONE PRIME COAT OF AMERON AMERCOAT 68HS AT 3 MILS DFT TO ALL EXTERIOR AND INTERIOR SURFACES OF THE OUTER SHELL WITH THE EXCEPTION OF THE SILO AREA THAT WILL BE IN CONTACT WITH THE HYDRATED LIME. THE EXTERIOR OF THE OUTER SHELL SHALL BE TOP COATED WITH AMERON PSX 700 AT 5 TO 7 MILS DFT (FINISH COLOR SHALL BE CLAY TAN – #1600). THE INCONEL TOP CAP, FLUES AND COUNTERFLASHING SHALL NOT BE PAINTED. INCLUDE 2 GALLONS OF TOUCH-UP PAINT WITH SHIPMENT. ALL TEMPORARY ITEMS THAT MUST BE REMOVED SHALL BE PAINTED YELLOW.

7. LOADING AND SHIPPING
THE STACK WILL BE LOADED AND SECURED ON TRUCKS SUCH THAT PLATES ARE NOT DEFORMED AND THE PAINT SYSTEM IS NOT COMPROMISED. STACK LOADS ARE TO BE DISTRIBUTED OVER LARGE AREAS. POINT LOADS OR PLATES ARE TO BE AVOIDED. TIMBERS USED TO SECURE LOADS ARE TO BE PLACED LONGITUDINALLY, SPANNING AT LEAST TWO STIFFENERS. THE ERECTOR IS TO REMOVE ALL TEMPORARY SPACERS AND BRACES BEFORE COMPLETING THE ERECTION.

DOC CONTROL
DEC 2 0 2002
RECEIVED

COMMONWEALTH OF VIRGINIA
RICHARD SCOTT SLAY
No. 0402 038088
12/19/02
PROFESSIONAL ENGINEER

CERTIFIED FOR CONSTRUCTION
FILE# S220

HARRISONBURG RESOURCE RECOVERY FACILITY
BPI P.O. # 60150012
BPI TAG #: OFG-STK001
BPI FILE #: S220
BPI CONTRACT #: 6015
HARRISONBURG VIRGINIA

STACK ELEVATION & DETAILS

WARREN ENVIRONMENT, INC.
5075 ROSWELL ROAD ATLANTA, GA 30342

	MADE	CHK'D.
DRAWN:	JAB	
DESIGN:		
DATE:	10-29-02	
SCALE:	AS SHOWN	

1	12-1802	GENERAL REVISIONS	JAB	

CUSTOMER DWG. NO.
WARREN DWG. NO.

CAD FILE: 02-46-1 DATE: 10-29-02 SCALE: ¼"=1'-0"

– Specific cleanup/demolition/removal requirements (See project documents)

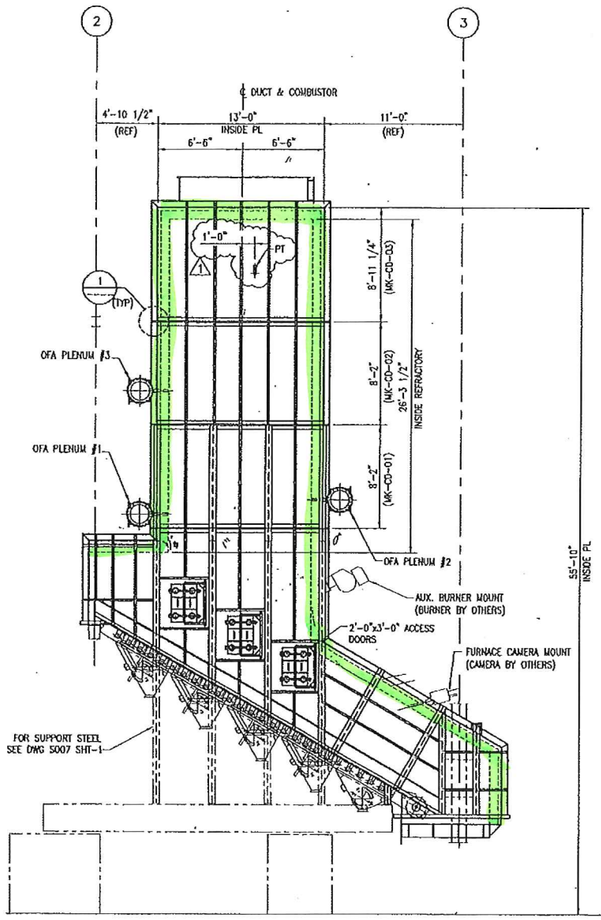

EAST ELEVATION – COMBUSTOR
3/16"=1'-0" (UNIT #1 SHOWN)

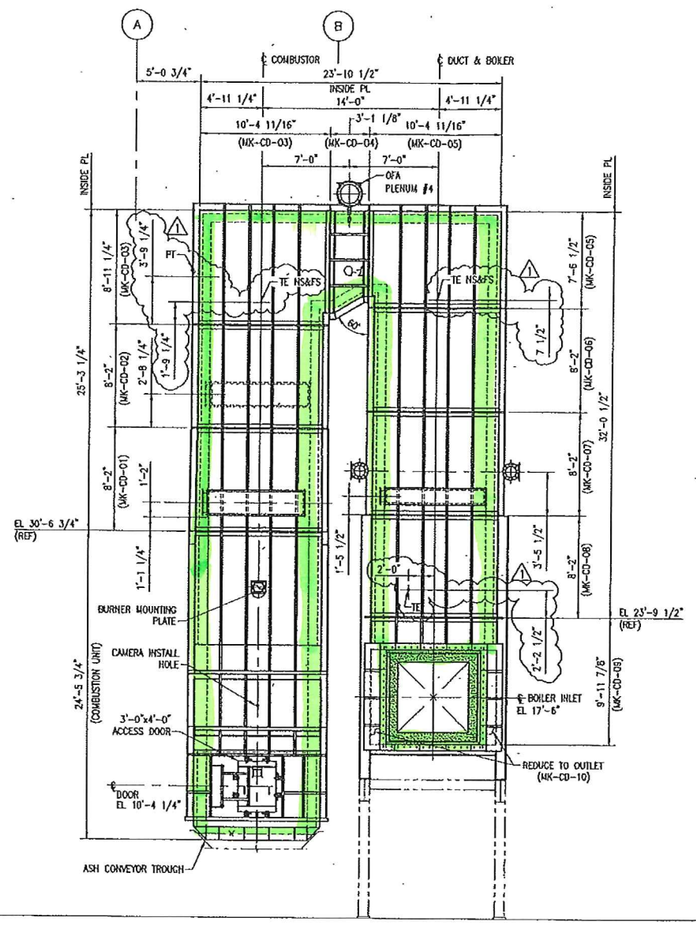

NORTH ELEVATION
3/16"=1'-0" (UNIT #1 SHOWN)

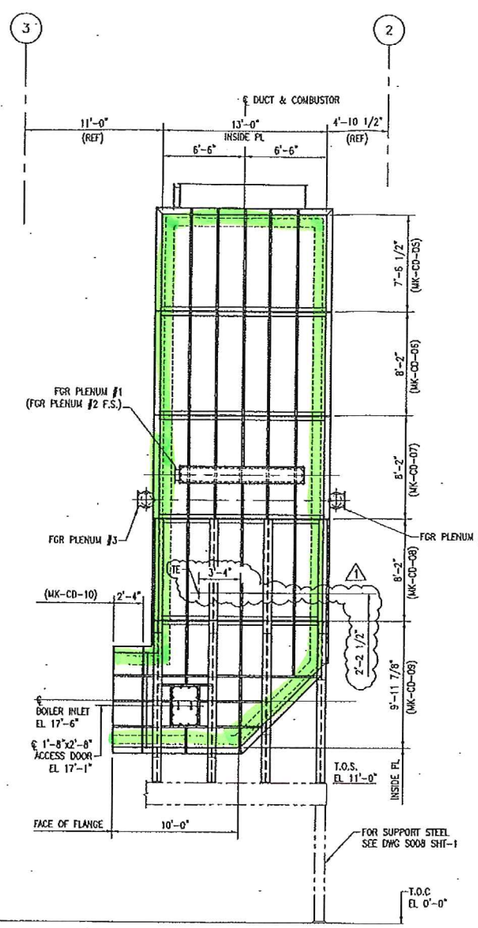

WEST ELEVATION – BOILER DUCT
3/16"=1'-0" (UNIT #1 SHOWN)

NOTES:

1. FOR ADDITIONAL TECHNICAL REQUIREMENTS SEE COMBUSTOR SPECIFICATION.
2. ALL COMBUSTOR SHELL PLATES TO BE 3/16" A36 UNLESS OTHERWISE NOTED.
3. ALL SHELL PLATE JOINTS SHALL BE MADE WITH FULL PENETRATION WELDS.

REFERENCE DRAWINGS:

BARLOW ENGINEERING SERVICES

F020–SHT 1 COMBUSTOR FOUNDATION MODIFICATIONS

S008–SHT 2 BOILER SUPPORT FRAME

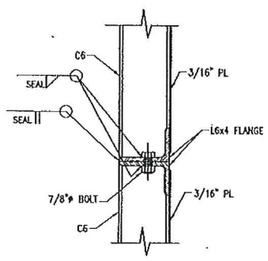

DETAIL 1
1 1/2" = 1'-0"

PROPRIETARY & CONFIDENTIAL

THIS EQUIPMENT AND PROCESS IS PROTECTED UNDER U.S. PATENT NUMBERS 4,955,296 AND 5,044,288. OTHER U.S. AND INTERNATIONAL PATENTS PENDING.

REV	DATE	DESCRIPTION	DWG	CHK	APP
1	11/1/02	ADDED PRESSURE AND THERMAL TAPS	DWS	CHK	ITL
0	1/1/00	ISSUED FOR FABRICATION	DWS	CHK	ITL

THIS DOCUMENT AND THE INFORMATION IT CONTAINS ARE THE PROPERTY OF BARLOW ENGINEERING, LLC, ARE DISCLOSED IN CONFIDENCE FOR LIMITED USE AND MUST BE SURRENDERED TO BARLOW ENGINEERING, LLC ON DEMAND.

DISCLOSURE, PUBLICATION OR DISTRIBUTION OF THIS DOCUMENT WITHOUT PRIOR WRITTEN AUTHORIZATION FROM BARLOW ENGINEERING, LLC IS STRICTLY PROHIBITED.

COPYRIGHT BARLOW ENGINEERING, LLC AS OF THE DATE DRAWN OR REVISED.

Barlow Engineering Services, LLC.
116 Inverness Drive East
Englewood, CO
E-mail: mail@barlowprojects.com
Phone: (303) 792-0248
Fax: (303) 799-1233
Web: www.barlowprojects.com

BEI PROJECT NO.	5015	
DESIGNED BY:	DWS	9/19/02
DRAWN BY:	DWS	9/19/02
CHECKED BY:	DTH	10/8/02
APPROVED BY:	ITL	10/8/02
SCALE:	AS NOTED	
	DO NOT SCALE THIS DRAWING. USE DIMENSIONS ONLY.	

DRAWING TITLE: COMBUSTION UNIT GENERAL ARRANGEMENT

DRAWING NUMBER: S020

PROJECT: HARRISONBURG RESOURCE RECOVERY FACILITY

SHEET NUMBER: 1 REV: 1

- Specific Cleaning/demolition/removal requirements (See project documents)

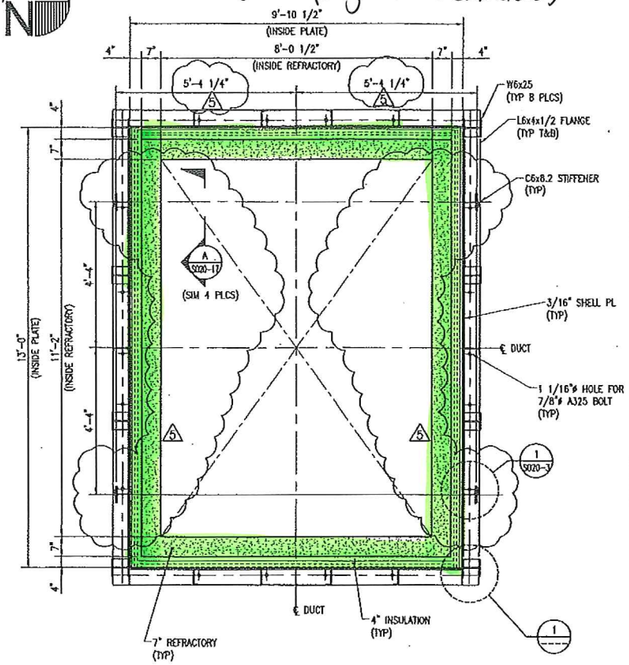

MK-CD-01 PLAN
1/2"=1'-0" (UPPER FLANGE)

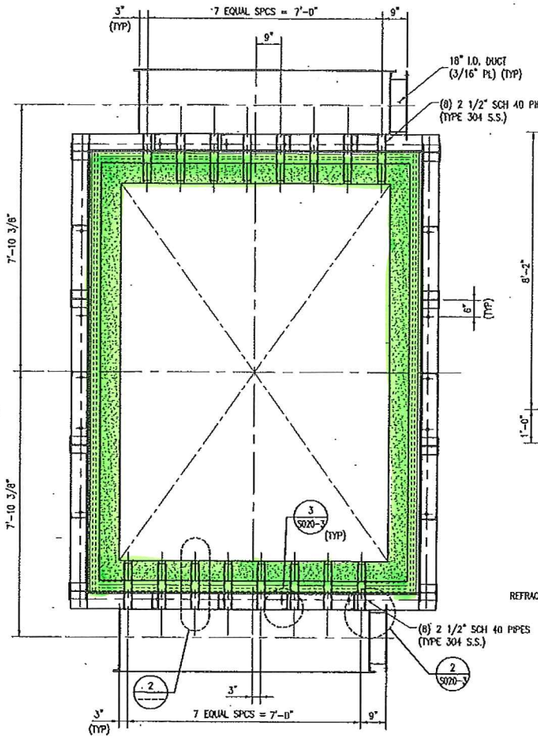

PLAN - OFA PLENUMS
1/2"=1'-0"

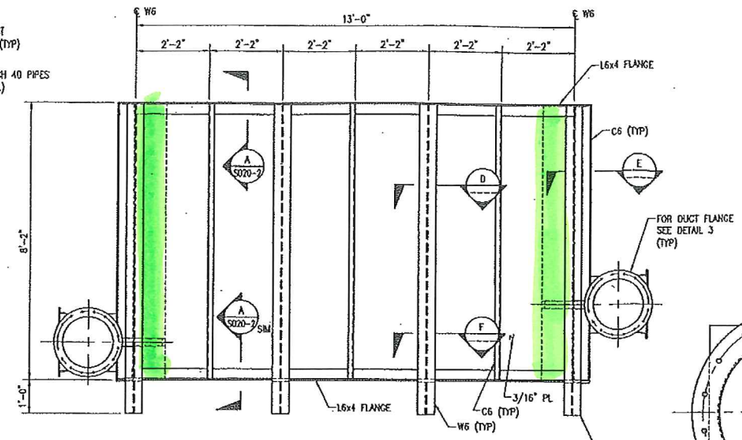

MK-CD-01 EAST ELEVATION
1/2"=1'-0" (WEST ELEVATION SIMILAR)

NOTES:

1. WORK THIS DRAWING WITH DRAWING S020 SHT-1.
2. FOR ADDITIONAL TECHNICAL REQUIREMENTS SEE COMBUSTOR SPECIFICATION.
3. ALL COMBUSTOR SHELL PLATES TO BE 3/16" A36 UNLESS OTHERWISE NOTED.
4. ALL SHELL PLATE JOINTS SHALL BE MADE WITH FULL PENETRATION WELDS.
5. MAXIMUM WEIGHT OF MK-CD-01 WITH INSULATION AND REFRACTORY IS 41,500 POUNDS.
6. FOR LIFTING LUG DETAILS, SEE DRAWING S020 SHT-17. (5)

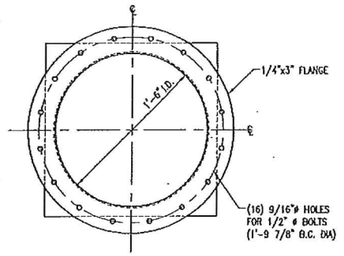

DETAIL 3
1 1/2" = 1'-0"

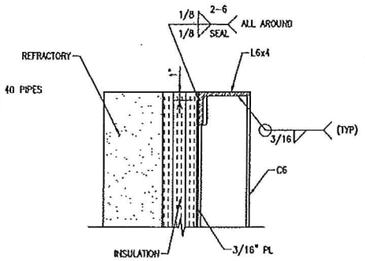

SECTION A
1 1/2" = 1'-0"

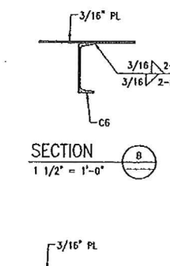

SECTION B
1 1/2" = 1'-0"

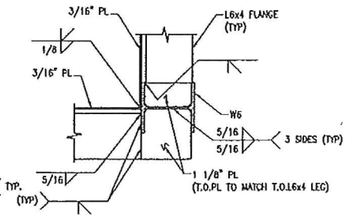

DETAIL 1
1 1/2" = 1'-0"

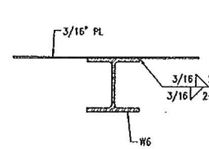

SECTION D
1 1/2" = 1'-0"

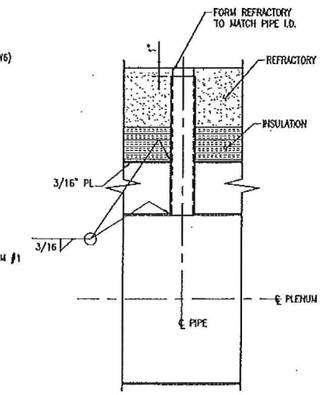

DETAIL 2
1 1/2" = 1'-0"

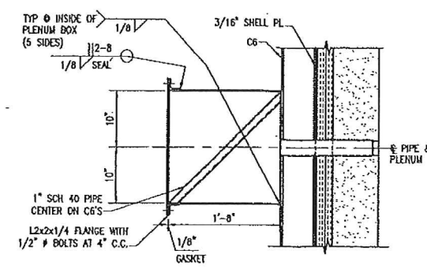

SECTION C
1" = 1'-0"

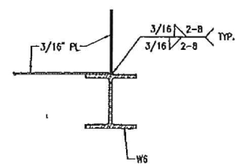

SECTION E
1 1/2" = 1'-0"

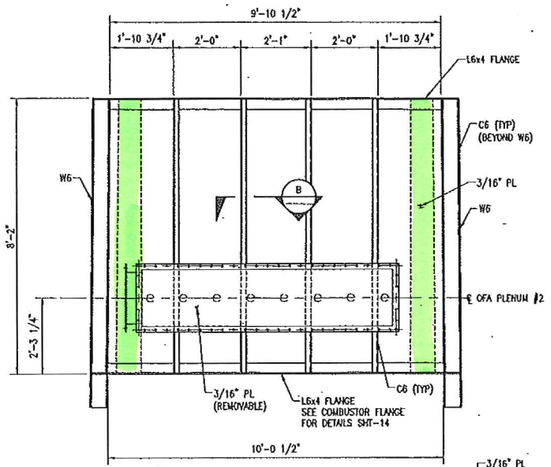

MK-CD-01 NORTH ELEVATION
1/2"=1'-0"

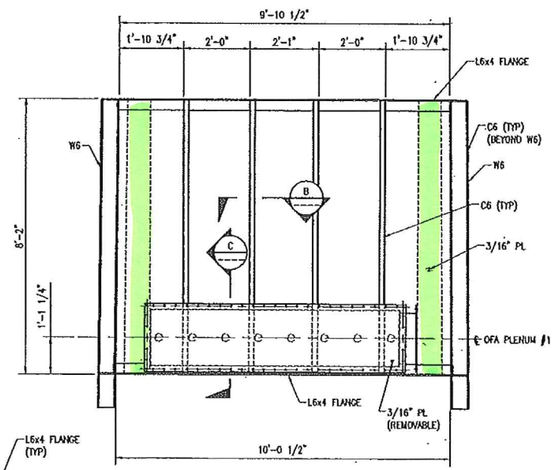

MK-CD-01 SOUTH ELEVATION
1/2"=1'-0"

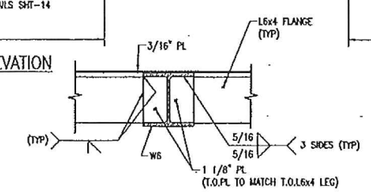

SECTION F
1 1/2" = 1'-0"

THIS EQUIPMENT AND PROCESS IS PROTECTED UNDER U.S. PATENT NUMBERS 4,955,296 AND 5,044,288. OTHER U.S. AND INTERNATIONAL PATENTS PENDING.

REV	DATE	DESCRIPTION	DWG	CHK	APP
5	9/27/05	ADDED LIFTING LUGS	DNS	CFH	EPW
4	1/13/03	REVISED INSULATION & REFRACTORY	DNS	CFH	DNS
3	12/13/02	REVISED DUCT WIDTH @ LOWER FLANGE	DNS	CFH	DNS
2	10/24/02	ADDED W8 STIFFENERS @ EXPANSION CHANGED C8 TO W8 STIFFENERS @ DUCT	DNS	CFH	FCL
1	10/11/02	REMOVED HOLES ON PLENUM BOXES ADDED B.S. NO. TYPE FOR PIPES	DNS	CFH	FCL
0	10/8/02	ISSUED FOR FABRICATION	DNS	CFH	FCL

THIS DOCUMENT AND THE INFORMATION IT CONTAINS ARE THE PROPERTY OF BARLOW ENGINEERING, LLC, ARE DISCLOSED IN CONFIDENCE FOR LIMITED USE AND MUST BE SURRENDERED TO BARLOW ENGINEERING, LLC ON DEMAND.

DISCLOSURE, PUBLICATION OR DISTRIBUTION OF THIS DOCUMENT WITHOUT PRIOR WRITTEN AUTHORIZATION FROM BARLOW ENGINEERING, LLC IS STRICTLY PROHIBITED.

COPYRIGHT BARLOW ENGINEERING, LLC AS OF THE DATE DRAWN OR REVISED.

Barlow Engineering Services, LLC.
114 Inverness Drive East
Englewood, CO
E-mail: mtg@barlowprojects.com
Phone: (303) 792-9248
Fax: (303) 799-1318
Web: www.barlowprojects.com

BPI PROJECT NO.	8015
DESIGNED BY:	DNS 8/17/02
DRAWN BY:	DNS 8/17/02
CHECKED BY:	CFH 10/8/02
APPROVED BY:	FCL 10/8/02
SCALE:	AS NOTED

DO NOT SCALE THIS DRAWING. USE DIMENSIONS ONLY.

DRAWING TITLE: COMBUSTOR
COMBUSTOR DUCT
MK-CD-01

DRAWING NUMBER: S020

PROJECT: HARRISONBURG RESOURCE RECOVERY FACILITY

SHEET NUMBER: 2 REV: 5

PROPRIETARY & CONFIDENTIAL

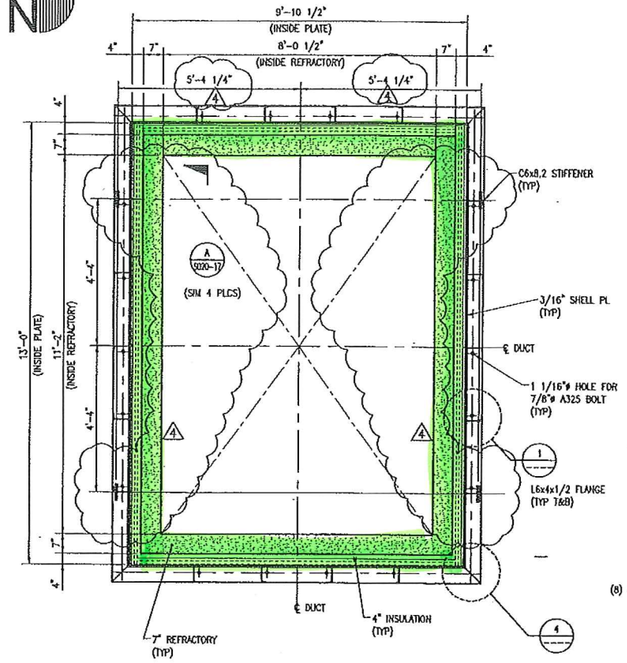

MK-CD-02 PLAN
1/2"=1'-0"

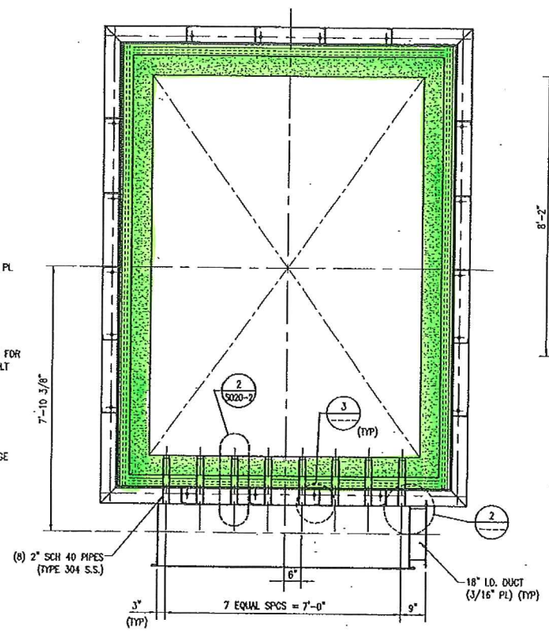

PLAN - OFA PLENUMS
1/2"=1'-0"

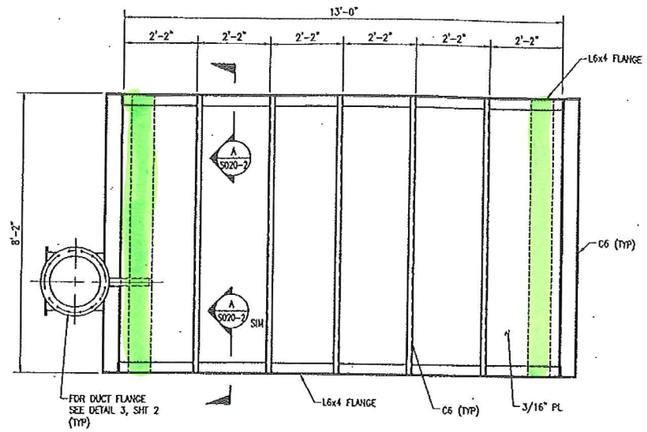

MK-CD-02 EAST ELEVATION
1/2"=1'-0" (WEST ELEVATION SIMILAR)

NOTES:

1. WORK THIS DRAWING WITH DRAWING S020 SHT-1.
2. FOR ADDITIONAL TECHNICAL REQUIREMENTS SEE COMBUSTOR SPECIFICATION.
3. ALL SHELL PLATE JOINTS SHALL BE MADE WITH FULL PENETRATION WELDS.
4. MAXIMUM WEIGHT OF MK-CD-02 WITH INSULATION AND REFRACTORY IS 41,000 POUNDS.
5. FOR LIFTING LUG DETAILS, SEE DRAWING S020 SHT-17.

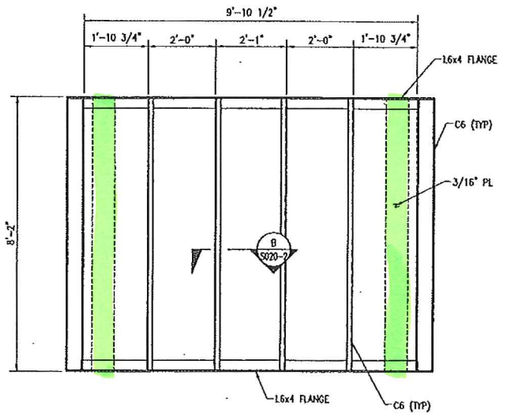

MK-CD-02 NORTH ELEVATION
1/2"=1'-0"

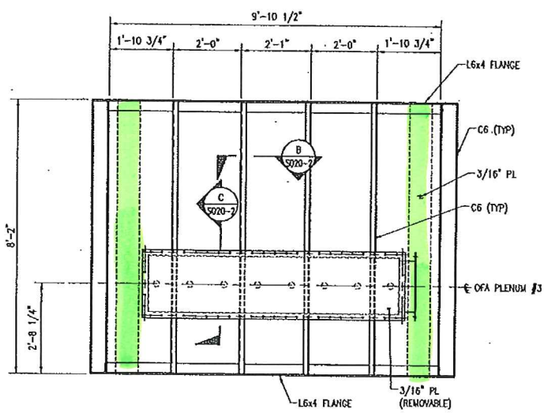

MK-CD-02 SOUTH ELEVATION
1/2"=1'-0"

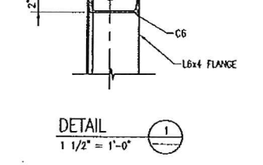

DETAIL 1
1 1/2" = 1'-0"

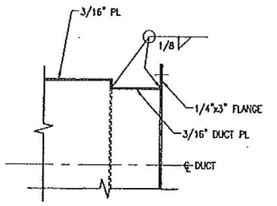

DETAIL 2
1 1/2" = 1'-0"

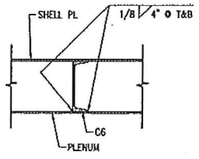

DETAIL 3
1 1/2" = 1'-0"

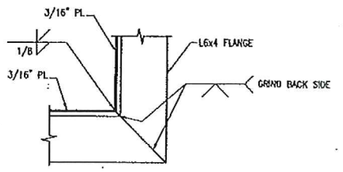

DETAIL 4
1 1/2" = 1'-0"

Specific cleaning/conditioned removal requirements (See project documents)

PROPRIETARY & CONFIDENTIAL

THIS EQUIPMENT AND PROCESS IS PROTECTED UNDER U.S. PATENT NUMBERS 4,955,296 AND 5,044,288. OTHER U.S. AND INTERNATIONAL PATENTS PENDING.

REV.	DATE	DESCRIPTION	BY	CHK	APP
4	11/25/02	ADDED LIFTING LUGS	DWS	CFH	FEL
3	11/14/02	REVISED INSULATION & REFRACTORY	DWS	CFH	FEL
2	10/31/02	ADDED DETAIL 4, REVISED DETAIL CALLOUT	DWS	CFH	FEL
1	10/11/02	REMOVED HOLD ON PLENUM BOX ADDED S.S. MTL TYPE FOR PIPES	DWS	CFH	FEL
0	10/8/02	ISSUED FOR FABRICATION	DWS	CFH	FEL

THIS DOCUMENT AND THE INFORMATION IT CONTAINS ARE THE PROPERTY OF BARLOW ENGINEERING, LLC, ARE DISCLOSED IN CONFIDENCE FOR LIMITED USE AND MUST BE SURRENDERED TO BARLOW ENGINEERING, LLC ON DEMAND.

DISCLOSURE, PUBLICATION OR DISTRIBUTION OF THIS DOCUMENT WITHOUT PRIOR WRITTEN AUTHORIZATION FROM BARLOW ENGINEERING, LLC IS STRICTLY PROHIBITED.

COPYRIGHT BARLOW ENGINEERING, LLC AS OF THE DATE DRAWN OR REVISED.

Barlow Engineering Services, LLC.
116 Inverness Drive East
Englewood, CO
E-mail: mgg@barlow-projects.com
Phone: (303) 792-0243
Fax: (303) 799-1231
Web: www.barlow-projects.com

BES PROJECT NO.	6015	
DESIGNED BY:	DWS	9/2002
DRAWN BY:	DWS	9/25/02
CHECKED BY:	CFH	10/8/02
APPROVED BY:	FEL	10/8/02
SCALE:	AS NOTED	
	DO NOT SCALE THIS DRAWING. USE DIMENSIONS ONLY.	

DRAWING TITLE:
COMBUSTOR
COMBUSTOR DUCT
MK-CD-02

PROJECT:
HARRISONBURG RESOURCE RECOVERY FACILITY

DRAWING NUMBER:
S020

SHEET NUMBER: 3
REV: 4

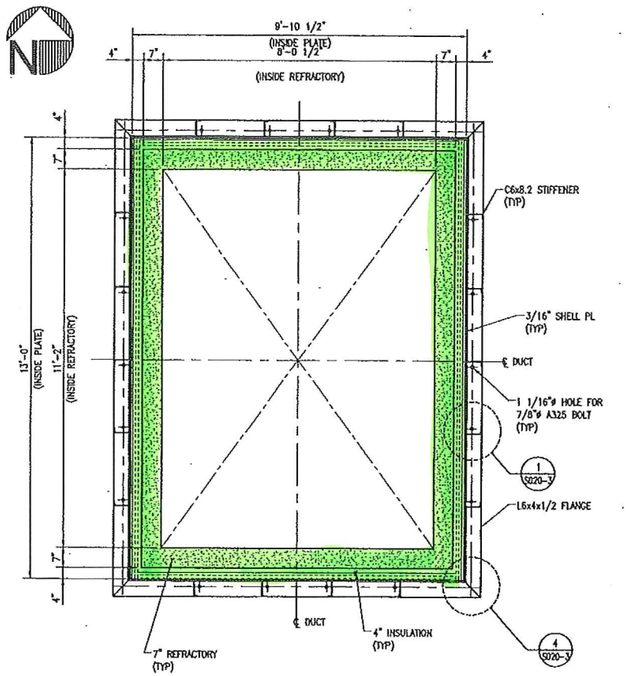

MK-CD-03 LOWER FLANGE PLAN
1/2"=1'-0"

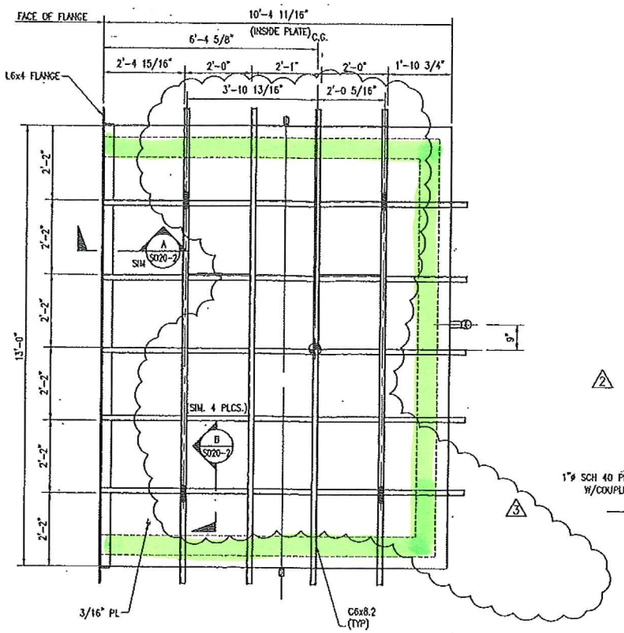

MK-CD-03 ROOF PLAN
1/2"=1'-0"

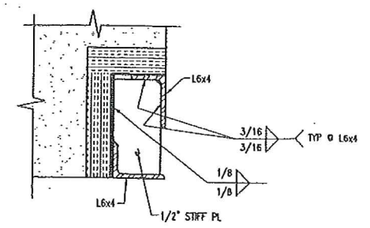

DETAIL 1
1 1/2" = 1'-0"

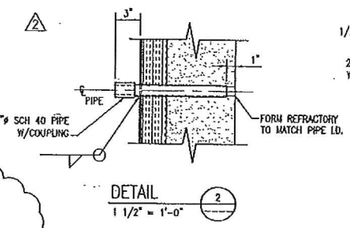

DETAIL 2
1 1/2" = 1'-0"

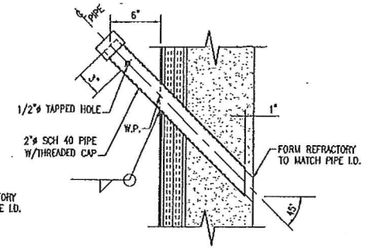

DETAIL 3
1 1/2" = 1'-0"

NOTES:

1. WORK THIS DRAWING WITH DRAWING S020 SHT-1.
2. FOR ADDITIONAL TECHNICAL REQUIREMENTS SEE COMBUSTOR SPECIFICATION.
3. MAXIMUM WEIGHT OF MK-CD-03 WITH INSULATION AND REFRACTORY IS 53,000 POUNDS.
4. FOR LIFTING LUG DETAILS, SEE DRAWING S020 SHT-17.

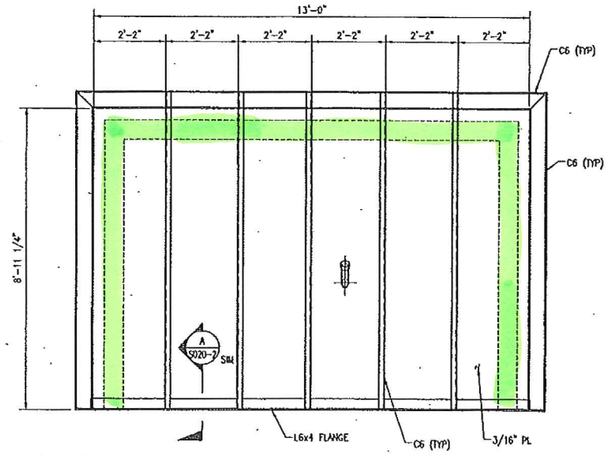

MK-CD-03 EAST ELEVATION
1/2"=1'-0"

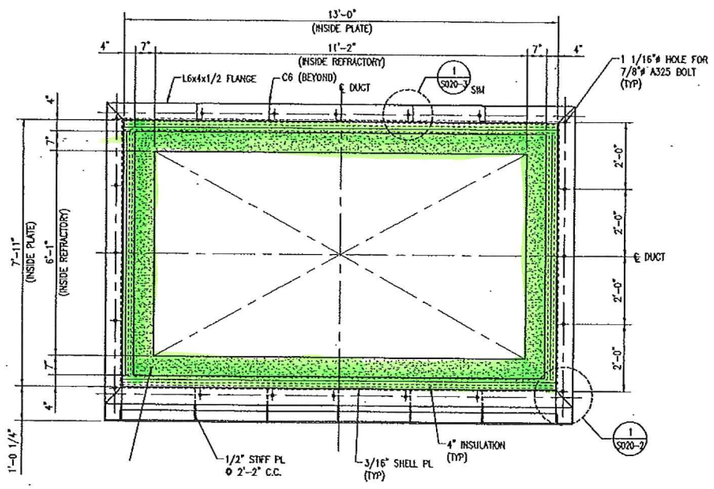

MK-CD-03 WEST ELEVATION
1/2"=1'-0"

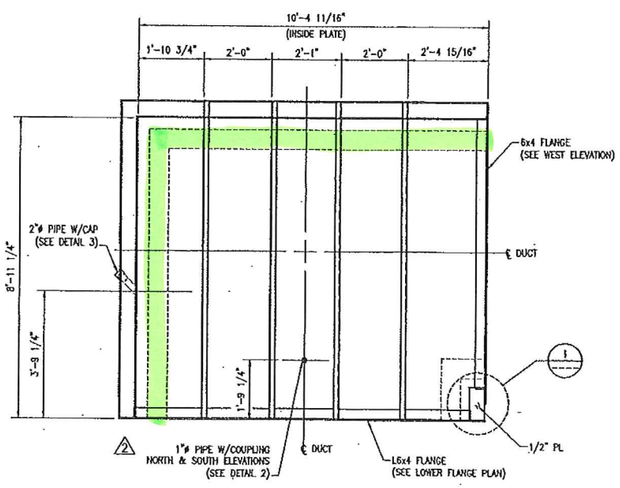

MK-CD-03 NORTH ELEVATION
1/2"=1'-0"

THIS EQUIPMENT AND PROCESS IS PROTECTED UNDER U.S. PATENT NUMBERS 4,955,296 AND 5,044,288. OTHER U.S. AND INTERNATIONAL PATENTS PENDING.

— Specific cleaning/demolition removal requirements (See project documents)

PROPRIETARY & CONFIDENTIAL

REV	DATE	DESCRIPTION	DR	CH	APP
3	11/25/02	ADDED LIFTING LUGS	DNS	CFH	
2	11/13/02	ADDED PRESSURE AND THERMAL SYS REV. INSULATION & REFRACTORY	DNS	CFH	
1	10/21/02	REVISED DETAIL CALLOUT	DNS	CFH	FTL
0	10/11/02	ISSUED FOR FABRICATION	DNS	CFH	FTL

THIS DOCUMENT AND THE INFORMATION IT CONTAINS ARE THE PROPERTY OF BARLOW ENGINEERING, LLC, ARE DISCLOSED IN CONFIDENCE FOR LIMITED USE AND MUST BE SURRENDERED TO BARLOW ENGINEERING, LLC ON DEMAND.

DISCLOSURE, PUBLICATION OR DISTRIBUTION OF THIS DOCUMENT WITHOUT PRIOR WRITTEN AUTHORIZATION FROM BARLOW ENGINEERING, LLC IS STRICTLY PROHIBITED.

COPYRIGHT BARLOW ENGINEERING, LLC AS OF THE DATE DRAWN OR REVISED.

Barlow Engineering Services, LLC.
116 Inverness Drive East
Englewood, CO
E-mail: mail@barlowprojects.com
Phone: (303) 799-0244
Fax: (303) 799-1271
Web: www.barlowprojects.com

BES PROJECT NO.	6015
DESIGNED BY:	DNS 10/3/02
DRAWN BY:	DNS 10/3/02
CHECKED BY:	CFH 10/11/02
APPROVED BY:	FTL 10/11/02
SCALE:	AS NOTED
	DO NOT SCALE THIS DRAWING. USE DIMENSIONS ONLY.

DRAWING TITLE: COMBUSTOR
COMBUSTOR DUCT
MK-CD-03

DRAWING NUMBER: S020

PROJECT: HARRISONBURG RESOURCE RECOVERY FACILITY

SHEET NUMBER: 4 REV: 3

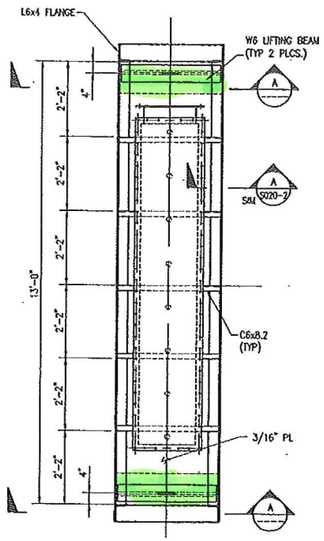

MK-CD-04 ROOF PLAN
1/2"=1'-0"

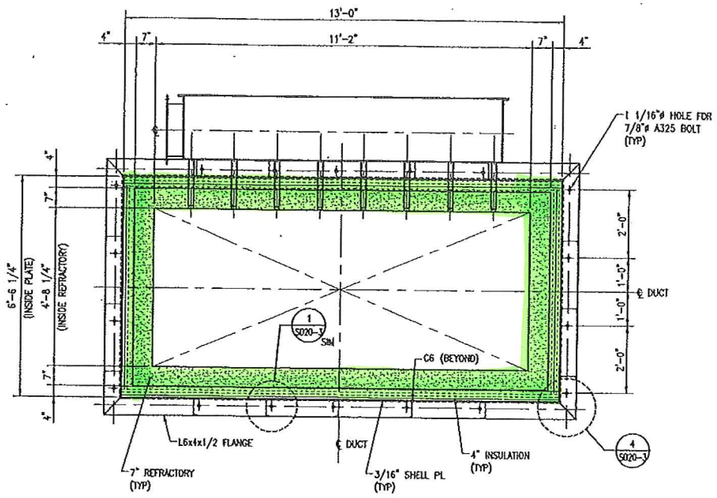

MK-CD-04 WEST ELEVATION
1/2"=1'-0"

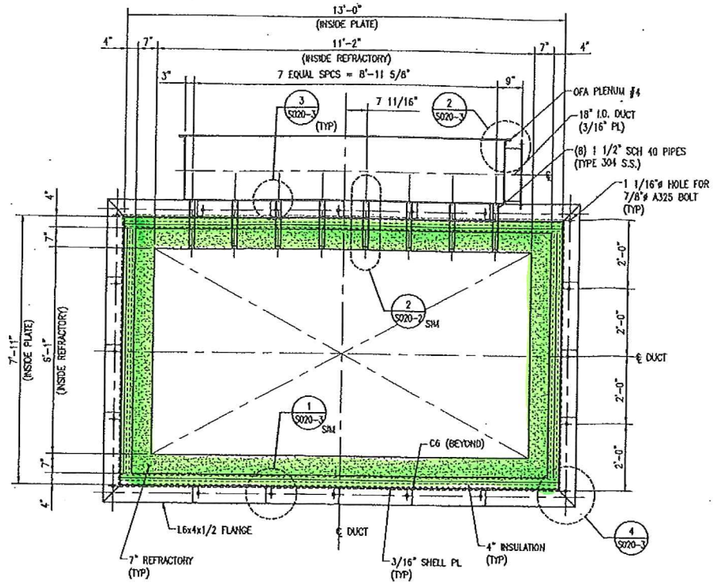

MK-CD-04 EAST ELEVATION
1/2"=1'-0"

NOTES:

1. WORK THIS DRAWING WITH DRAWING S020 SHT-1.
2. FOR ADDITIONAL TECHNICAL REQUIREMENTS SEE COMBUSTOR SPECIFICATION.
3. MAXIMUM WEIGHT OF MK-CD-04 WITH INSULATION AND REFRACTORY IS 19,000 POUNDS.
4. FOR LIFTING BEAM DETAILS, SEE DRAWING S090 SHT 2.

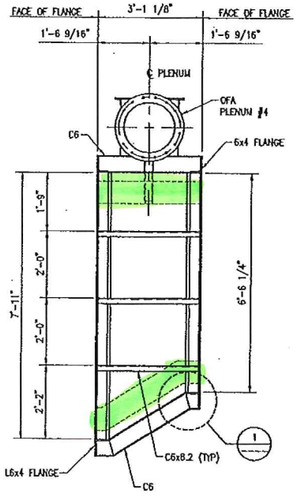

MK-CD-04 NORTH ELEVATION
1/2"=1'-0" (SOUTH ELEVATION OPP HAND)

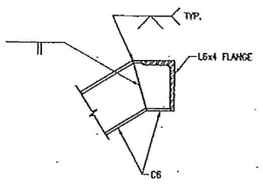

DETAIL
1 1/2"=1'-0"
1

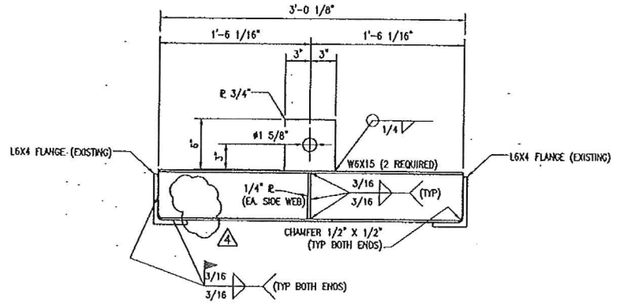

SECTION
1 1/2"=1'-0"
A

Specific cleanup/demolition removal requirements (See project documents)

PROPRIETARY & CONFIDENTIAL

THIS EQUIPMENT AND PROCESS IS PROTECTED UNDER U.S. PATENT NUMBERS 4,955,296 AND 5,044,288. OTHER U.S. AND INTERNATIONAL PATENTS PENDING.

REV	DATE	DESCRIPTION	BY	CHK	APP
4	5/29/03	REMOVED STONER NOTE	DWG	DWS	FEL
3	4/23/03	ADDED LIFTING LUGS	DWG	DWS	FEL
2	1/13/03	REVISED INSULATION & REFRACTORY	DWG	DWS	CFH
1	10/24/02	REVISED DIMENSIONS	DWG	DWS	CFH
0	10/11/02	ISSUED FOR FABRICATION	DWG	DWS	CFH

THIS DOCUMENT AND THE INFORMATION IT CONTAINS ARE THE PROPERTY OF BARLOW ENGINEERING, LLC, ARE DISCLOSED IN CONFIDENCE FOR LIMITED USE, AND MUST BE SURRENDERED TO BARLOW ENGINEERING, LLC ON DEMAND.

DISCLOSURE, PUBLICATION OR DISTRIBUTION OF THIS DOCUMENT WITHOUT PRIOR WRITTEN AUTHORIZATION FROM BARLOW ENGINEERING, LLC IS STRICTLY PROHIBITED.

COPYRIGHT BARLOW ENGINEERING, LLC AS OF THE DATE DRAWN OR REVISED.

Barlow Engineering Services, LLC.
116 Inverness Drive East
Englewood, CO
E-mail: eagle@barlowprojects.com
Phone: (303) 792-0248
Fax: (303) 799-1328
Web: www.barlowprojects.com

BPI PROJECT NO:	6015	
DESIGNED BY:	DWS	10/7/02
DRAWN BY:	DWS	10/7/02
CHECKED BY:	CFH	10/11/02
APPROVED BY:	FEL	10/11/02
SCALE:	AS NOTED	
	DO NOT SCALE THIS DRAWING. USE DIMENSIONS ONLY.	

DRAWING TITLE: COMBUSTOR
COMBUSTOR DUCT
MK-CD-04

DRAWING NUMBER: S020

PROJECT: HARRISONBURG RESOURCE RECOVERY FACILITY

SHEET NUMBER: 5 REV: 4

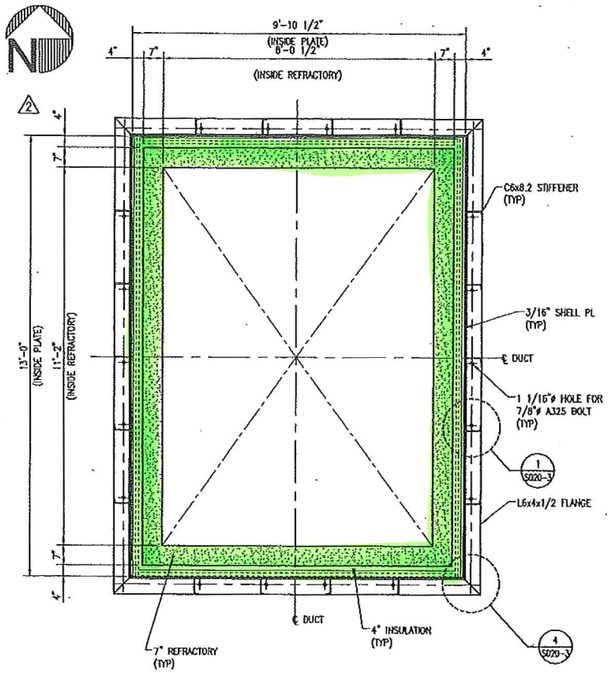

MK-CD-05 LOWER FLANGE PLAN
1/2"=1'-0"

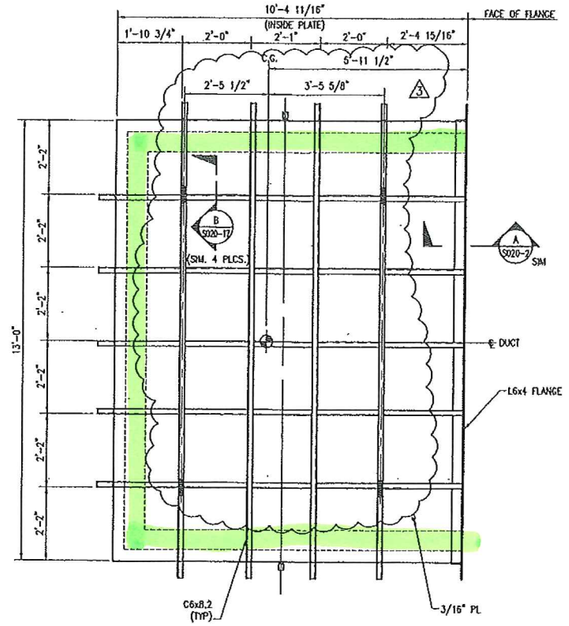

MK-CD-05 ROOF PLAN
1/2"=1'-0"

NOTES:

1. WORK THIS DRAWING WITH DRAWING S020 SHT-1.
2. FOR ADDITIONAL TECHNICAL REQUIREMENTS SEE COMBUSTOR SPECIFICATION.
3. MAXIMUM WEIGHT OF MK-CD-05 WITH INSULATION AND REFRACTORY IS 48,000 POUNDS.
4. FOR LIFTING LUG DETAILS SEE DRAWING S020 SHT-17.

3

— Specific cleaning/demolition removal requirements (See project documents)

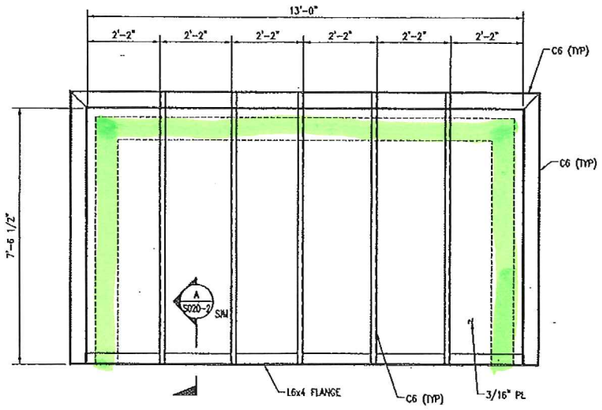

MK-CD-05 WEST ELEVATION
1/2"=1'-0"

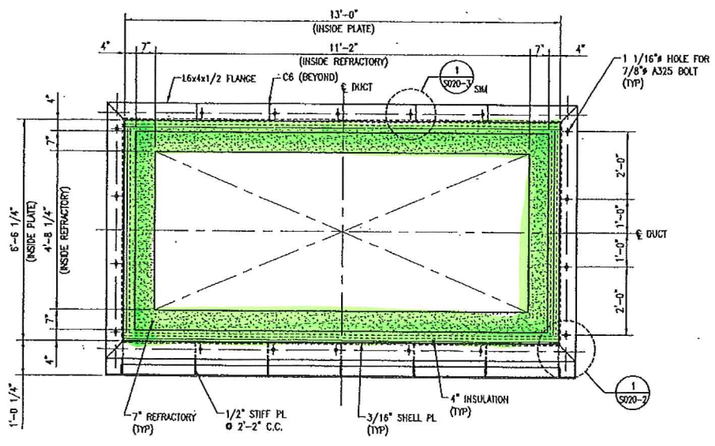

MK-CD-05 EAST ELEVATION
1/2"=1'-0"

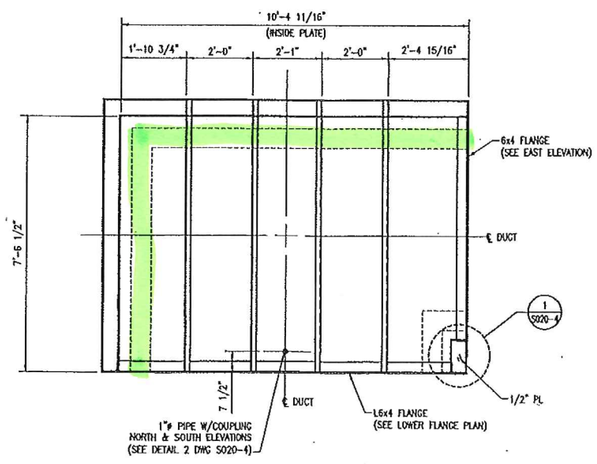

MK-CD-05 SOUTH ELEVATION
1/2"=1'-0"

THIS EQUIPMENT AND PROCESS IS PROTECTED UNDER U.S. PATENT NUMBERS 4,955,296 AND 5,044,288. OTHER U.S. AND INTERNATIONAL PATENTS PENDING.

PROPRIETARY & CONFIDENTIAL

REV	DATE	DESCRIPTION	DWG	CHK	APP
3	4/13/23	ADDED LIFTING LUGS	DK	RPM	
2	1/24/23	ADDED DIAGRAM, TAPE REVISED INSULATION & REFRACTORY	DWS	CPH	
1	10/31/22	REVISED DETAIL CALLOUT	DWS	CPH	FEL
0	10/11/22	ISSUED FOR FABRICATION	DWS	CPH	FEL

THIS DOCUMENT AND THE INFORMATION IT CONTAINS ARE THE PROPERTY OF BARLOW ENGINEERING, LLC, ARE DISCLOSED IN CONFIDENCE FOR LIMITED USE AND MUST BE SURRENDERED TO BARLOW ENGINEERING, LLC ON DEMAND.

DISCLOSURE, PUBLICATION OR DISTRIBUTION OF THIS DOCUMENT WITHOUT PRIOR WRITTEN AUTHORIZATION FROM BARLOW ENGINEERING, LLC IS STRICTLY PROHIBITED.

COPYRIGHT BARLOW ENGINEERING, LLC AS OF THE DATE DRAWN OR REVISED.

Barlow Engineering Services, LLC.
114 Inverness Drive East
Englewood, CO
E-mail: mgg@barlowprojects.com
Phone: (303) 792-0248
Fax: (303) 799-1338
Web: www.barlowprojects.com

BES PROJECT NO.	6015
DESIGNED BY:	DWS 10/1/22
DRAWN BY:	DWS 10/1/22
CHECKED BY:	CPH 10/11/22
APPROVED BY:	FEL 10/11/22
SCALE:	AS NOTED
	DO NOT SCALE THIS DRAWING. USE DIMENSIONS ONLY.

DRAWING TITLE: COMBUSTOR
COMBUSTOR DUCT
MK-CD-05

PROJECT: HARRISONBURG RESOURCE RECOVERY FACILITY

DRAWING NUMBER: S020

SHEET NUMBER: 6 REV: 3

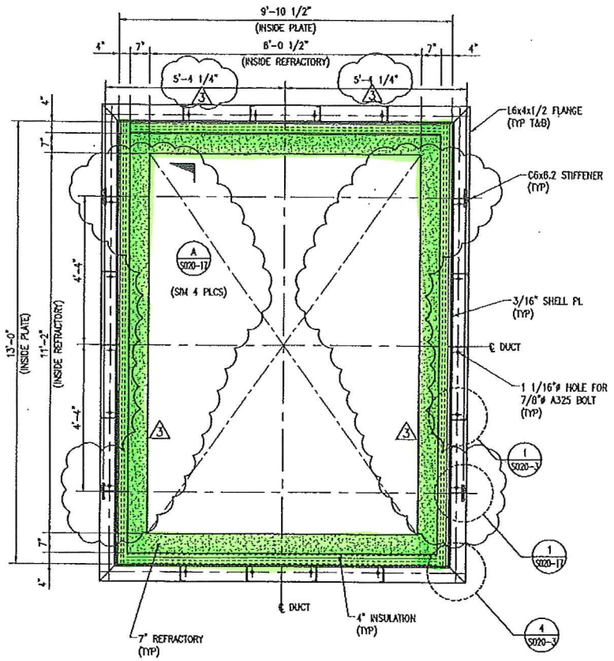

MK-CD-06 PLAN
1/2"=1'-0"

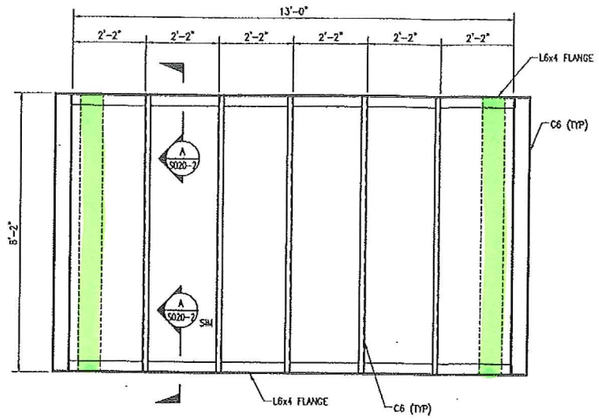

MK-CD-06 EAST & WEST ELEVATIONS
1/2"=1'-0"

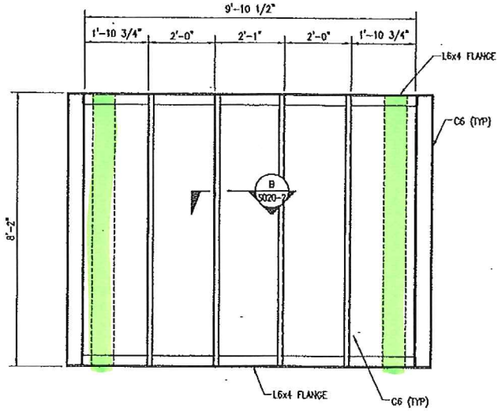

MK-CD-06 NORTH & SOUTH ELEVATIONS
1/2"=1'-0"

NOTES:

1. WORK THIS DRAWING WITH DRAWING S020 SHT-1.
2. FOR ADDITIONAL TECHNICAL REQUIREMENTS SEE COMBUSTOR SPECIFICATION.
3. MAXIMUM WEIGHT OF MK-C-06 WITH INSULATION AND REFRACTORY IS 40,500 POUNDS.
4. FOR LIFTING LUG DETAILS, DRAWING S020-17.

3

– Specific cleaning/demolition/removal requirements (See project documents)

THIS EQUIPMENT AND PROCESS IS PROTECTED UNDER U.S. PATENT NUMBERS 4,955,296 AND 5,044,288. OTHER U.S. AND INTERNATIONAL PATENTS PENDING.

REV	DATE	DESCRIPTION	DWG	CHK	APP
3	9/13/03	ADDED LIFTING LUGS			
2	1/13/03	REVISED INSULATION & REFRACTORY	DWS	CFH	EPW
1	10/24/02	REVISED DETAIL CALLOUT	DWS	CFH	FEL
0	10/8/02	ISSUED FOR FABRICATION	DWS	CFH	FEL

THIS DOCUMENT AND THE INFORMATION IT CONTAINS ARE THE PROPERTY OF BARLOW ENGINEERING, LLC, ARE DISCLOSED IN CONFIDENCE FOR LIMITED USE AND MUST BE SURRENDERED TO BARLOW ENGINEERING, LLC ON DEMAND.

DISCLOSURE, PUBLICATION OR DISTRIBUTION OF THIS DOCUMENT WITHOUT PRIOR WRITTEN AUTHORIZATION FROM BARLOW ENGINEERING, LLC IS STRICTLY PROHIBITED.

COPYRIGHT BARLOW ENGINEERING, LLC AS OF THE DATE DRAWN OR REVISED.

Barlow Engineering Services, LLC.
116 Inverness Drive East
Englewood, CO
E-mail: eng@barlowpojects.com
Phone: (303) 793-0248
Fax: (303) 799-1258
Web: www.barlowpojects.com

BPI PROJECT NO.	6015	
DESIGNED BY:	DWS	9/17/02
DRAWN BY:	DWS	9/17/02
CHECKED BY:	CFH	10/8/02
APPROVED BY:	FEL	10/8/02
SCALE:	AS NOTED	

DO NOT SCALE THIS DRAWING. USE DIMENSIONS ONLY.

DRAWING TITLE: COMBUSTOR
COMBUSTOR DUCT
MK-CD-06

DRAWING NUMBER: S020

PROJECT: HARRISONBURG RESOURCE RECOVERY FACILITY

SHEET NUMBER: 7 REV: 3

PROPRIETARY & CONFIDENTIAL

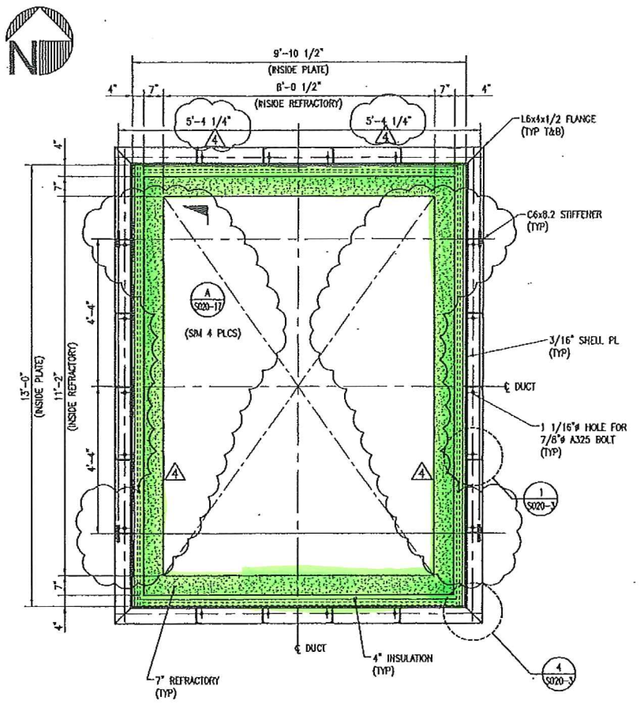

MK-CD-07 PLAN
1/2"=1'-0"

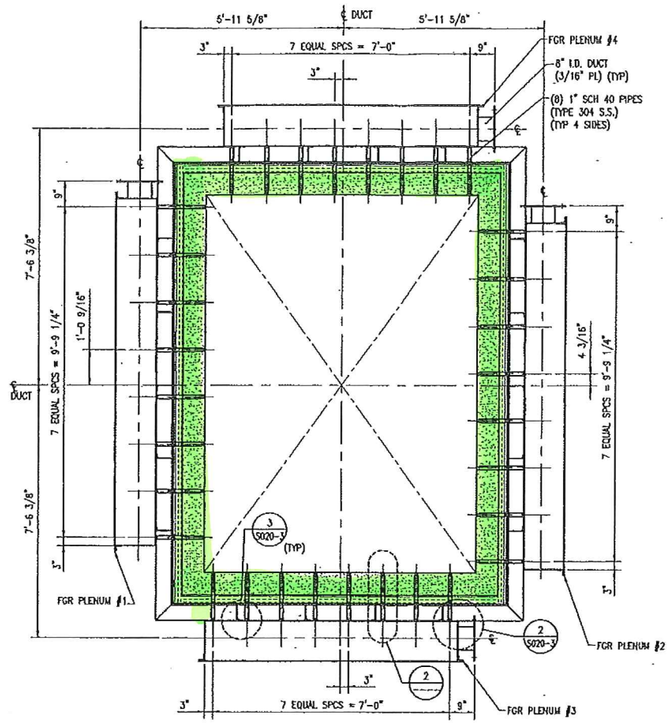

PLAN – OFA PLENUMS
1/2"=1'-0"

NOTES:

1. WORK THIS DRAWING WITH DRAWING S020 SHT-1.
2. FOR ADDITIONAL TECHNICAL REQUIREMENTS SEE COMBUSTOR SPECIFICATION.
3. MAXIMUM WEIGHT OF MK-CD-07 WITH INSULATION AND REFRACTORY IS 42,000 POUNDS.
4. FOR LIFTING LUG DETAILS, SEE DRAWING S2020 SHT-17.

— Specific cleaning/demolition removal requirements (See project documents)

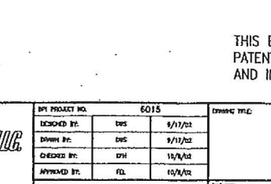

DETAIL
1 1/2" = 1'-0"

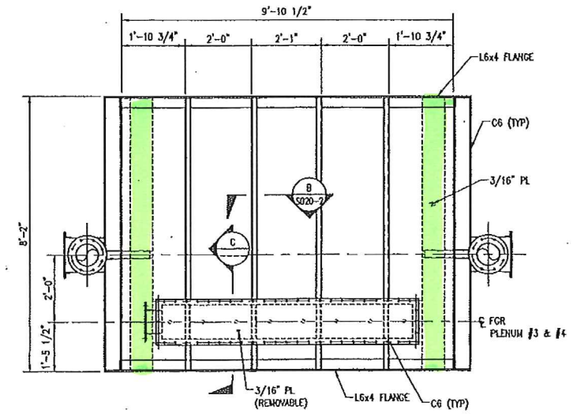

MK-CD-07 NORTH ELEVATION
1/2"=1'-0" (SOUTH ELEVATION SIMILAR)

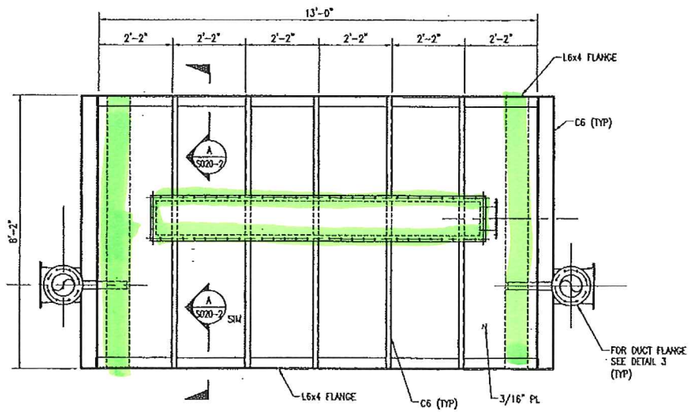

MK-CD-07 EAST ELEVATION
1/2"=1'-0" (WEST ELEVATION SIMILAR)

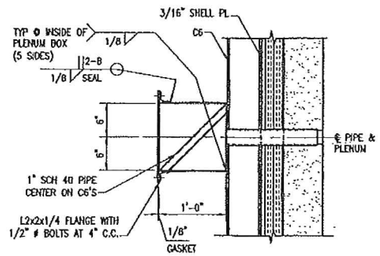

SECTION
1" = 1'-0"

THIS EQUIPMENT AND PROCESS IS PROTECTED UNDER U.S. PATENT NUMBERS 4,955,296 AND 5,044,288. OTHER U.S. AND INTERNATIONAL PATENTS PENDING.

PROPRIETARY & CONFIDENTIAL

REV	DATE	DESCRIPTION	DWG	CHK	APP
4	9[23]/03	ADDED LIFTING LUGS			
3	1/13/03	REVISED INSULATION & REFRACTORY	DWS	DTH	DTH
2	10/21/02	REVISED DETAIL CALLOUT	DWS	DTH	FJL
1	10/11/02	REMOVED HOLES ON PLENUM BOXES, REVISED DUCT SIZES, ADDED S.S. MFG. TYPE	DWS	DTH	FJL
0	10/9/02	ISSUED FOR FABRICATION	DWS	DTH	FJL

THIS DOCUMENT AND THE INFORMATION IT CONTAINS ARE THE PROPERTY OF BARLOW ENGINEERING, LLC. ARE DISCLOSED IN CONFIDENCE FOR LIMITED USE AND MUST BE SURRENDERED TO BARLOW ENGINEERING, LLC ON DEMAND.

DISCLOSING, PUBLICATION OR DISTRIBUTION OF THIS DOCUMENT WITHOUT PRIOR WRITTEN AUTHORIZATION FROM BARLOW ENGINEERING, LLC IS STRICTLY PROHIBITED.

COPYRIGHT BARLOW ENGINEERING, LLC AS OF THE DATE DRAWN OR REVISED.

Barlow Engineering Services, LLC.
114 Inverness Drive East
Englewood, CO
E-mail: engr@barlowprojects.com
Phone: (303) 792-0343
Fax: (303) 799-1338
Web: www.barlowprojects.com

BPI PROJECT NO.	6015
DESIGNED BY:	DWS 9/17/02
DRAWN BY:	DWS 9/17/02
CHECKED BY:	DTH 10/8/02
APPROVED BY:	FJL 10/8/02
SCALE:	AS NOTED
	DO NOT SCALE THIS DRAWING. USE DIMENSIONS ONLY.

DRAWING TITLE:
COMBUSTOR
COMBUSTOR DUCT
MK-CD-07

DRAWING NUMBER: S020

PROJECT: HARRISONBURG RESOURCE RECOVERY FACILITY

SHEET NUMBER: 8 REV: 4

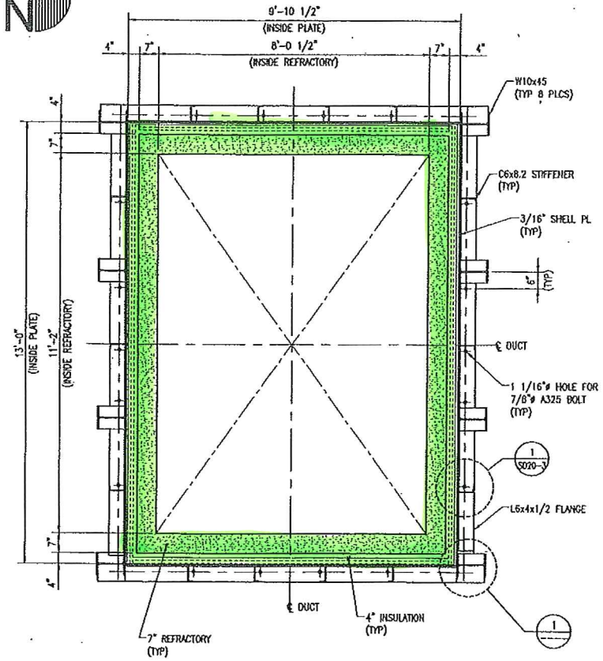

MK-CD-08 PLAN
1/2"=1'-0" (LOWER FLANGE)

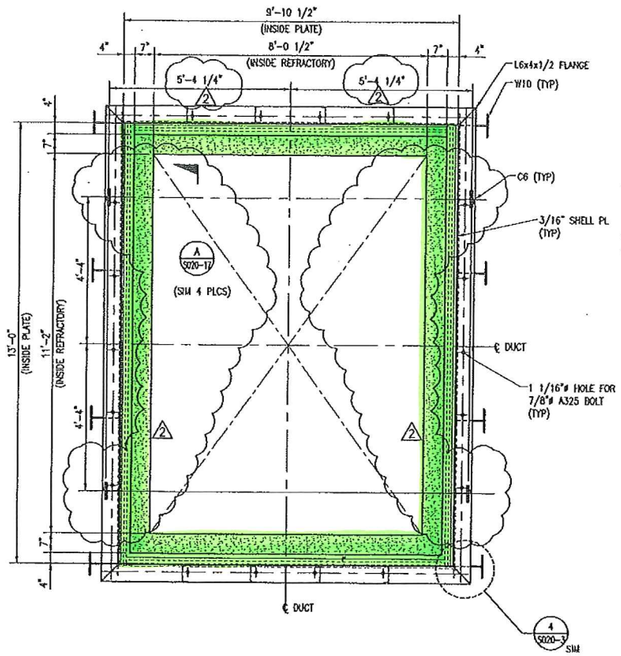

MK-CD-08 PLAN
1/2"=1'-0" (UPPER FLANGE)

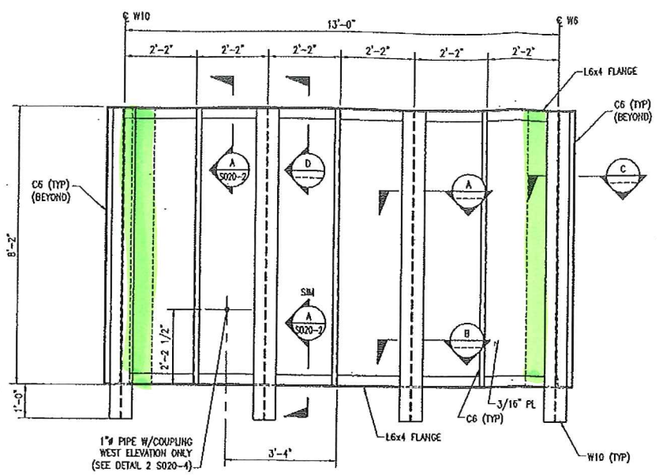

MK-CD-08 EAST & WEST ELEVATION
1/2"=1'-0"

NOTES:

1. WORK THIS DRAWING WITH DRAWING S020 SHT-1.
2. FOR ADDITIONAL TECHNICAL REQUIREMENTS SEE COMBUSTOR SPECIFICATION.
3. ALL COMBUSTOR SHELL PLATES TO BE 3/16" A36 UNLESS OTHERWISE NOTED.
4. ALL SHELL PLATE JOINTS SHALL BE MADE WITH FULL PENETRATION WELDS.
5. MAXIMUM WEIGHT OF MK-CD-08 WITH INSULATION AND REFRACTORY IS 43,300 POUNDS.
6. FOR LIFTING LUG DETAILS, SEE DRAWING S020 SHT-17.
   △2

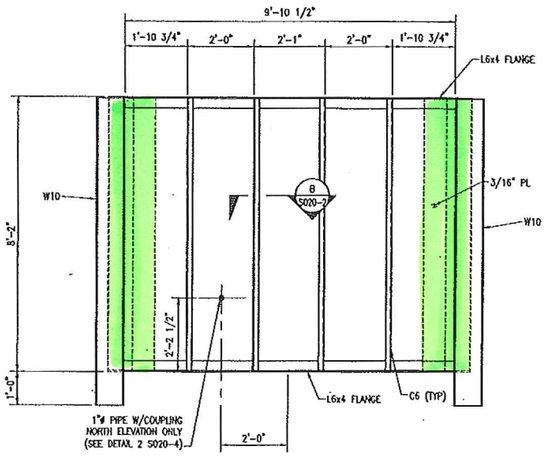

MK-CD-08 NORTH & SOUTH ELEVATION
1/2"=1'-0"

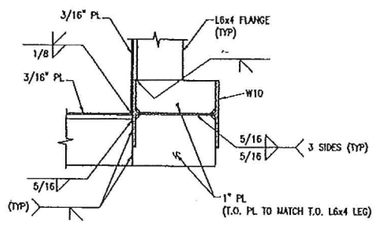

DETAIL 1
1 1/2" = 1'-0"

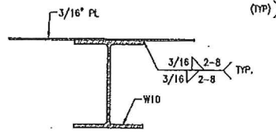

SECTION A
1 1/2" = 1'-0"

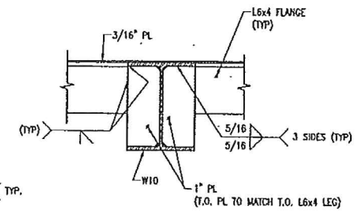

SECTION B
1 1/2" = 1'-0"

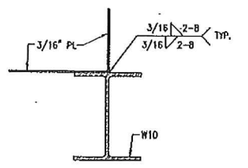

SECTION C
1 1/2" = 1'-0"

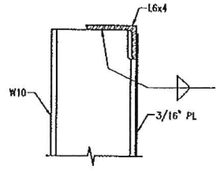

SECTION D
1 1/2" = 1'-0"

[redacted] — Specific cleaning/demolition/removal requirements (See project documents)

PROPRIETARY & CONFIDENTIAL

THIS EQUIPMENT AND PROCESS IS PROTECTED UNDER U.S. PATENT NUMBERS 4,955,296 AND 5,044,288. OTHER U.S. AND INTERNATIONAL PATENTS PENDING.

REV	DATE	DESCRIPTION	DRWN	CHK	APP
2	9/13/02	ADDED LIFTING LUGS	DMS	CFH	DPW
1	1/23/02	ADDED THERMAL EXP'S REVISED INSULATION & REFRACTORY	DMS	CFH	DPW
0	12/2/02	ISSUED FOR FABRICATION	DMS	CFH	FEL

THIS DOCUMENT AND THE INFORMATION IT CONTAINS ARE THE PROPERTY OF BARLOW ENGINEERING, LLC. ARE DISCLOSED IN CONFIDENCE FOR LIMITED USE AND MUST BE SURRENDERED TO BARLOW ENGINEERING, LLC ON DEMAND.

DISCLOSURE, PUBLICATION OR DISTRIBUTION OF THIS DOCUMENT WITHOUT PRIOR WRITTEN AUTHORIZATION FROM BARLOW ENGINEERING, LLC IS STRICTLY PROHIBITED.

COPYRIGHT BARLOW ENGINEERING, LLC AS OF THE DATE DRAWN OR REVISED.

Barlow Engineering Services, LLC.
116 Inverness Drive East
Englewood, CO
Email: engr@barlowprojects.com
Phone: (303) 792-0348
Fax: (303) 799-1238
Web: www.barlowprojects.com

BES PROJECT NO:	8015	
DESIGNED BY:	DMS	11/1/02
DRAWN BY:	LMT	11/01/02
CHECKED BY:	CFH	11/20/02
APPROVED BY:	FEL	11/20/02
SCALE:	AS NOTED	
	DO NOT SCALE THIS DRAWING. USE DIMENSIONS ONLY.	

DRAWING TITLE:
COMBUSTOR
COMBUSTOR DUCT
MK-CD-08

PROJECT:
HARRISONBURG RESOURCE RECOVERY FACILITY

DRAWING NUMBER: S020
SHEET NUMBER: 9
REV: 2

— Specific cleaning/demolition removal requirements (See project documents)

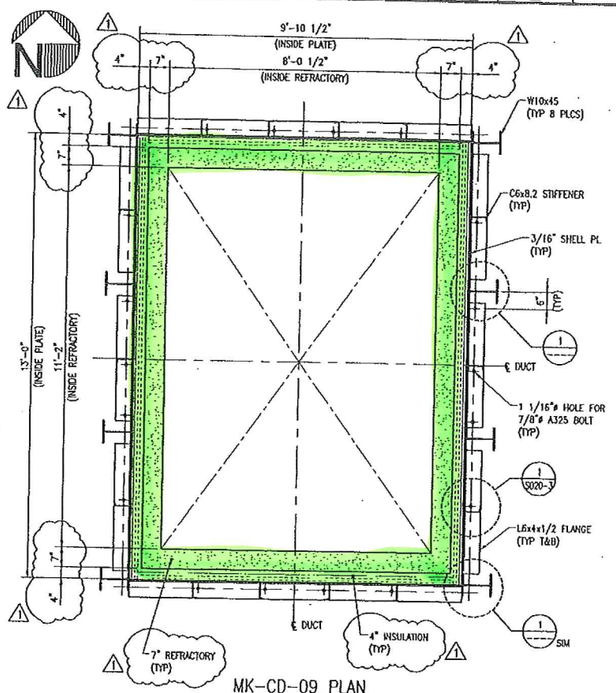

MK-CD-09 PLAN
1/2"=1'-0" (UPPER FLANGE)

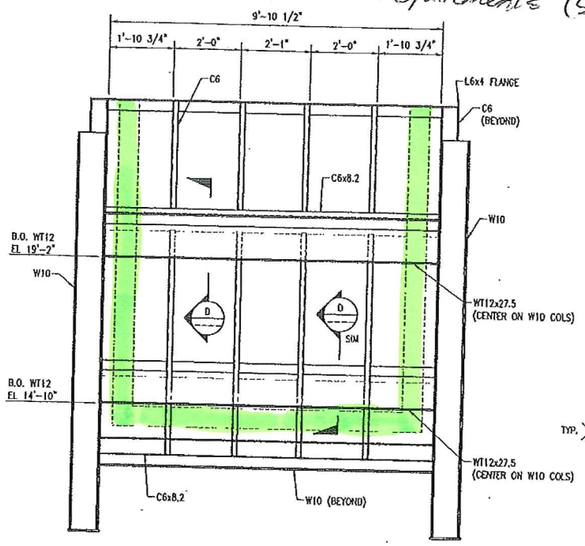

MK-CD-09 SOUTH ELEVATION
1/2"=1'-0"

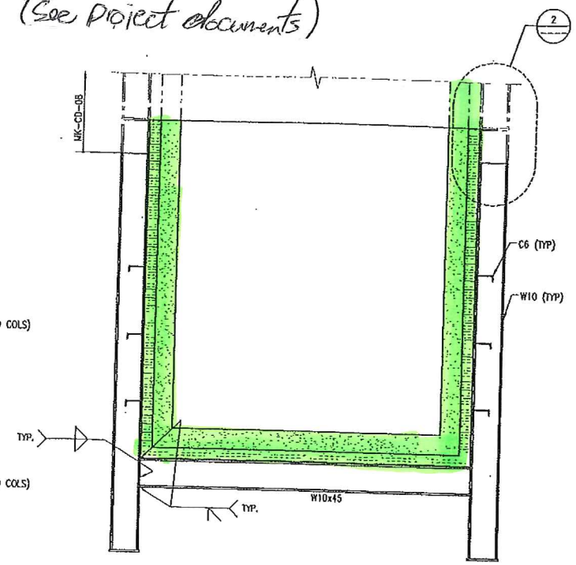

NOTES:

1. WORK THIS DRAWING WITH DRAWING S020 SHT-1.
2. FOR ADDITIONAL TECHNICAL REQUIREMENTS SEE COMBUSTOR SPECIFICATION.
3. ALL SHELL PLATE JOINTS SHALL BE MADE WITH FULL PENETRATION WELDS.
4. MAXIMUM WEIGHT OF MK-CD-09 WITH INSULATION AND REFRACTORY IS 46,000 POUNDS.

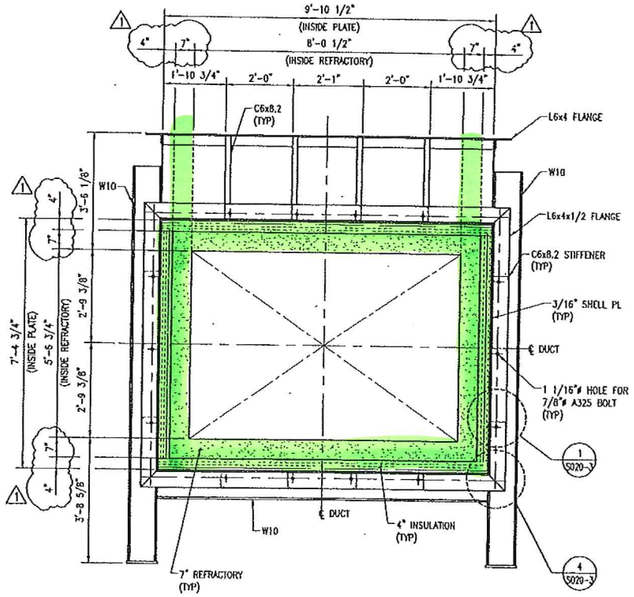

MK-CD-09 NORTH ELEVATION
1/2"=1'-0"

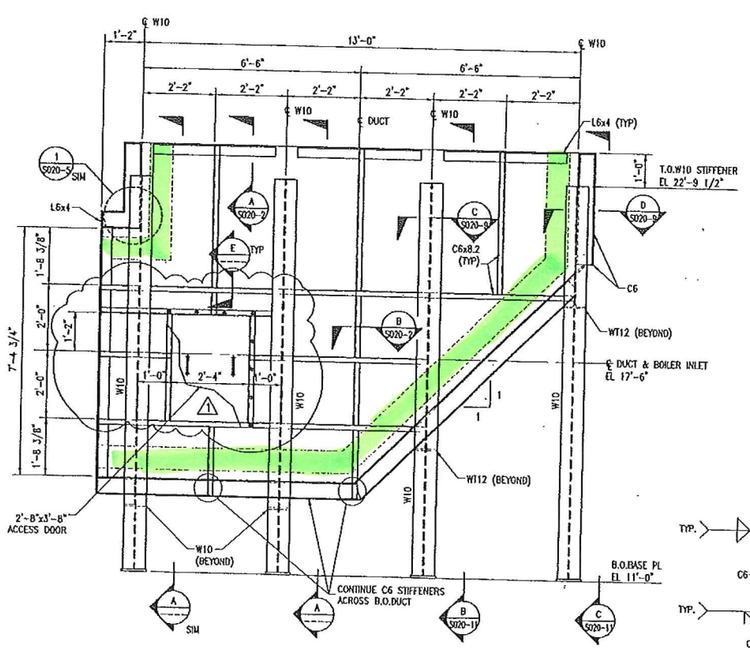

MK-CD-09 WEST ELEVATION
1/2"=1'-0"
(EAST ELEVATION SIMILAR)

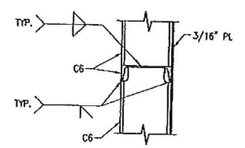

SECTION
1/2" = 1'-0"
E

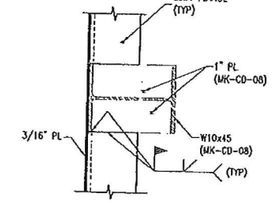

DETAIL
1 1/2" = 1'-0"
1

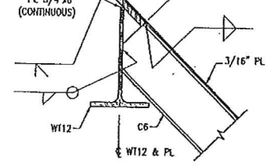

SECTION
1 1/2"=1'-0"
D

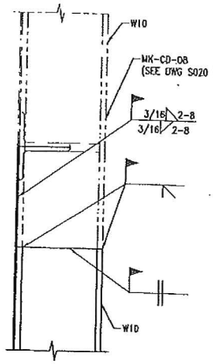

DETAIL
1 1/2"=1'-0"
2

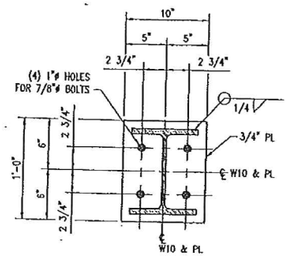

TYPICAL BASE PLATE
1 1/2"=1'-0"

THIS EQUIPMENT AND PROCESS IS PROTECTED UNDER U.S. PATENT NUMBERS 4,955,296 AND 5,044,288. OTHER U.S. AND INTERNATIONAL PATENTS PENDING.

PROPRIETARY & CONFIDENTIAL

REV	DATE	DESCRIPTION	DWG	CHK	APP
1	11/15/02	REVISED INSULATION & REFRACTORY ADDED ACCESS DOOR	DWG	CHK	APP
0	11/1/02	ISSUED FOR FABRICATION	DWG	CHK	APP

THIS DOCUMENT AND THE INFORMATION IT CONTAINS ARE THE PROPERTY OF BARLOW ENGINEERING, LLC, ARE DISCLOSED IN CONFIDENCE FOR LIMITED USE, AND MUST BE SURRENDERED TO BARLOW ENGINEERING, LLC ON DEMAND.

DISCLOSURE, PUBLICATION OR DISTRIBUTION OF THIS DOCUMENT WITHOUT PRIOR WRITTEN AUTHORIZATION FROM BARLOW ENGINEERING, LLC IS STRICTLY PROHIBITED.

COPYRIGHT BARLOW ENGINEERING, LLC AS OF THE DATE DRAWN OR REVISED.

Barlow Engineering Services, LLC.
116 Inverness Drive East
Englewood, CO
E-mail: engr@barlowprojects.com
Phone: (303) 799-0948
Fax: (303) 799-1234
Web: www.barlowprojects.com

BPI PROJECT NO:	6015	
DESIGNED BY:	DWS	11/1/02
DRAWN BY:	DWS	11/1/02
CHECKED BY:	CPH	11/14/02
APPROVED BY:	FEL	11/18/02
SCALE:	AS NOTED	
	DO NOT SCALE THIS DRAWING, USE DIMENSIONS ONLY.	

DRAWING TITLE:
COMBUSTOR
COMBUSTOR DUCT
MK-CD-09

PROJECT:
HARRISONBURG RESOURCE RECOVERY FACILITY

DRAWING NUMBER:
S020

SHEET NUMBER: 10
REV: 1

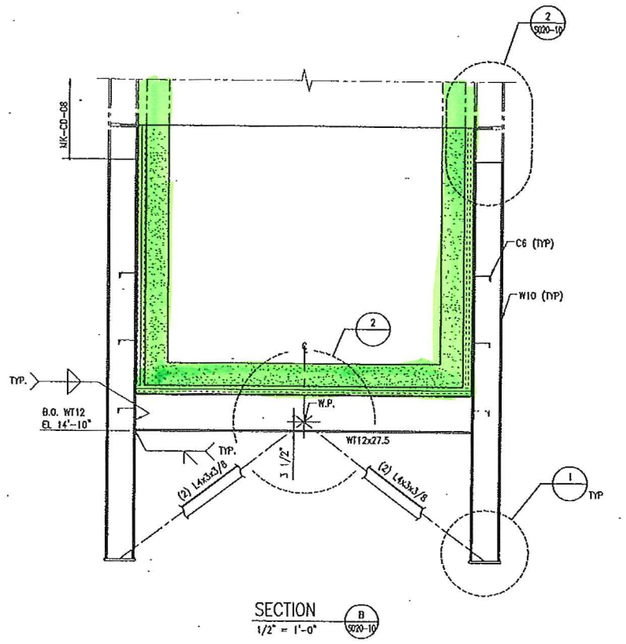

SECTION B S020-10
1/2" = 1'-0"

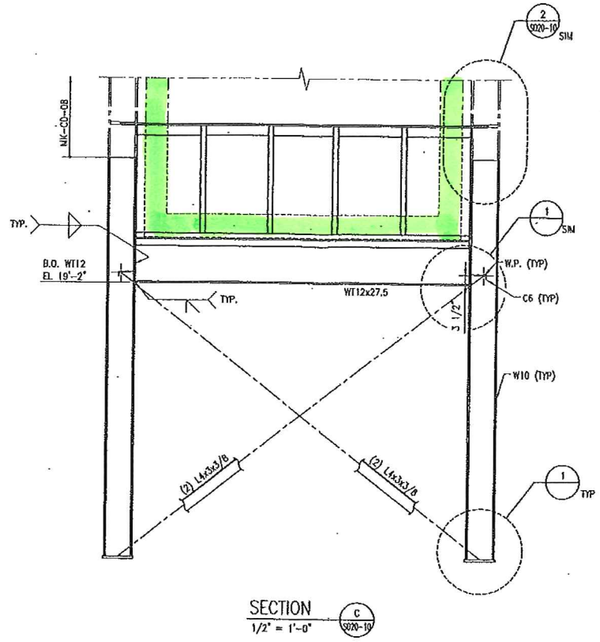

SECTION C S020-10
1/2" = 1'-0"

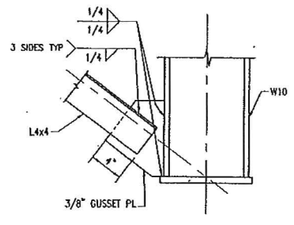

DETAIL 1
1 1/2" = 1'-0"

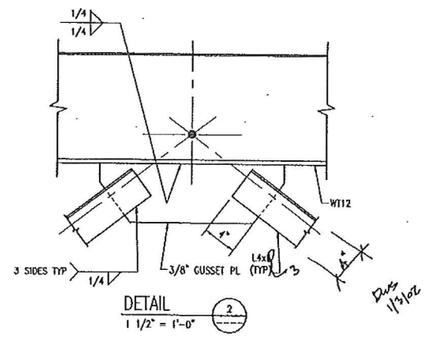

DETAIL 2
1 1/2" = 1'-0"

NOTES:

1. WORK THIS DRAWING WITH DRAWING S020 SHT-10.
2. FOR ADDITIONAL TECHNICAL REQUIREMENTS SEE COMBUSTOR SPECIFICATION.

— Specific cleaning/demolition/removal requirements (See project documents)

THIS EQUIPMENT AND PROCESS IS PROTECTED UNDER U.S. PATENT NUMBERS 4,955,296 AND 5,044,288. OTHER U.S. AND INTERNATIONAL PATENTS PENDING.

PROPRIETARY & CONFIDENTIAL

REV	DATE	DESCRIPTION	DWG	CHK	APP
0	12/2/02	ISSUED FOR FABRICATION			

THIS DOCUMENT AND THE INFORMATION IT CONTAINS ARE THE PROPERTY OF BARLOW ENGINEERING, LLC, ARE DISCLOSED IN CONFIDENCE FOR LIMITED USE AND MUST BE SURRENDERED TO BARLOW ENGINEERING, LLC ON DEMAND.

DISCLOSURE, PUBLICATION OR DISTRIBUTION OF THIS DOCUMENT WITHOUT PRIOR WRITTEN AUTHORIZATION FROM BARLOW ENGINEERING, LLC IS STRICTLY PROHIBITED.

COPYRIGHT BARLOW ENGINEERING, LLC AS OF THE DATE DRAWN OR REVISED.

Barlow Engineering Services, LLC.
116 Inverness Drive East
Englewood, CO
E-mail: eng@barlowprojects.com
Phone: (303) 792-0249
Fax: (303) 799-1231
Web: www.barlowprojects.com

BPI PROJECT NO.	6015	
DESIGNED BY:	DMS	11/8/02
DRAWN BY:	DMS	11/8/02
CHECKED BY:	GTH	11/18/02
APPROVED BY:	FTL	11/19/02
SCALE:	AS NOTED	

DO NOT SCALE THIS DRAWING. USE DIMENSIONS ONLY.

DRAWING TITLE: COMBUSTOR
COMBUSTOR DUCT
MK-CD-09

DRAWING NUMBER: S020

PROJECT: HARRISONBURG RESOURCE RECOVERY FACILITY

SHEET NUMBER: 11 REV: 0

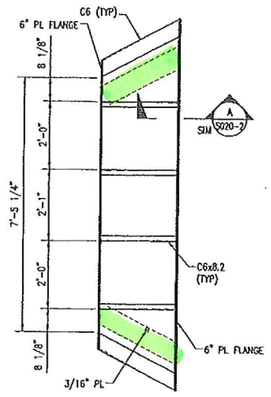

MK-CD-10 ROOF PLAN
1/2"=1'-0"

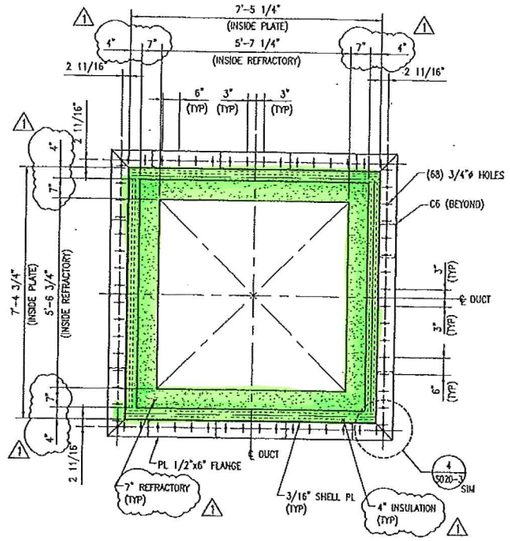

MK-CD-10 NORTH ELEVATION
1/2"=1'-0"

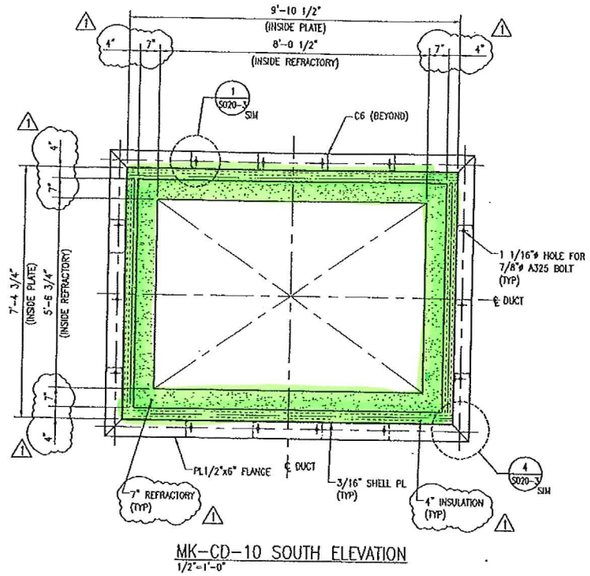

MK-CD-10 SOUTH ELEVATION
1/2"=1'-0"

NOTES:

1. WORK THIS DRAWING WITH DRAWING S020 SHT-1.
2. FOR ADDITIONAL TECHNICAL REQUIREMENTS SEE COMBUSTOR SPECIFICATION.
3. MAXIMUM WEIGHT OF MK-CD-10 WITH INSULATION AND REFRACTORY IS 10,000 POUNDS.

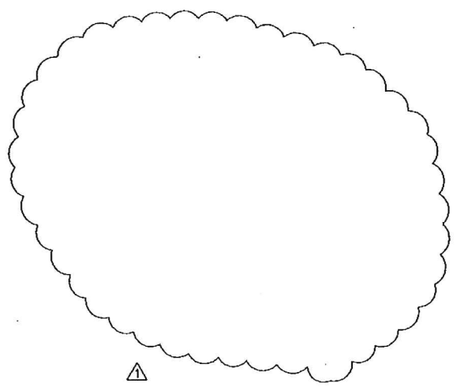

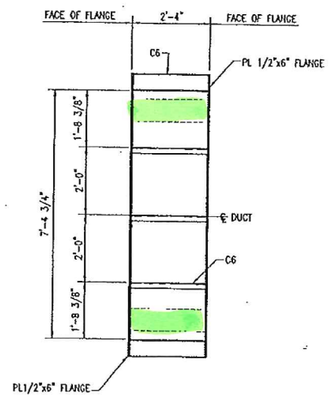

MK-CD-10 EAST & WEST ELEVATION
1/2"=1'-0"

Specific cleaning/demolition/removal requirements (See project documents)

THIS EQUIPMENT AND PROCESS IS PROTECTED UNDER U.S. PATENT NUMBERS 4,955,296 AND 5,044,288. OTHER U.S. AND INTERNATIONAL PATENTS PENDING.

PROPRIETARY & CONFIDENTIAL

REV	DATE	DESCRIPTION	DWG	CHK	APP
1	11/19/12	REVISED INSULATION & REFRACTORY ROUNDED ELEVATION	DWS	EPH	DWS
0	12/13/12	ISSUED FOR FABRICATION	DWS	EPH	DWS

THIS DOCUMENT AND THE INFORMATION IT CONTAINS ARE THE PROPERTY OF BARLOW ENGINEERING, LLC. ARE DISCLOSED IN CONFIDENCE FOR LIMITED USE AND MUST BE SURRENDERED TO BARLOW ENGINEERING, LLC ON DEMAND.

DISCLOSURE, PUBLICATION OR DISTRIBUTION OF THIS DOCUMENT WITHOUT PRIOR WRITTEN AUTHORIZATION FROM BARLOW ENGINEERING, LLC IS STRICTLY PROHIBITED.

COPYRIGHT BARLOW ENGINEERING, LLC AS OF THE DATE DRAWN OR REVISED.

Barlow Engineering Services, LLC
116 Inverness Drive East
Englewood, CO
E-mail: eng@barlowprojects.com
Phone: (303) 792-0244
Fax: (303) 799-1338
Web: www.barlowprojects.com

BES PROJECT NO:	6015
DESIGNED BY:	DWS 12/3/12
DRAWN BY:	DWS 12/3/12
CHECKED BY:	EPH 12/3/12
APPROVED BY:	ED. 12/3/12
SCALE:	AS NOTED
	DO NOT SCALE THIS DRAWING. USE DIMENSIONS ONLY.

DRAWING TITLE: COMBUSTOR
COMBUSTOR DUCT
MK-CD-10

DRAWING NUMBER: S020

PROJECT: HARRISONBURG RESOURCE RECOVERY FACILITY

SHEET NUMBER: 12 REV: 1

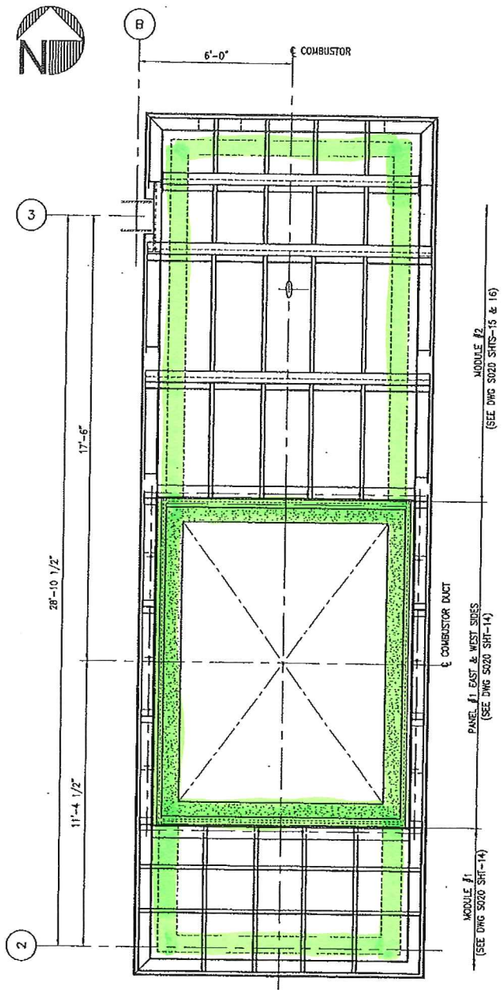

PLAN - COMBUSTION UNIT
3/8"=1'-0"
(UNIT 1 SHOWN)
(UNIT 2 OPP HAND)

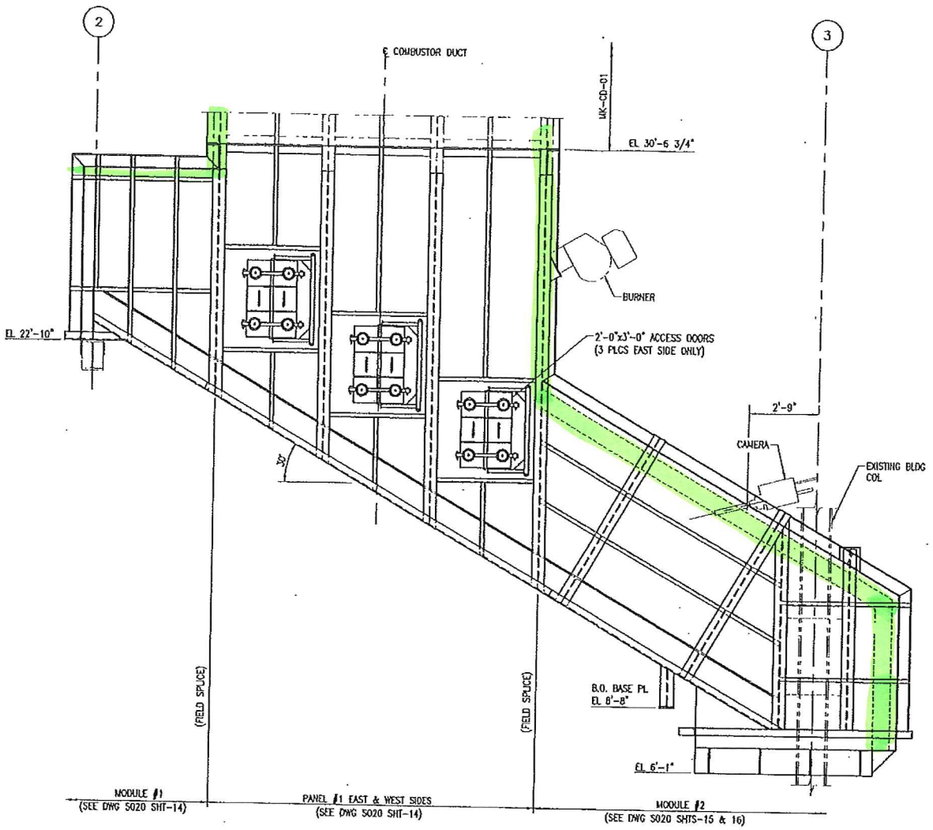

EAST ELEVATION
3/8"=1'-0"

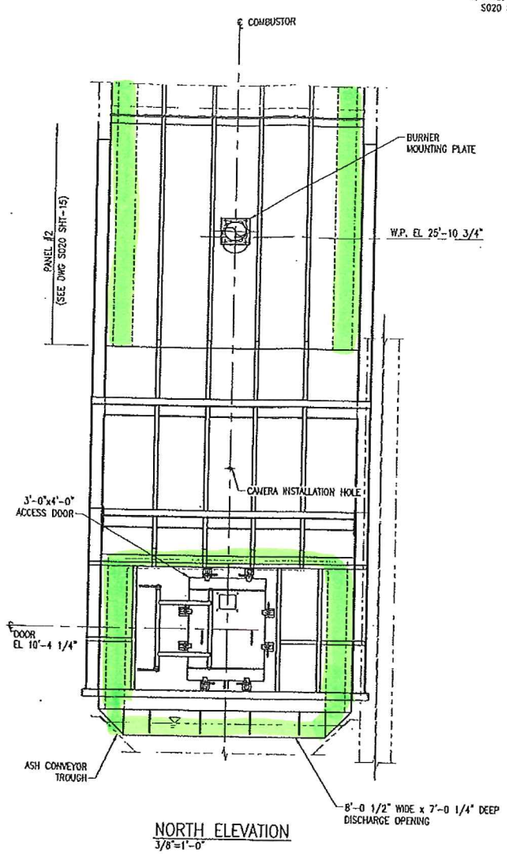

NORTH ELEVATION
3/8"=1'-0"

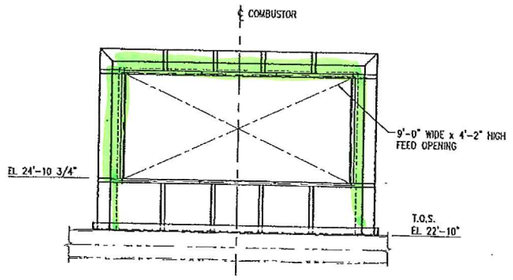

SOUTH ELEVATION
3/8"=1'-0"

NOTES:

1. WORK THIS DRAWING WITH DRAWINGS S020 SHT-1 AND S020 SHTS-14 THROUGH 16.

[green] - Specific cleaning/demolition/removal requirements (See project documents)

PROPRIETARY & CONFIDENTIAL

THIS EQUIPMENT AND PROCESS IS PROTECTED UNDER U.S. PATENT NUMBERS 4,955,296 AND 5,044,288. OTHER U.S. AND INTERNATIONAL PATENTS PENDING.

REV	DATE	DESCRIPTION	DWG	CHK	APP
0	1/15/03	ISSUED FOR FABRICATION			

THIS DOCUMENT AND THE INFORMATION IT CONTAINS ARE THE PROPERTY OF BARLOW ENGINEERING, LLC. ARE DISCLOSED IN CONFIDENCE FOR LIMITED USE AND MUST BE SURRENDERED TO BARLOW ENGINEERING, LLC ON DEMAND.

DISCLOSURE, PUBLICATION OR DISTRIBUTION OF THIS DOCUMENT WITHOUT PRIOR WRITTEN AUTHORIZATION FROM BARLOW ENGINEERING, LLC IS STRICTLY PROHIBITED.

COPYRIGHT BARLOW ENGINEERING, LLC AS OF THE DATE DRAWN OR REVISED.

Barlow Engineering Services, LLC.
116 Inverness Drive East
Englewood, CO
E-mail: mg@barlowprojects.com
Phone: (303) 792-0248
Fax: (303) 799-1216
Web: www.barlowprojects.com

BPI PROJECT NO.	6015	
DESIGNED BY:	DVS	1/7/03
DRAWN BY:	DVS	1/7/03
CHECKED BY:	CPH	1/8/03
APPROVED BY:	FEL	1/8/03
SCALE:	AS NOTED	
	DO NOT SCALE THIS DRAWING. USE DIMENSIONS ONLY.	

DRAWING TITLE:
COMBUSTOR
COMBUSTION UNIT 2
PLAN & ELEVATIONS

DRAWING NUMBER:
S020

PROJECT:
HARRISONBURG RESOURCE RECOVERY FACILITY

SHEET NUMBER: 13
REV: 0

— To be removed

— Specific cleaning/demolition/removal requirements (See project documents)

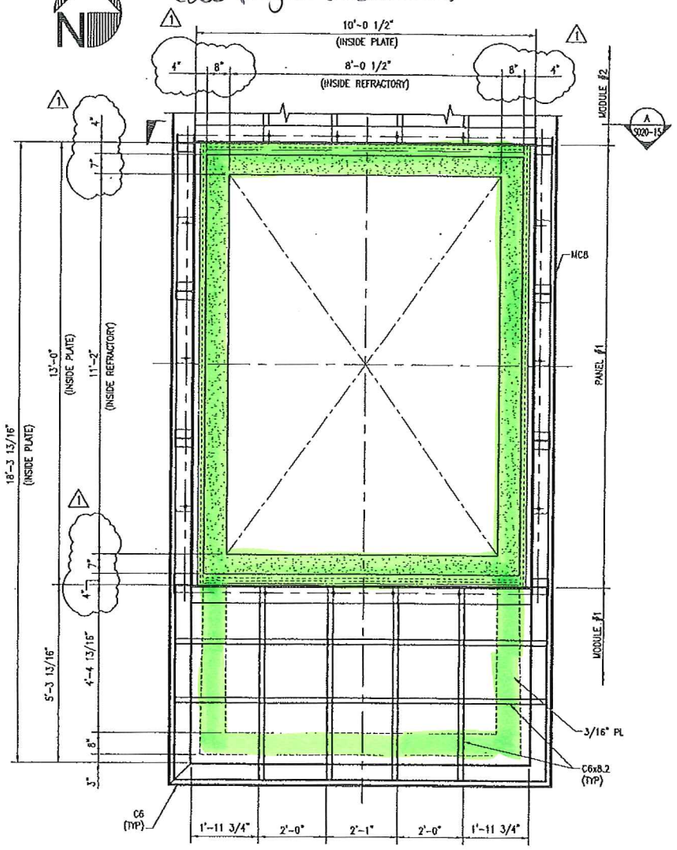

COMBUSTOR PLAN
1/2"=1'-0"

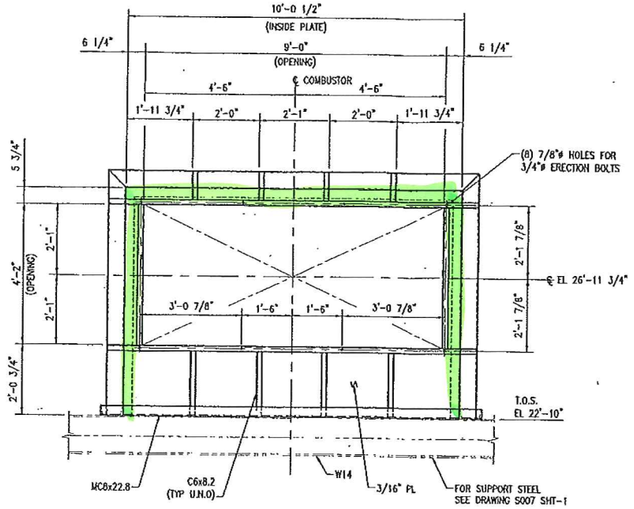

MODULE #1 SOUTH ELEVATION
1/2"=1'-0"

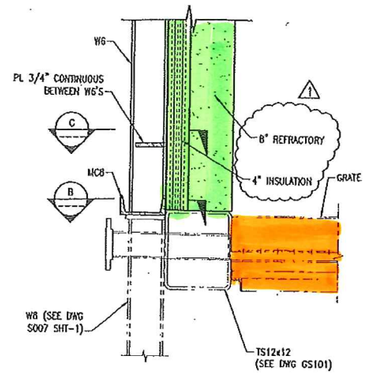

SECTION A
1" = 1'-0"

NOTES:

1. WORK THIS DRAWING WITH DRAWINGS S020 SHT-1 AND S020 SHT-13.
2. FOR ADDITIONAL TECHNICAL REQUIREMENTS SEE COMBUSTOR SPECIFICATION.
3. ALL COMBUSTOR SHELL PLATES TO BE 3/16" A36 UNLESS OTHERWISE NOTED.
4. ALL SHELL PLATE JOINTS SHALL BE MADE WITH FULL PENETRATION WELDS.

REFERENCE DRAWINGS:

BARLOW ENGINEERING SERVICES

S007-SHT 1 COMBUSTOR SUPPORT FRAME

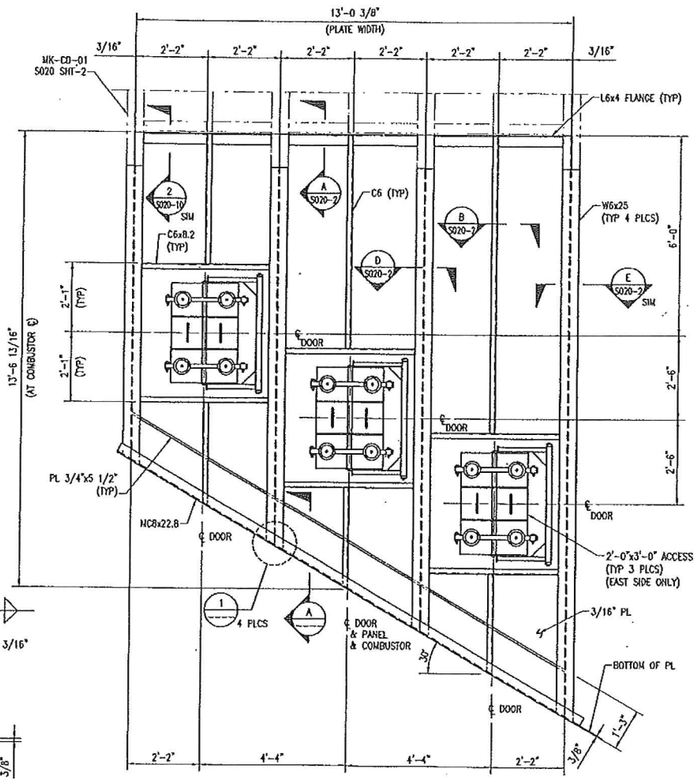

PANEL #1 EAST ELEVATION
1/2"=1'-0" (WEST ELEVATION OPP HAND)

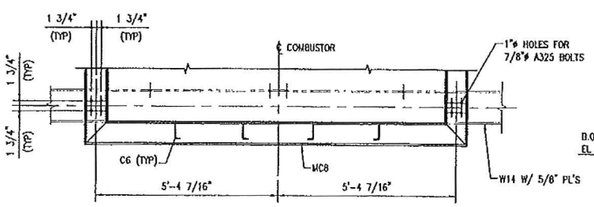

PLAN – BASE CHANNEL
1/2"=1'-0" (B.O.C.B EL 22'-10")

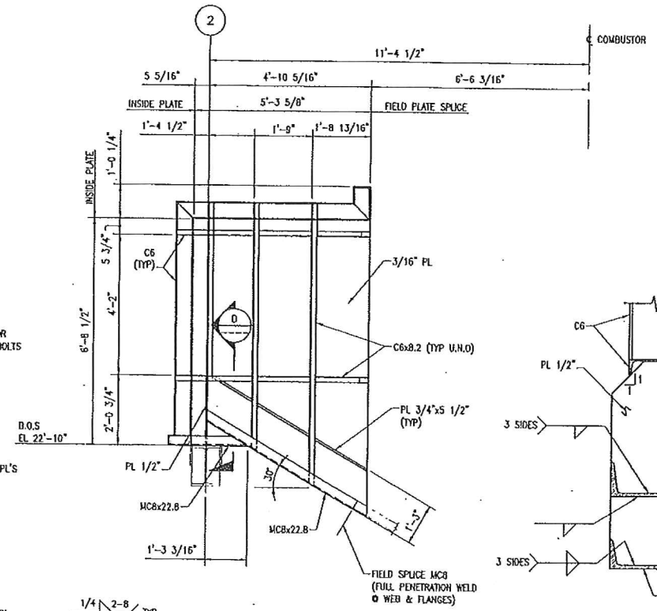

MODULE #1 EAST ELEVATION
1/2"=1'-0" (WEST ELEVATION OPP HAND)

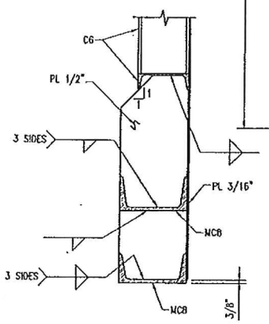

SECTION D
1 1/2" = 1'-0"

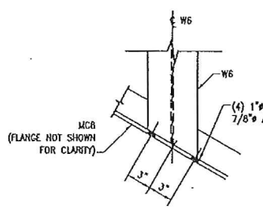

DETAIL 1
1 1/2" = 1'-0"

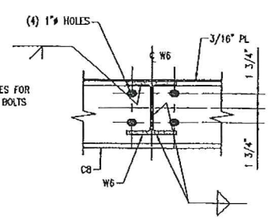

SECTION B
1 1/2" = 1'-0"

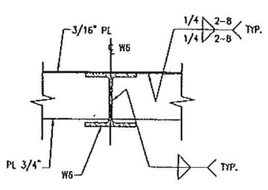

SECTION C
1 1/2" = 1'-0"

THIS EQUIPMENT AND PROCESS IS PROTECTED UNDER U.S. PATENT NUMBERS 4,955,296 AND 5,044,288. OTHER U.S. AND INTERNATIONAL PATENTS PENDING.

PROPRIETARY & CONFIDENTIAL

REV	DATE	DESCRIPTION	ORG	CHK	APP
1	11/15/02	REVISED INSULATION & REFRACTORY	DWS	GTH	DWS
0	11/13/02	ISSUED FOR FABRICATION	DWS	GTH	DWS

THIS DOCUMENT AND THE INFORMATION IT CONTAINS ARE THE PROPERTY OF BARLOW ENGINEERING, LLC, ARE DISCLOSED IN CONFIDENCE FOR LIMITED USE AND MUST BE SURRENDERED TO BARLOW ENGINEERING, LLC ON DEMAND.

DISCLOSURE, PUBLICATION OR DISTRIBUTION OF THIS DOCUMENT WITHOUT PRIOR WRITTEN AUTHORIZATION FROM BARLOW ENGINEERING, LLC IS STRICTLY PROHIBITED.

COPYRIGHT BARLOW ENGINEERING, LLC AS OF THE DATE DRAWN OR REVISED.

Barlow Engineering Services, LLC
116 Inverness Drive East
Englewood, CO
E-mail: mail@barlowprojects.com
Phone: (303) 799-0344
Fax: (303) 799-1338
Web: www.barlowprojects.com

BES PROJECT NO:	6015
DESIGNED BY:	DWS 12/9/02
DRAWN BY:	DWS 12/9/02
CHECKED BY:	GTH 12/13/02
APPROVED BY:	FIL 12/13/02
SCALE:	AS NOTED
	DO NOT SCALE THIS DRAWING. USE DIMENSIONS ONLY.

DRAWING TITLE: COMBUSTOR COMBUSTION UNIT 2 PLANS, SECTIONS & DETAILS

DRAWING NUMBER: S020

PROJECT: HARRISONBURG RESOURCE RECOVERY FACILITY

SHEET NUMBER: 14 REV: 1

- Specific cleanup/demolition/removal requirements (See project documents)

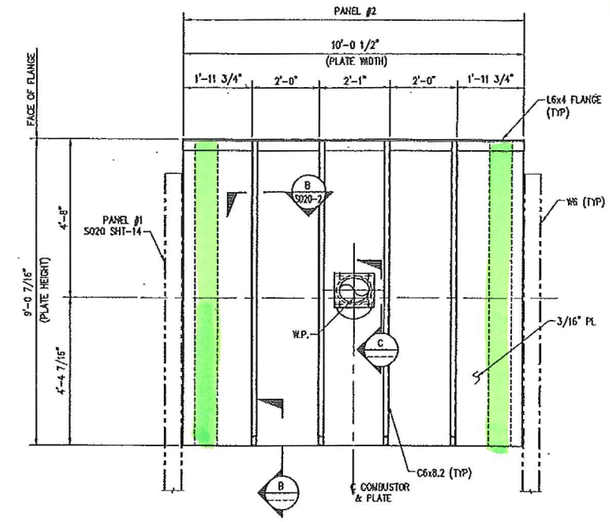

SECTION B
1 1/2" = 1'-0"

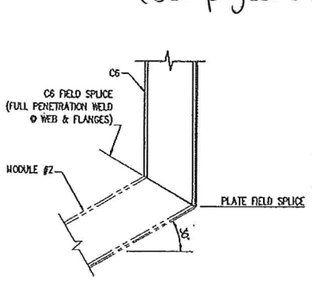

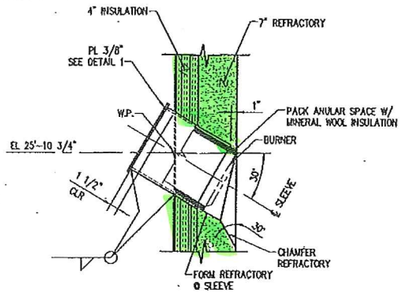

SECTION C
1" = 1'-0"

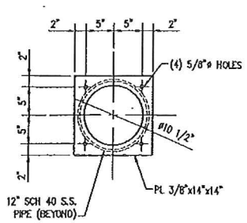

DETAIL 1
1" = 1'-0"

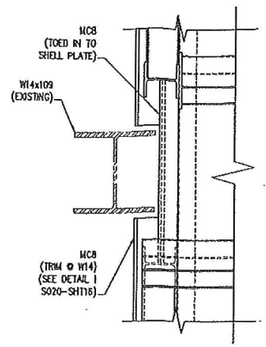

DETAIL 2
1" = 1'-0"

NOTES:

1. WORK THIS DRAWING WITH DRAWINGS S020 SHT-1 AND S020 SHT-13
2. FOR ADDITIONAL TECHNICAL REQUIREMENTS SEE COMBUSTOR SPECIFICATION.
3. ALL COMBUSTOR SHELL PLATES TO BE 3/16" A36 UNLESS OTHERWISE NOTED.
4. ALL SHELL PLATE JOINTS SHALL BE MADE WITH FULL PENETRATION WELDS.
5. CAMERA WALL BOX ASSEMBLY TO BE FIELD INSTALLED, PROVIDE 1/4" FILLET WELD ALL AROUND AT WALL BOX/SHELL PLATE INTERFACE.
6. FOR LIFTING LUG DETAILS, SEE DRAWINGS S020-17.
7. ADJUST LIFTING SLING LENGTHS AT NORTH LUGS AND SOUTH LUGS BASED ON 30 DEGREE ANGLE AND DIMENSIONS SHOWN. SEE DRAWING S050-1.

REFERENCE DRAWINGS:

BARLOW ENGINEERING SERVICES

S007-SHT 1 COMBUSTOR SUPPORT FRAME

SECTION A
1/2" = 1'-0"

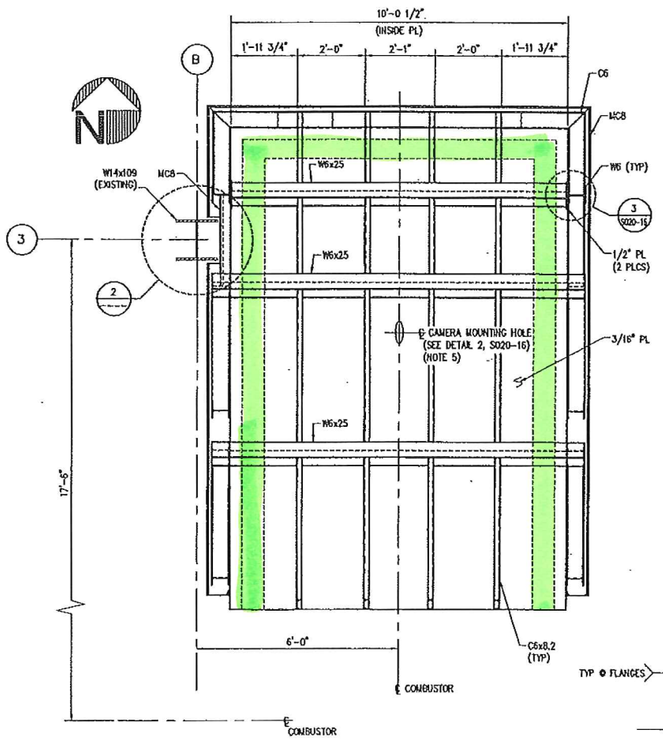

PLAN – MODULE #2
1/2"=1'-0" (UNIT 1 SHOWN)
(UNIT 2 OPP HAND)

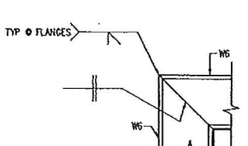

SECTION D
1 1/2" = 1'-0"

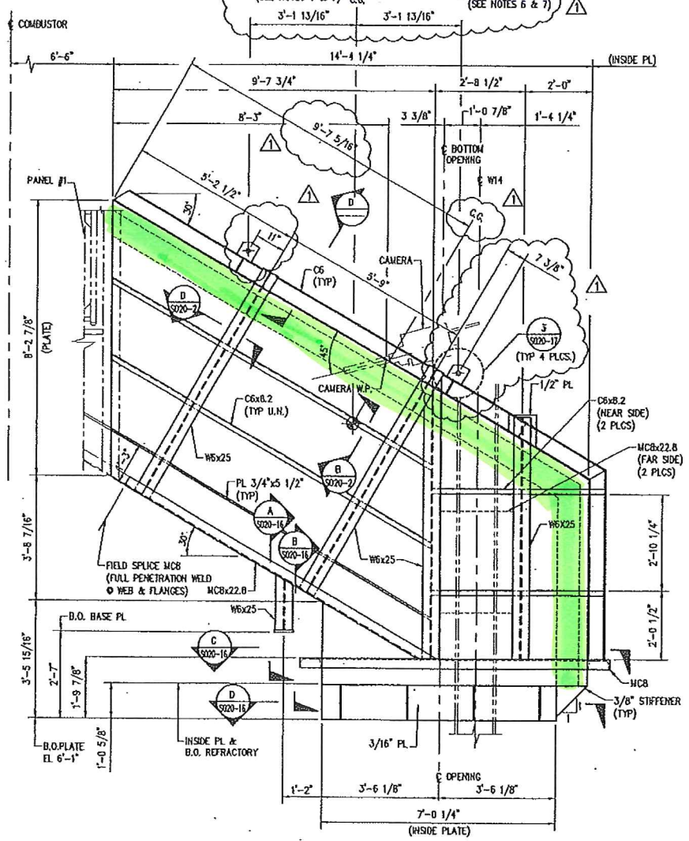

EAST ELEVATION – MODULE #2
1/2"=1'-0"

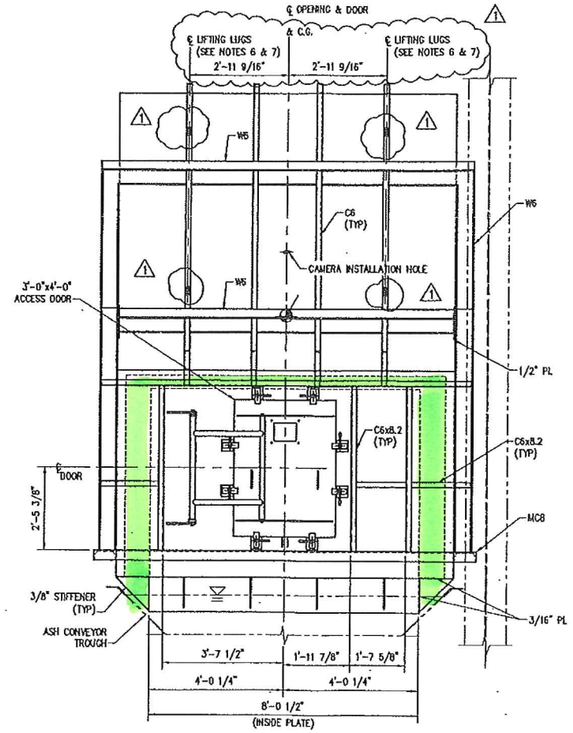

NORTH ELEVATION – MODULE #2
1/2"=1'-0"

PROPRIETARY & CONFIDENTIAL

THIS EQUIPMENT AND PROCESS IS PROTECTED UNDER U.S. PATENT NUMBERS 4,955,296 AND 5,044,288. OTHER U.S. AND INTERNATIONAL PATENTS PENDING.

REV	DATE	DESCRIPTION	DWG	CHK	APP
1	6/11/03	ADDED LIFTING LUGS FOR MODULE #2	DWS	CJH	
0	1/31/03	ISSUED FOR FABRICATION	DWS	CJH	EPE

THIS DOCUMENT AND THE INFORMATION IT CONTAINS ARE THE PROPERTY OF BARLOW ENGINEERING, LLC, ARE DISCLOSED IN CONFIDENCE FOR LIMITED USE AND MUST BE SURRENDERED TO BARLOW ENGINEERING, LLC ON DEMAND.

DISCLOSURE, PUBLICATION OR DISTRIBUTION OF THIS DOCUMENT WITHOUT PRIOR WRITTEN AUTHORIZATION FROM BARLOW ENGINEERING, LLC IS STRICTLY PROHIBITED.

COPYRIGHT BARLOW ENGINEERING, LLC AS OF THE DATE DRAWN OR REVISED.

Barlow Engineering Services, LLC.
116 Inverness Drive East
Englewood, CO
E-mail: mail@barlowprojects.com
Phone: (303) 792-0241
Fax: (303) 799-1338
Web: www.barlowprojects.com

BES PROJECT NO.	6015
DESIGNED BY:	DWS 12/11/02
DRAWN BY:	DWS 12/11/02
CHECKED BY:	CJH 1/7/03
APPROVED BY:	EPE 1/7/03
SCALE:	AS NOTED
	DO NOT SCALE THIS DRAWING. USE DIMENSIONS ONLY.

DRAWING TITLE:
COMBUSTOR
COMBUSTION UNIT 2
PLANS, SECTIONS & DETAILS

PROJECT: HARRISONBURG RESOURCE RECOVERY FACILITY

DRAWING NUMBER: S020

SHEET NUMBER: 15 REV: 1

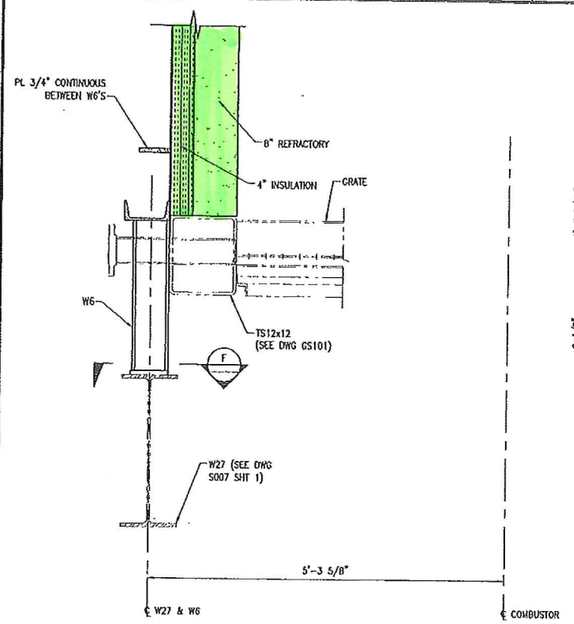

SECTION 1" = 1'-0" (A / S020-15)

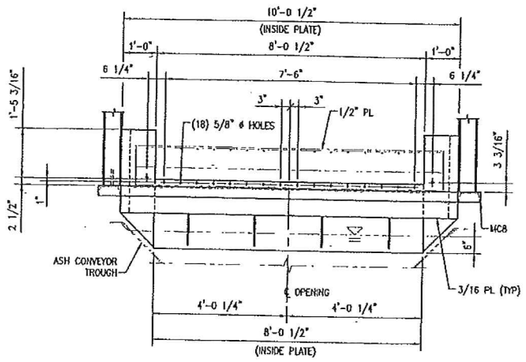

SECTION 1/2" = 1'-0" (B / S020-15)

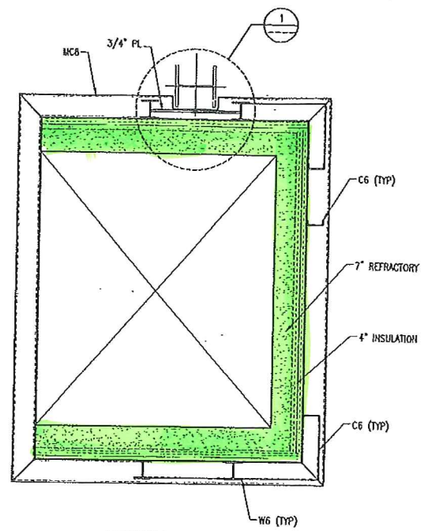

SECTION 1/2" = 1'-0" (C / S020-15)

NOTES:

1. WORK THIS DRAWING WITH DRAWINGS S020 SHT-1 AND S020 SHT-15
2. FOR ADDITIONAL TECHNICAL REQUIREMENTS SEE COMBUSTOR SPECIFICATION.
3. ALL COMBUSTOR SHELL PLATES TO BE 3/16" A36 UNLESS OTHERWISE NOTED.
4. ALL SHELL PLATE JOINTS SHALL BE MADE WITH FULL PENETRATION WELDS.

REFERENCE DRAWINGS:

BARLOW ENGINEERING SERVICES

S007-SHT 1 COMBUSTOR SUPPORT FRAME

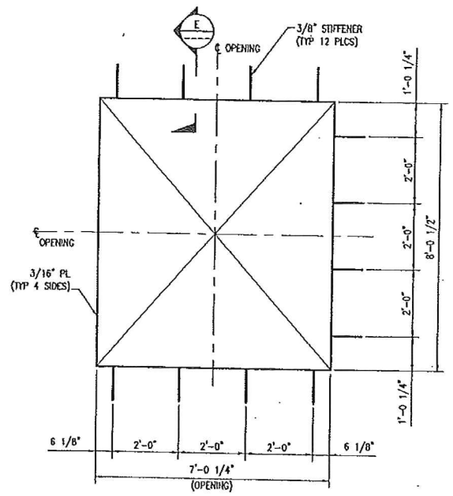

SECTION 1/2" = 1'-0" (D / S020-15)

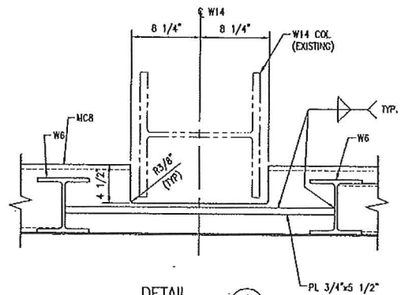

DETAIL 1 1/2"=1'-0" (1 / S020-15)

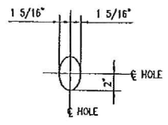

DETAIL 1 1/2"=1'-0" (2 / S020-15)

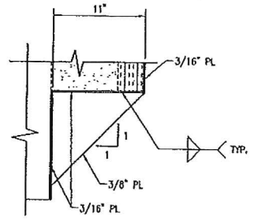

SECTION 1 1/2"=1'-0" (E)

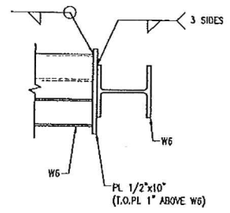

DETAIL 1 1/2"=1'-0" (3 / S020-15)

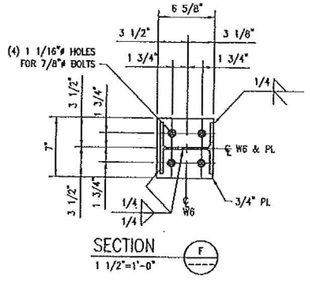

SECTION 1 1/2"=1'-0" (F)

D — Specific cleaning/demolition/removal requirements (See project documents)

PROPRIETARY & CONFIDENTIAL

THIS EQUIPMENT AND PROCESS IS PROTECTED UNDER U.S. PATENT NUMBERS 4,955,296 AND 5,044,288. OTHER U.S. AND INTERNATIONAL PATENTS PENDING.

REV	DATE	DESCRIPTION	DWG	CHK	APP
0	1/7/03	ISSUED FOR FABRICATION			

THIS DOCUMENT AND THE INFORMATION IT CONTAINS ARE THE PROPERTY OF BARLOW ENGINEERING, LLC, ARE DISCLOSED IN CONFIDENCE FOR LIMITED USE AND MUST BE SURRENDERED TO BARLOW ENGINEERING, LLC ON DEMAND.

DISCLOSURE, PUBLICATION OR DISTRIBUTION OF THIS DOCUMENT WITHOUT PRIOR WRITTEN AUTHORIZATION FROM BARLOW ENGINEERING, LLC IS STRICTLY PROHIBITED.

COPYRIGHT BARLOW ENGINEERING, LLC AS OF THE DATE DRAWN OR REVISED.

Barlow Engineering Services, LLC.
114 Inverness Drive East
Englewood, CO
E-mail: mgg@barlowprojects.com
Phone: (303) 792-0244
Fax: (303) 799-1338
Web: www.barlowprojects.com

BES PROJECT NO.	6015	
DESIGNED BY:	DWS	1/3/03
DRAWN BY:	DWS	1/7/03
CHECKED BY:	EPH	1/7/03
APPROVED BY:	TEL	1/7/03
SCALE:	AS NOTED	
	DO NOT SCALE THIS DRAWING. USE DIMENSIONS ONLY.	

DRAWING TITLE: COMBUSTOR
COMBUSTION UNIT 2
SECTIONS & DETAILS

DRAWING NUMBER: S020

PROJECT: HARRISONBURG RESOURCE RECOVERY FACILITY

SHEET NUMBER: 16 | REV: 0

NOTES:

1. WORK THIS DRAWING WITH DRAWINGS S020-1 THRU S020-9, S020-15 AND S090-1.
2. PLATE, CHANNEL, AND ANGLE MATERIAL SHALL BE ASTM A36.
3. ALL WELDING SHALL CONFORM TO AWS D1.1.
4. CUT OFF AND GRIND SMOOTH AFTER SECTION IS SECURELY IN PLACE.

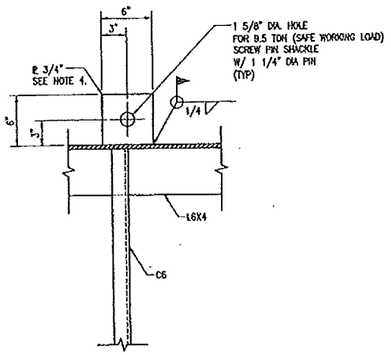

SECTION A S020-2
1 1/2"=1'-0"
S020-3
S020-7
S020-8
S020-9

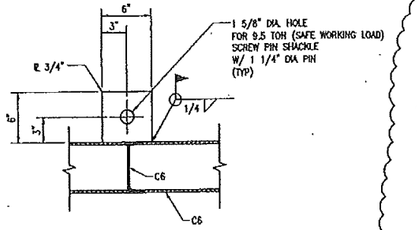

SECTION B S020-4
1 1/2"=1'-0"
S020-6

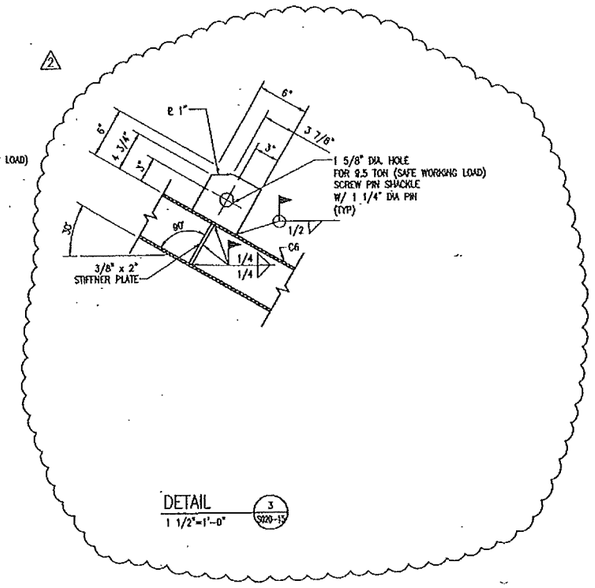

DETAIL 3 S020-15
1 1/2"=1'-0"

THIS EQUIPMENT AND PROCESS IS PROTECTED UNDER U.S. PATENT NUMBERS 4,955,296 AND 5,044,288. OTHER U.S. AND INTERNATIONAL PATENTS PENDING.

PROPRIETARY & CONFIDENTIAL

REV	DATE	DESCRIPTION	DWG	CHK	APP
2	6/19/03	ADDED SECTION C FOR MODULE #2			
1	5/29/03	REVISED LIFTING LUG DETAILS	SSR	DWS	FEL
0	4/21/03	ISSUED FOR CONSTRUCTION	SSR	DWS	FEL

THIS DOCUMENT AND THE INFORMATION IT CONTAINS ARE THE PROPERTY OF BARLOW ENGINEERING, LLC, ARE DISCLOSED IN CONFIDENCE FOR LIMITED USE AND MUST BE SURRENDERED TO BARLOW ENGINEERING, LLC ON DEMAND.

DISCLOSURE, PUBLICATION OR DISTRIBUTION OF THIS DOCUMENT WITHOUT PRIOR WRITTEN AUTHORIZATION FROM BARLOW ENGINEERING, LLC IS STRICTLY PROHIBITED.

COPYRIGHT BARLOW ENGINEERING, LLC AS OF THE DATE DRAWN OR REVISED.

Barlow Engineering Services, LLC.
116 Inverness Drive East
Englewood, CO
E-mail: mgg@barlowprojects.com
Phone: (303) 793-0248
Fax: (303) 799-1333
Web: www.barlowprojects.com

BPI PROJECT NO.	6015	
DESIGNED BY:	SSR	4/09/03
DRAWN BY:	SSR	4/17/03
CHECKED BY:	DWS	4/14/03
APPROVED BY:	FEL	4/21/03
SCALE:	AS NOTED	

DO NOT SCALE THIS DRAWING. USE DIMENSIONS ONLY.

DRAWING TITLE: COMBUSTOR LIFTING LUGS SECTIONS

PROJECT: HARRISONBURG RESOURCE RECOVERY FACILITY

DRAWING NUMBER: S020

SHEET NUMBER: 17 REV: 2

- To be cleaned and removed

- Specific cleaning/demolition/removal requirements (See project documents)

DO NOT SCALE USE DIMENSIONS ONLY	"NF" INDICATES NOT FURNISHED BY N.D.
DO NOT USE FOR CONSTRUCTION UNLESS APPROVED BELOW	

THIS DRAWING IS THE PROPERTY OF NATIONAL DYNAMICS COMPANY AND IS LOANED ON CONDITION THAT IT SHALL NOT BE COPIED OR REPRODUCED IN WHOLE OR IN PART OR DISCLOSED TO ANY THIRD PARTY OR USED IN ANY WAY WITHOUT THE WRITTEN CONSENT OF NATIONAL DYNAMICS COMPANY. ANY EQUIPMENT OR MATERIAL SHOWN, BUT NOT FURNISHED BY NATIONAL DYNAMICS COMPANY, IS FOR ILLUSTRATING THE APPLICATION, AND NATIONAL DYNAMICS COMPANY ACCEPTS NO RESPONSIBILITY AS TO THE INSTALLATION OR OPERATION OF SUCH EQUIPMENT OR MATERIALS.

REV.	DATE	DESCRIPTION	CN#	DWN	CKD	CKD DATE	APP	APP DATE
0	2/21/03	INITIAL RELEASE OF DRAWING	J03-004	RSB	JD	2/25/03	MM	2/25/03

1 ROPE GASKET (BY ERI)

(48) 1/2"-13UNC GR.5 BOLTS x 1 1/2" LG. W/ NUTS & WASHERS (BY ERI)

5 4 3

(60) 1/2"-13UNC GR.5 BOLTS x 1 1/2" LG. W/ NUTS & WASHERS (BY ERI)

3 4 5

(1) 1/2"-13UNC GR.5 BOLT x 1 3/4" LG. W/ NUT & DOUBLE WASHER (TYP. (12) PLC'S) (BY ERI)

4 3 2

PLATFORM

LADDER

BOILER

EXPANSION JOINT

BOILER TO ECONOMIZER DUCT

ECONOMIZER

(74) 1/2"-13UNC GR.5 BOLTS x 1 3/4" LG. W/ NUTS & WASHERS (BY ERI)

4 3 2

(1) 1/2"-13UNC GR.5 BOLT x 1 3/4" LG. W/ NUT & DOUBLE WASHER (TYP. (8) PLC'S) (BY ERI)

4 3 2

PLATFORM

PLATFORM SUPPORT

"A"

"A"

SECTION "A-A"

D1 D2 D3 D4 D5 D6 D6a D7 D9 E1

SIDE VIEW

TYP. 3/16

ECONOMIZER

ECONOMIZER ASH HOPPER

1"

2" TYP.

3/16 TYP.

BOILER ASH HOPPER

SUPPORT BEAM (BY OTHERS)

NOTES:

1. ◯ = ITEMS LISTED ON TJM-3596 TRIM LIST

□ = ITEMS LISTED ON BILL OF MATERIAL

BARLOW ENGINEERING

[ ] APPROVED [ ] APPROVED AS NOTED

[ ] NOT APPROVED [X] ACCEPTED AS CERTIFIED

THIS DRAWING HAS BEEN CHECKED FOR GENERAL COMPLIANCE WITH THE DESIGN CONCEPT OF THE PROJECT AND THE INFORMATION GIVEN IN THE PURCHASE ORDER. THIS SUPPLIER IS FULLY RESPONSIBLE FOR THE ENGINEERING DESIGN, FABRICATION, AND DIMENSIONAL ACCURACY OF THE EQUIPMENT. THE SUPPLIER IS ALSO RESPONSIBLE FOR THE MATERIALS AND SERVICES PROVIDED BY SUB-SUPPLIERS; THE ACTION SHOWN ABOVE DOES NOT RELIEVE THE SUPPLIER OF THIS RESPONSIBILITY.

DATE 4/2/03 BY

DOC CONTROL

MAR 0 4 2003

RECEIVED

National Dynamics An AQUA-CHEM Company

ASSY, ARRANGEMENT
SERIES: VLA-4-98

UNIT #1
CITY OF HARRISONBURG, VIRGINIA
HARRISONBURG, VIRGINIA

SCALE: 1/4" = 1'-0"

JOB NO.: TJM-3596

SERIAL NO.: W-4615

0

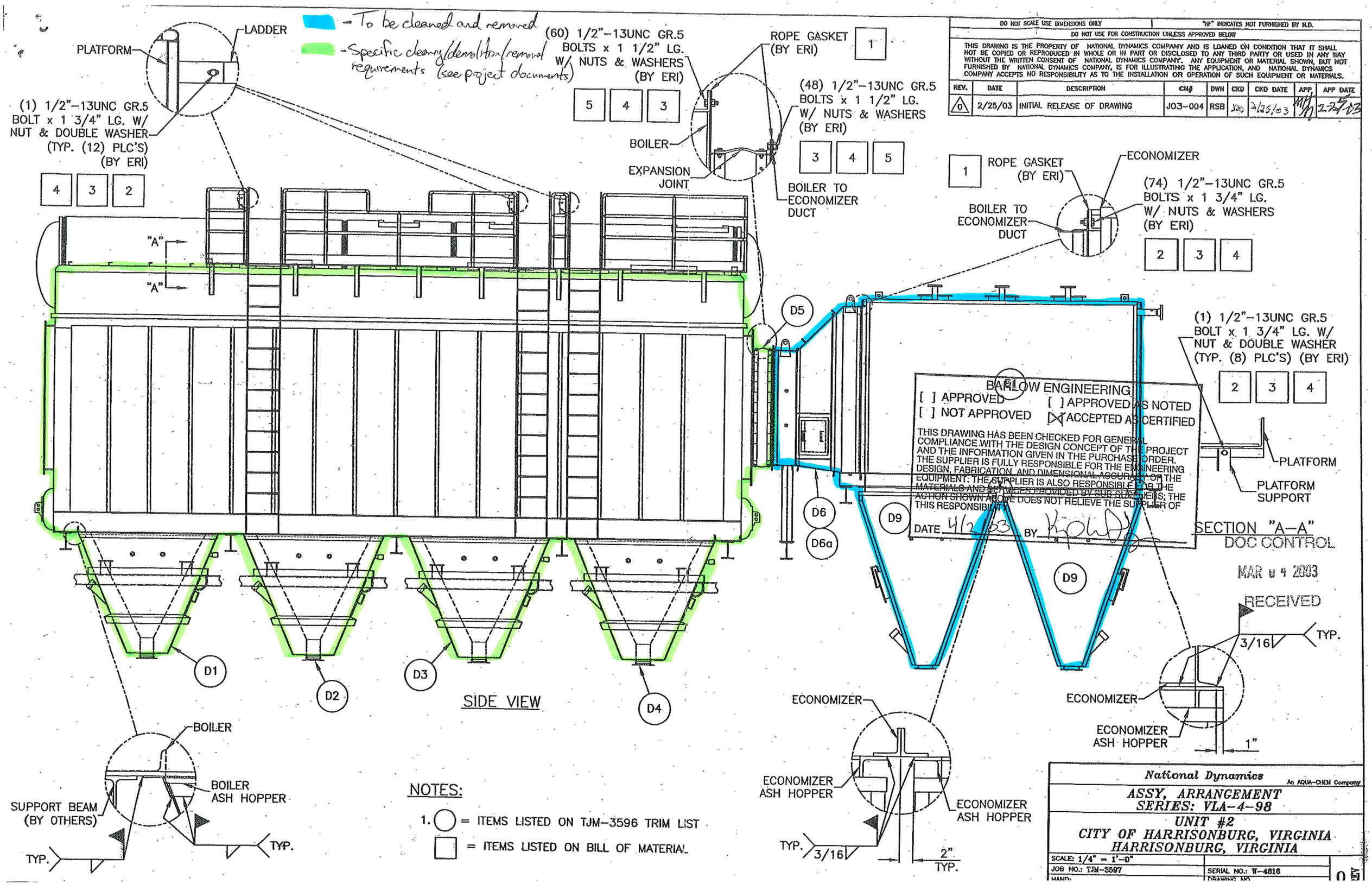

NOTES:

1. ◯ = ITEMS LISTED ON TJM-3596 TRIM LIST

□ = ITEMS LISTED ON BILL OF MATERIAL

DO NOT SCALE USE DIMENSIONS ONLY | "NF" INDICATES NOT FURNISHED BY N.D.

DO NOT USE FOR CONSTRUCTION UNLESS APPROVED BELOW

THIS DRAWING IS THE PROPERTY OF NATIONAL DYNAMICS COMPANY AND IS LOANED ON CONDITION THAT IT SHALL NOT BE COPIED OR REPRODUCED IN WHOLE OR IN PART OR DISCLOSED TO ANY THIRD PARTY OR USED IN ANY WAY WITHOUT THE WRITTEN CONSENT OF NATIONAL DYNAMICS COMPANY. ANY EQUIPMENT OR MATERIAL SHOWN, BUT NOT FURNISHED BY NATIONAL DYNAMICS COMPANY, IS FOR ILLUSTRATING THE APPLICATION, AND NATIONAL DYNAMICS COMPANY ACCEPTS NO RESPONSIBILITY AS TO THE INSTALLATION OR OPERATION OF SUCH EQUIPMENT OR MATERIALS.

REV.	DATE	DESCRIPTION	CN#	DWN	CKD	CKD DATE	APP	APP DATE
0	2/25/03	INITIAL RELEASE OF DRAWING	J03-004	RSB	[illegible]	2/25/03	[illegible]	2-25-03

BARLOW ENGINEERING

[ ] APPROVED [ ] APPROVED AS NOTED

[ ] NOT APPROVED [X] ACCEPTED AS CERTIFIED

THIS DRAWING HAS BEEN CHECKED FOR GENERAL COMPLIANCE WITH THE DESIGN CONCEPT OF THE PROJECT AND THE INFORMATION GIVEN IN THE PURCHASE ORDER. THE SUPPLIER IS FULLY RESPONSIBLE FOR THE ENGINEERING DESIGN, FABRICATION, AND DIMENSIONAL ACCURACY OF THE EQUIPMENT. THE SUPPLIER IS ALSO RESPONSIBLE FOR THE MATERIALS AND SERVICES PROVIDED BY SUB-SUPPLIERS; THE ACTION SHOWN ABOVE DOES NOT RELIEVE THE SUPPLIER OF THIS RESPONSIBILITY.

DATE 4/2/03 BY [illegible]

DOC CONTROL

MAR 04 2003

RECEIVED

National Dynamics — An AQUA-CHEM Company

ASSY, ARRANGEMENT SERIES: VLA-4-98

UNIT #2

CITY OF HARRISONBURG, VIRGINIA

HARRISONBURG, VIRGINIA

SCALE: 1/4" = 1'-0"

JOB NO.: TJM-3597

SERIAL NO.: W-4616

HAND:

DRAWING NO.

0

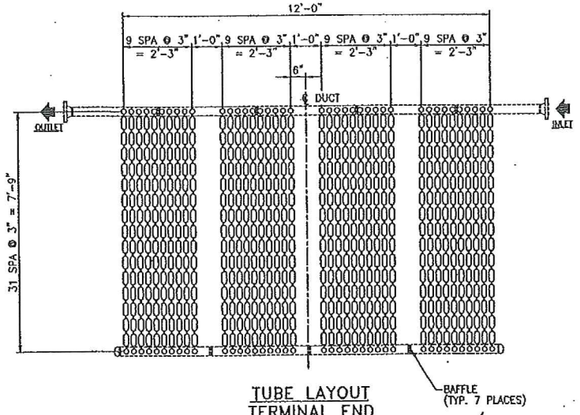

TUBE LAYOUT
TERMINAL END

- To be cleaned and removed

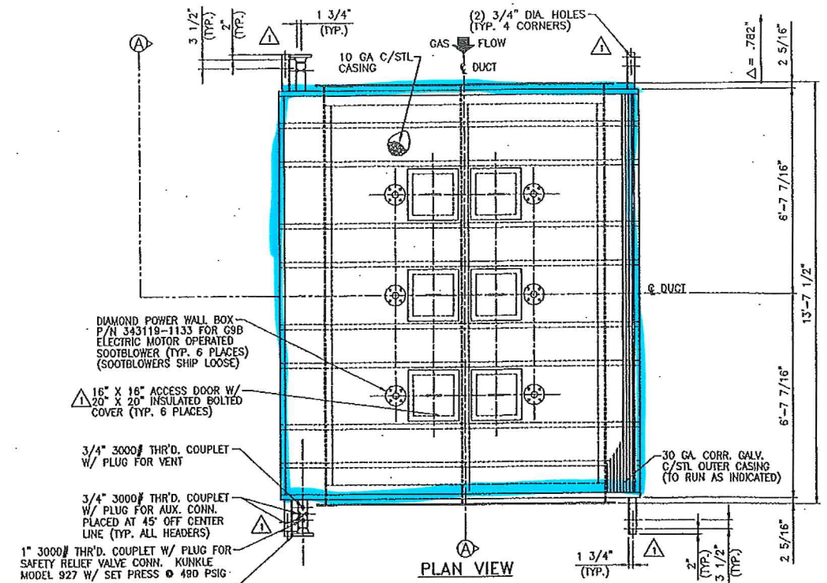

PLAN VIEW

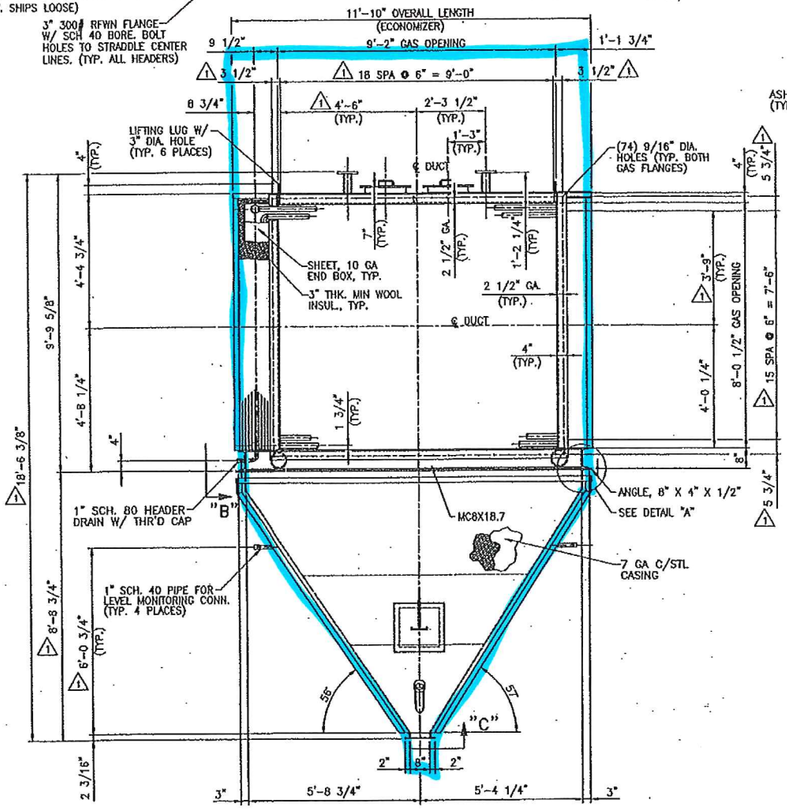

ELEVATION VIEW

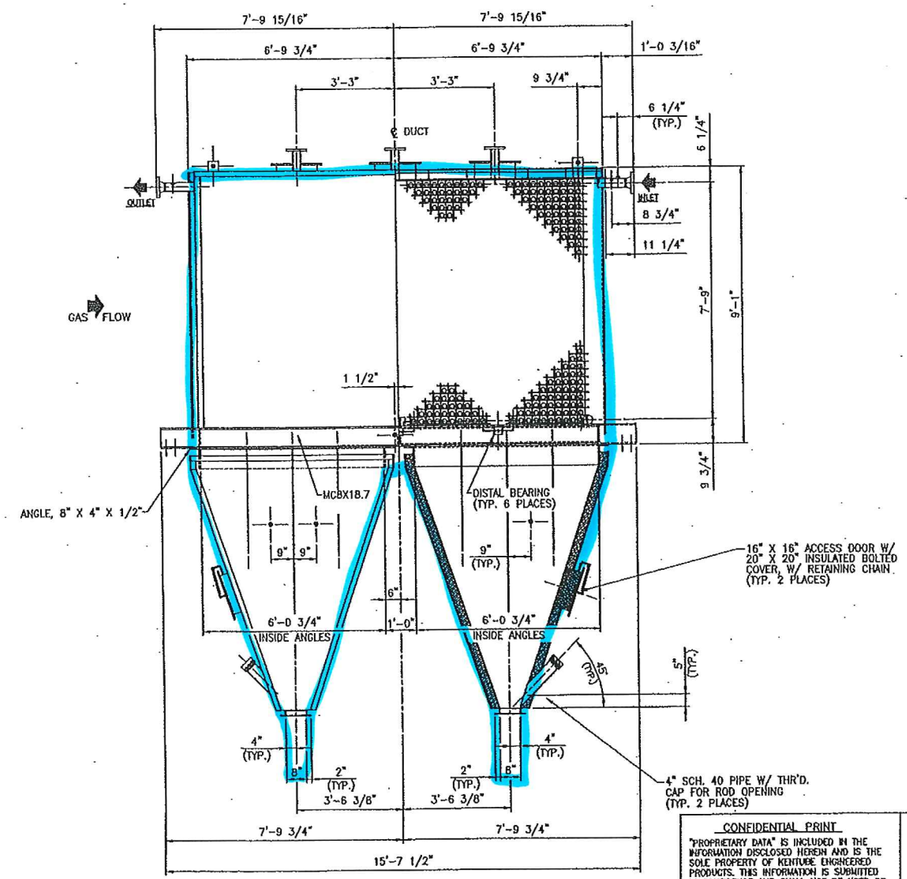

END VIEW
(SECTION A-A)

TOLERANCE: ± 3/16"

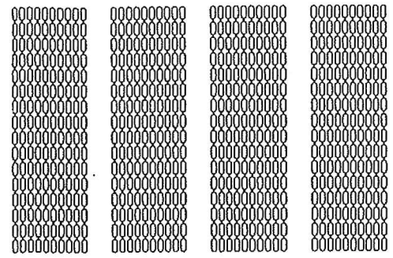

TUBE LAYOUT
RETURN END

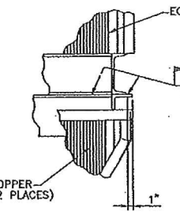

DETAIL "A"

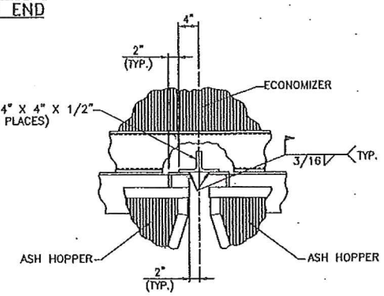

VIEW "B"

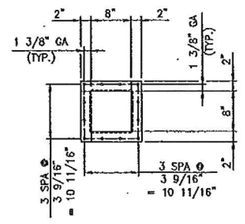

⚠ VIEW "C"

BARLOW ENGINEERING
[ ] APPROVED [ ] APPROVED AS NOTED
[ ] NOT APPROVED [X] ACCEPTED AS PER

THIS DRAWING HAS BEEN CHECKED FOR GENERAL COMPLIANCE WITH THE DESIGN CONCEPT OF THE PROJECT AND THE INFORMATION GIVEN IN THE PURCHASE ORDER. THE SUPPLIER IS FULLY RESPONSIBLE FOR THE ENGINEERING, DESIGN, FABRICATION, AND DIMENSIONAL ACCURACY OF THE EQUIPMENT. THE SUPPLIER IS ALSO RESPONSIBLE FOR THE MATERIALS AND SERVICES PROVIDED BY SUB-SUPPLIERS. THE ACTION SHOWN ABOVE DOES NOT RELIEVE THE SUPPLIER OF THIS RESPONSIBILITY.

DATE 11/20/2003 BY

- HORIZONTAL GAS FLOW
- CUSTOMER P.O. NO.: NB-104521
- LOCATION: HARRISONBURG, VA
- UNIT SERIAL NO.: 20027169
- ALL INNER CASING JOINTS TO BE SEAL WELDED
- RADIOGRAPHY: NOT REQ'D.
- POST WELD HEAT TREATMENT: NOT REQ'D
- TOTAL EFFECTIVE HT SURFACE: 6,144 SQ. FT.
- HEAT EXCHANGED: 4,570,680 BTU/HR
- EST. UNIT WEIGHT: 48,026# DRY, 65,490# WET
- NO. UNITS REQ'D: (2) REQ'D.; (1) AS SHOWN, (1) OPP. HAND
- PAINT: ONE COAT ALUMINUM PAINT ON ALL EXTERIOR SURFACES EXCEPT GALV. OUTER CASING (1 MIL D.F.T.)

DOC CONTROL
DEC 2 1 2002
RECEIVED
FILE # M120

HARRISONBURG RESOURCE RECOVERY FACILITY
BPI PO NO. 60150001
BPI TAG NO. 1EG-BLR001
BPI FILE NO. M120
BPI CONTRACT NO. 6015

ASH HOPPER WEIGHT:
- EMPTY: 5330 LB/EA (10,660 TOTAL)
- FILLED W/ ASH: 15,304 LB/EA (30,608 TOTAL)
- FILLED W/ WATER: 19,153 LB/EA (38,306 TOTAL)

ALLOWABLE LOADS
OUTLET GAS FLANGE: 40 KIPS

DESIGN DATA:
- CODE STAMP ASME SECTION I (2001 EDITION)
- DESIGN PRESSURE: 490 PSIG @ 700° F
- HYDRO TEST PRESSURE: 735 PSIG
- SHELL SIDE DESIGN PRESSURE: ±20" W.C.
- HEADER: 3" x SCH 40 x SA-106-B MAT'L
- TUBE: 2" O.D. x .135" M.W. x SA-178-A MAT'L

CONFIDENTIAL PRINT
"PROPRIETARY DATA" IS INCLUDED IN THE INFORMATION DISCLOSED HEREIN AND IS THE SOLE PROPERTY OF KENTUBE ENGINEERED PRODUCTS. THIS INFORMATION IS SUBMITTED IN CONFIDENCE AND SHALL NOT BE USED OR DISCLOSED TO OTHERS FOR MANUFACTURING OR FOR ANY OTHER PURPOSE EXCEPT AS SPECIFICALLY AUTHORIZED IN WRITING BY KENTUBE ENGINEERED PRODUCTS.

CERTIFIED FOR CONSTRUCTION
BY:
DATE:

REVISIONS

⚠1	REVISED HEIGHT ASH HOPPERS, GAS FLANGE CHANNEL, ACCESS DOOR NOTE, & SUPPORT FILL (PLAN VIEW) / ADDED BOLT HOLES TO GAS FLANGES & ASH HOPPER OUTLET, ELEC. MTD., ASH HOPPER MOUNTS, & REV C-C	AWB	12/19/02
		DRB	12/20/02

DWN.	AWB	12/4/02
CHKD.	TD	12/10/02

KENTUBE ENGINEERED PRODUCTS
555 W. 41st ST. TULSA, OKLAHOMA 74107
PHONE (918)446-4561 FAX (918)445-4001

ECONOMIZER ARRANGEMENT
FOR NEBRASKA BOILER COMPANY

SCALE	DWG. NO.	REV. NO.
NONE	20027169-1	01

RECEIVED
DOCUMENT CONTROL DEPT.
MAR 14 2003
BARLOW ENGINEERING SERVICES, LLC

BARLOW ENGINEERING
[ ] APPROVED AS NOTED
[ ] APPROVED [ ] ACCEPTED AS CERTIFIED
[ ] NOT APPROVED [X]
THIS DRAWING HAS BEEN CHECKED FOR GENERAL COMPLIANCE WITH THE DESIGN CONCEPT OF THE PROJECT AND THE INFORMATION GIVEN IN THE PURCHASE ORDER. THE SUPPLIER IS FULLY RESPONSIBLE FOR THE ENGINEERING DESIGN, FABRICATION, AND DIMENSIONAL ACCURACY OF THE EQUIPMENT. THE SUPPLIER IS ALSO RESPONSIBLE FOR THE MATERIALS AND SERVICES PROVIDED BY SUB-SUPPLIERS; THE ACTION SHOWN ABOVE DOES NOT RELIEVE THE SUPPLIER OF THIS RESPONSIBILITY.
DATE 4/3/03 BY

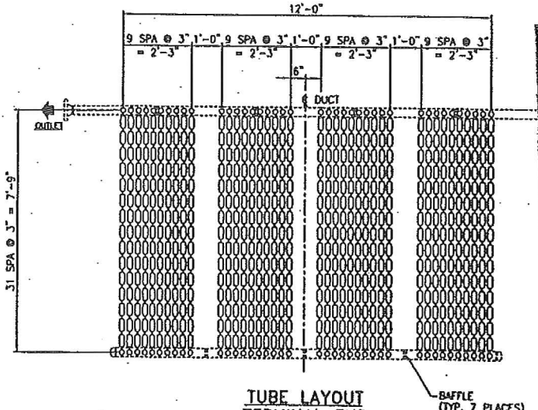

TUBE LAYOUT
TERMINAL END

= To be cleared and removed

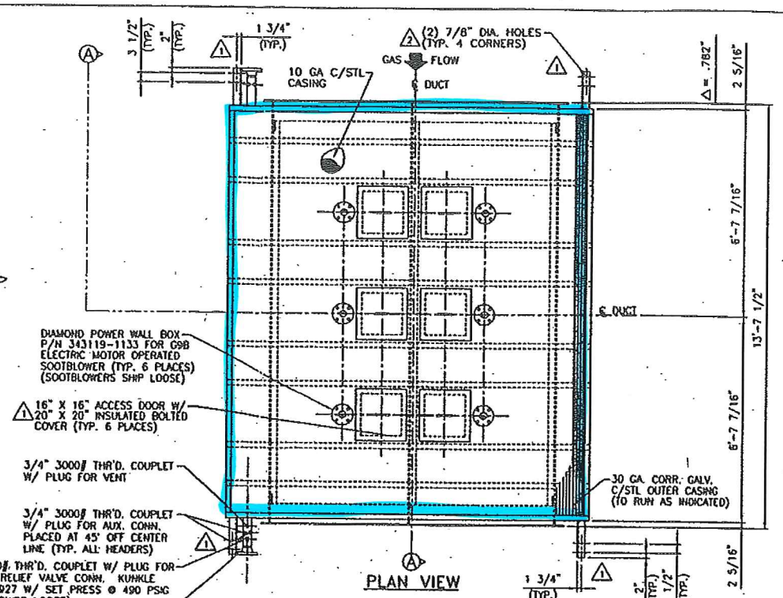

TUBE LAYOUT
RETURN END

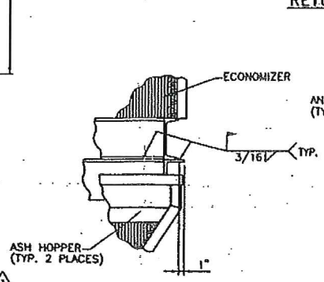

DETAIL "A"

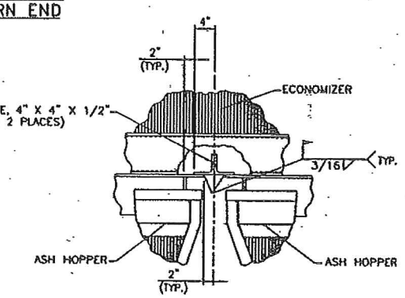

VIEW "B"

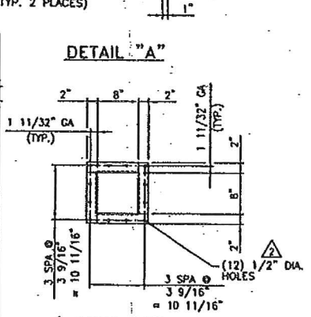

VIEW "C"

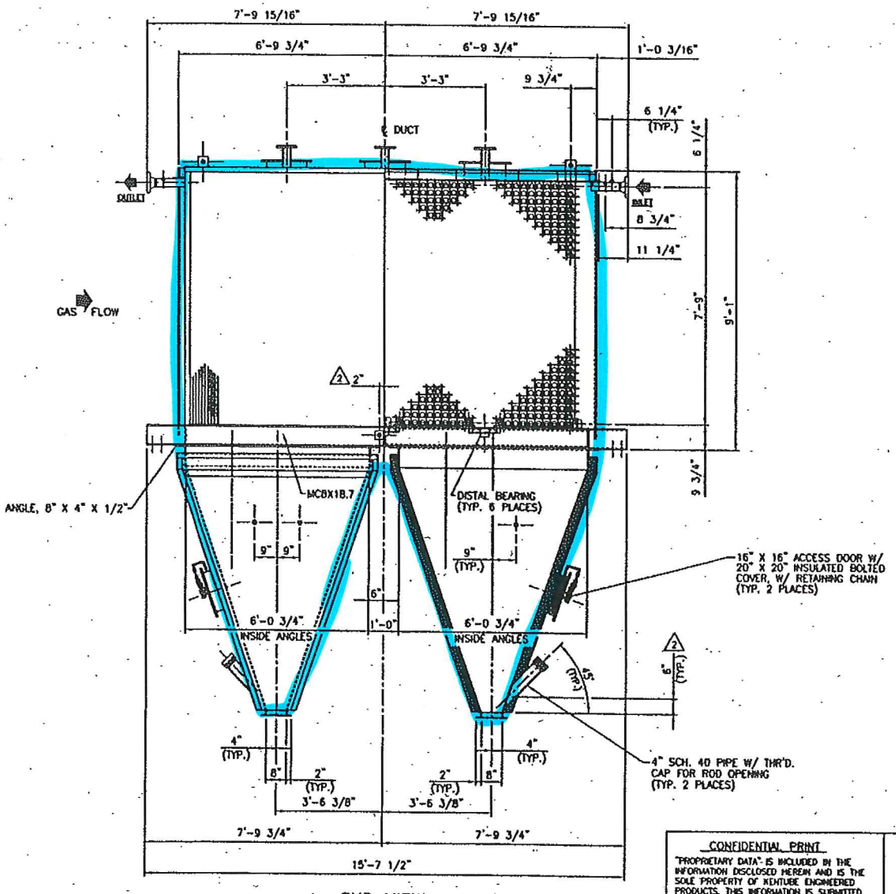

END VIEW
(SECTION A-A)

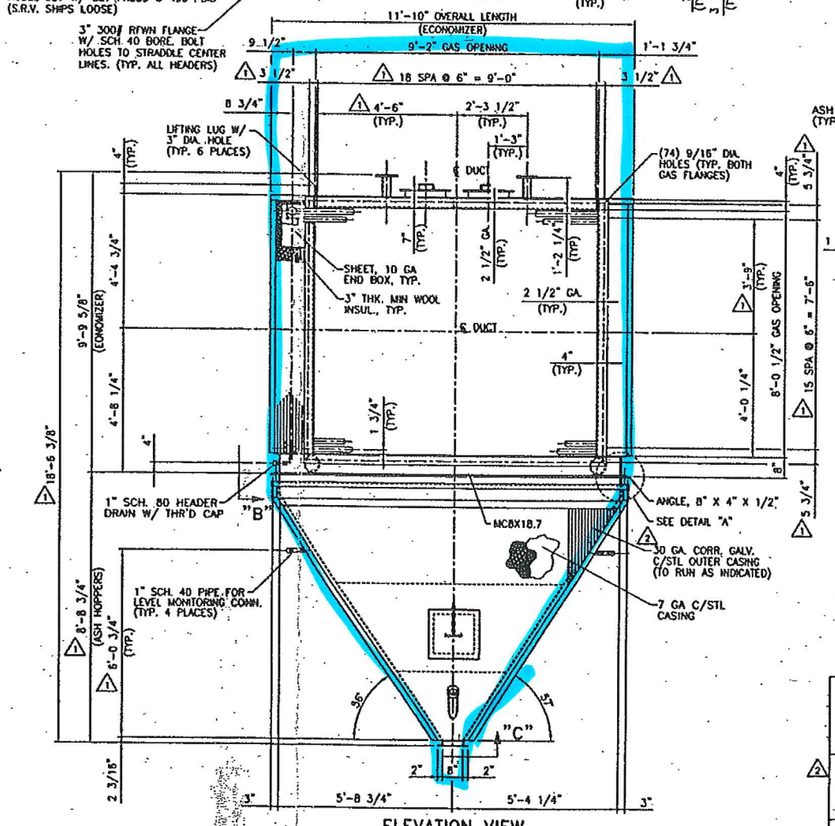

ELEVATION VIEW
(VIEW OF GAS OUTLET)

- HORIZONTAL GAS FLOW
- CUSTOMER P.O. NO.: NB-104521
- LOCATION: HARRISONBURG, VA
- UNIT SERIAL NO.: 20027169
- ALL INNER CASING JOINTS TO BE SEAL WELDED
- RADIOGRAPHY: NOT REQ'D.
- POST WELD HEAT TREATMENT: NOT REQ'D.
- TOTAL EFFECTIVE HT SURFACE: 6,144 SQ. FT.
- HEAT EXCHANGED: 4,578,680 BTU/HR
- EST. UNIT WEIGHT: 48,026# DRY, 65,490# WET
- NO. UNITS REQ'D: (1) REQ'D.
- PAINT: ONE COAT ALUMINUM PAINT ON ALL EXTERIOR SURFACES EXCEPT GALV. OUTER CASING (1 MIL D.F.T.)

HARRISONBURG RESOURCE RECOVERY FACILITY
BPI PO NO. 60150001
BPI TAG NO: 1FG-BLR001
BPI FILE NO. M120
BPI CONTRACT NO. 6015

ASH HOPPER WEIGHT:
- EMPTY: 5330 LB
- FILLED W/ ASH: 15,304 LB
- FILLED W/ WATER: 19,153 LB

ALLOWABLE LOADS
OUTLET GAS FLANGE: 40 KIPS

DESIGN DATA:
- CODE STAMP ASME SECTION I (2001 EDITION)
- DESIGN PRESSURE: 490 PSIG @ 700° F
- HYDRO TEST PRESSURE: 735 PSIG
- SHELL SIDE DESIGN PRESSURE: ±25" W.C.
- HEADER: 3" x SCH 40 x SA-106-B MAT'L
- TUBE: 2" O.D. x .135" M.W. x SA-178-A MAT'L

TOLERANCE: ± 3/16"

CONFIDENTIAL PRINT
"PROPRIETARY DATA" IS INCLUDED IN THE INFORMATION DISCLOSED HEREIN AND IS THE SOLE PROPERTY OF KENTUBE ENGINEERED PRODUCTS. THIS INFORMATION IS SUBMITTED IN CONFIDENCE AND SHALL NOT BE USED OR DISCLOSED TO OTHERS FOR MANUFACTURING OR FOR ANY OTHER PURPOSE EXCEPT AS SPECIFICALLY AUTHORIZED IN WRITING BY KENTUBE ENGINEERED PRODUCTS.

CERTIFIED FOR CONSTRUCTION
BY:
DATE: 3/7/03

REVISIONS		
2	REVISED I.D. ROD, SHELL SIDE DESIGN PRESS., BAF. BLOCK, ASH HOPPER WEIGHTS, AND CLEAN OUT HEADER BOX LOCATION	AWB 1/31/03
1	CUTOUT FOR BAF. SEE, CPT. ASH HOPPER DETAILS, & BOX OPENING ELEVATION / ADDED LIFTING LUGS / CLARIFIED	TD 3/7/03
	ADDED SIDE ASH HOPPERS, GAS FLANGE CHANGE, ADDED DOOR NOTE, & CLARIFIED BAFFLE BLOCK NOTE & CLARIFIED	AWB 12/10/03

DWN.	AWB	12/4/02
CHKD.	TD	12/10/02

KENTUBE ENGINEERED PRODUCTS
555 W. 41st ST. TULSA, OKLAHOMA 74107

ECONOMIZER ARRANGEMENT UNIT #1
FOR NEBRASKA BOILER COMPANY

SCALE	DWG. NO.	REV. NO.
	2	

RECEIVED
DOCUMENT CONTROL DEPT.
MAR 14 2003
BARLOW ENGINEERING SERVICES, LLC

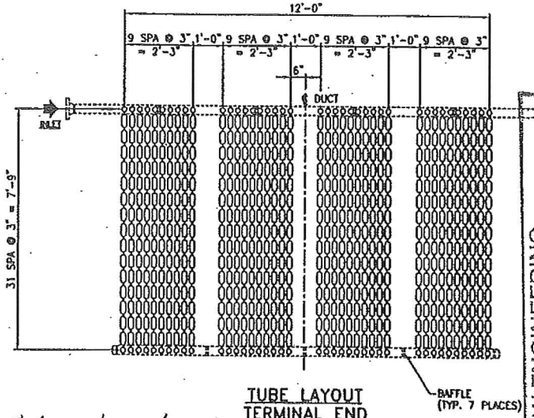

TUBE LAYOUT
TERMINAL END

BARLOW ENGINEERING
[ ] APPROVED [ ] APPROVED AS NOTED
[ ] NOT APPROVED [X] ACCEPTED AS CERTIFIED
THIS DRAWING HAS BEEN CHECKED FOR GENERAL COMPLIANCE WITH THE DESIGN CONCEPT OF THE PROJECT AND THE INFORMATION GIVEN IN THE PURCHASE ORDER. THE SUPPLIER IS FULLY RESPONSIBLE FOR THE ENGINEERING DESIGN, FABRICATION, AND DIMENSIONAL ACCURACY OF THE EQUIPMENT. THE SUPPLIER IS ALSO RESPONSIBLE FOR THE MATERIALS AND SERVICES PROVIDED BY SUB-SUPPLIERS; THE ACTION SHOWN ABOVE DOES NOT RELIEVE THE SUPPLIER OF THIS RESPONSIBILITY.
DATE 4/3/03 BY KDW

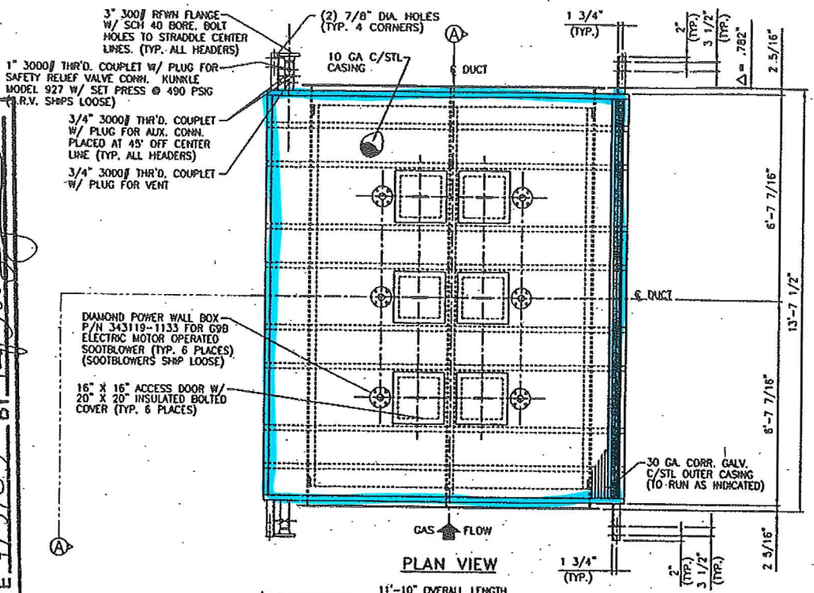

PLAN VIEW

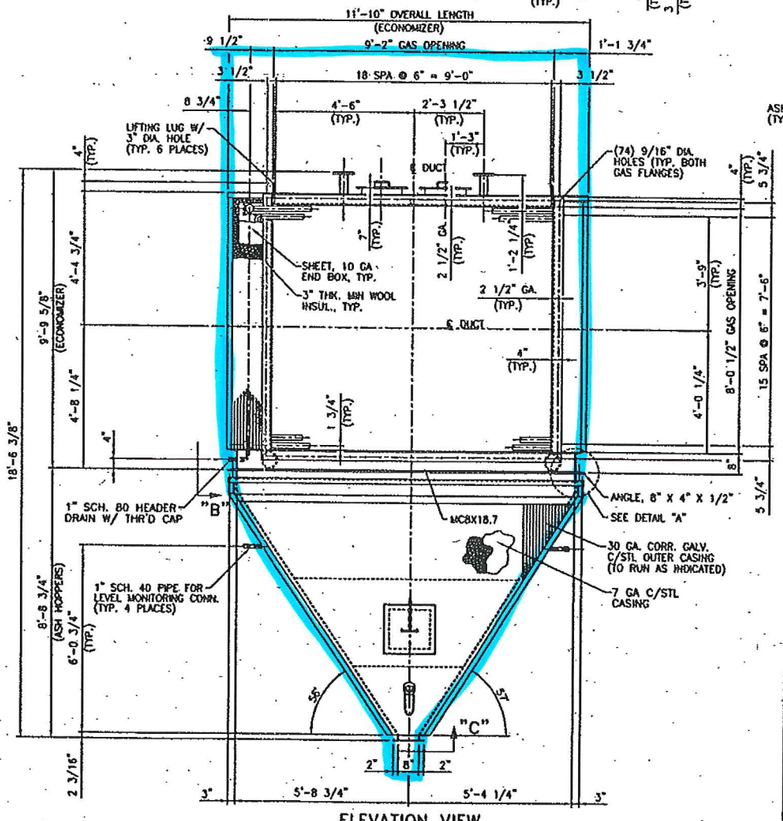

ELEVATION VIEW
(VIEW OF GAS INLET)

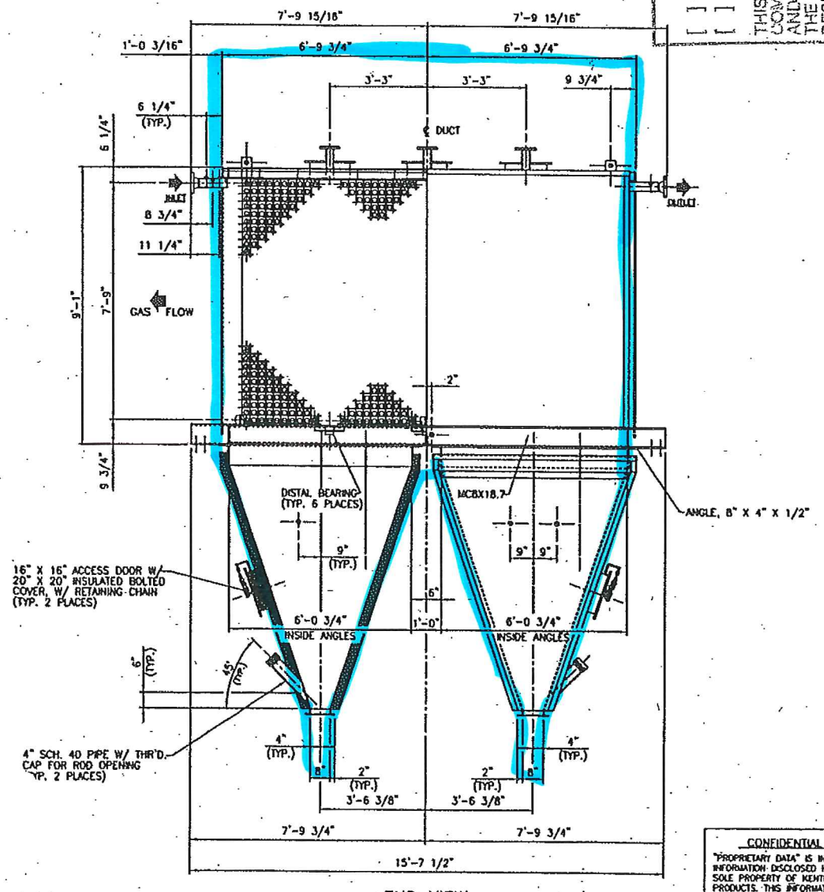

END VIEW
(SECTION A-A)

TOLERANCE: ± 3/16"

TUBE LAYOUT
RETURN END

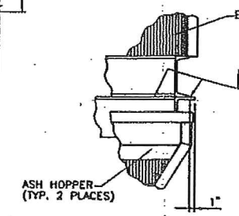

DETAIL "A"

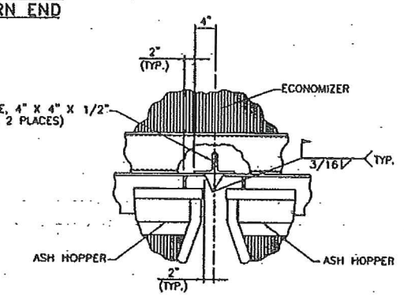

VIEW "B"

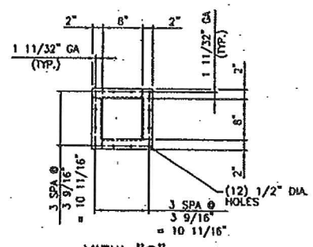

VIEW "C"

- HORIZONTAL GAS FLOW
- CUSTOMER P.O. NO.: NB-104521
- LOCATION: HARRISONBURG, VA
- UNIT SERIAL NO.: 20027169-2
- ALL INNER CASING JOINTS TO BE SEAL WELDED
- RADIOGRAPHY: NOT REQ'D.
- POST WELD HEAT TREATMENT: NOT REQ'D.
- TOTAL EFFECTIVE HT SURFACE: 6,144 SQ. FT.
- HEAT EXCHANGED: 4,578,680 BTU/HR
- EST. UNIT WEIGHT: 48,026# DRY, 65,490# WET
- NO. UNITS REQ'D: (1) REQ'D.
- PAINT: ONE COAT ALUMINUM PAINT ON ALL EXTERIOR SURFACES EXCEPT GALV. OUTER CASING (1 MIL D.F.T.)

HARRISONBURG RESOURCE RECOVERY FACILITY
BPI PO NO. 60150001
BPI TAG NO. 1FG-BLR001
BPI FILE NO. M120
BPI CONTRACT NO. 6015

ASH HOPPER WEIGHT:
- EMPTY: 5330 LB
- FILLED W/ ASH: 15,304 LB
- FILLED W/ WATER: 19,153 LB

ALLOWABLE LOADS
OUTLET GAS FLANGE: 40 KIPS

DESIGN DATA:
- CODE STAMP ASME SECTION I (2001 EDITION)
- DESIGN PRESSURE: 490 PSIG @ 707° F
- HYDRO TEST PRESSURE: 735 PSIG
- SHELL SIDE DESIGN PRESSURE: ±25" W.C.
- HEADER: 3" x SCH 40 x SA-106-B MAT'L
- TUBE: 2" O.D. x .135" M.W. x SA-178-A MAT'L

CONFIDENTIAL PRINT
"PROPRIETARY DATA" IS INCLUDED IN THE INFORMATION DISCLOSED HEREIN AND IS THE SOLE PROPERTY OF KENTUBE ENGINEERED PRODUCTS. THIS INFORMATION IS SUBMITTED IN CONFIDENCE AND SHALL NOT BE USED OR DISCLOSED TO OTHERS FOR MANUFACTURING OR FOR ANY OTHER PURPOSE EXCEPT AS SPECIFICALLY AUTHORIZED IN WRITING BY KENTUBE ENGINEERED PRODUCTS.

CERTIFIED FOR CONSTRUCTION
BY: Jim R Reid
DATE: 3/7/03

REVISIONS			
	DWN.	AWB	1/31/03
	CHKD.	TD	3/7/03

KENTUBE ENGINEERED PRODUCTS
555 W. 41st ST. TULSA, OKLAHOMA 74107
PHONE (918)446-4561 FAX (918)445-4001

ECONOMIZER ARRANGEMENT UNIT #2
FOR NEBRASKA BOILER COMPANY

SCALE	DWG. NO.	REV. NO.
NONE	20027169-1-2	0

- To be cleaned and removed

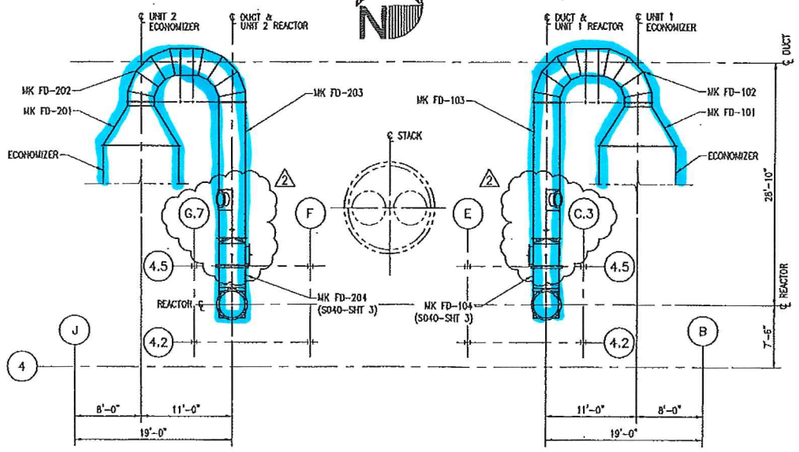

LOCATION PLAN
1/8"=1'-0"

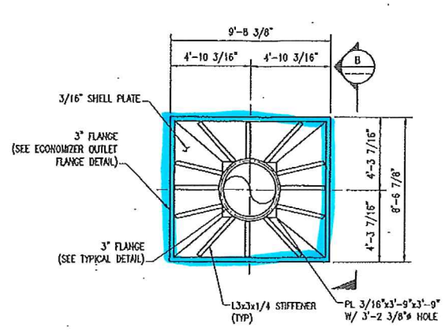

MK FD-101 ELEVATION
1/4"=1'-0" (LOOKING SOUTH)

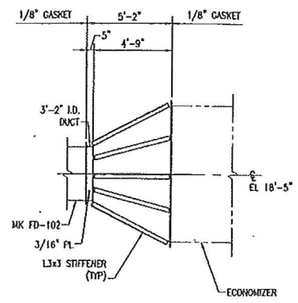

SECTION
1/4" = 1'-0"

NOTES:

1. WORK THIS DRAWING WITH DWG S040-SHT 1 AND SHT 3.
2. FOR ADDITIONAL TECHNICAL REQUIREMENTS SEE SPECIFICATION SP-5210 – APC SYSTEM STRUCTURES.
3. ALL DUCT SHELL PLATES TO BE 3/16" A36 UNLESS OTHERWISE NOTED.
4. ALL SHELL PLATE JOINTS SHALL BE MADE WITH FULL PENETRATION WELDS.
5. PROVIDE INSULATION AND LAGGING ON ALL DUCTWORK SURFACES TO LIMIT THE LAGGING SURFACE TEMPERATURE TO 140° F.

REFERENCE DRAWINGS:

BARLOW ENGINEERING SERVICES

S006-SHT 1 REACTOR SUPPORT FRAMING
S025-SHT 1 VENTURI REACTOR

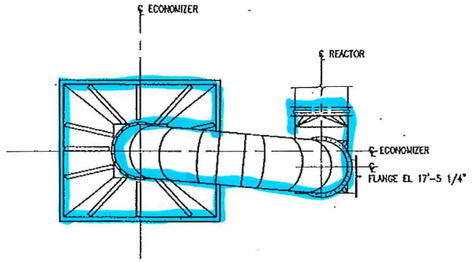

ELEVATION – LOOKING SOUTH
1/4"=1'-0" (UNIT 1 SHOWN)

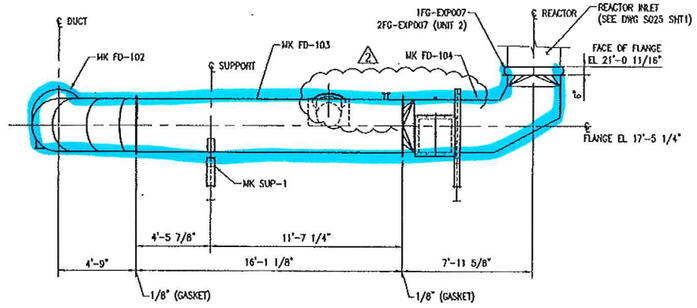

ELEVATION – LOOKING EAST
1/4"=1'-0" (UNIT 1 SHOWN)

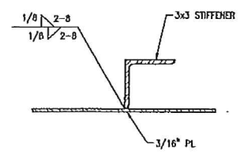

STIFFENER WELD DETAIL
3"=1'-0"

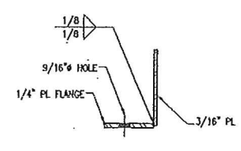

FLANGE WELD DETAIL
3"=1'-0"

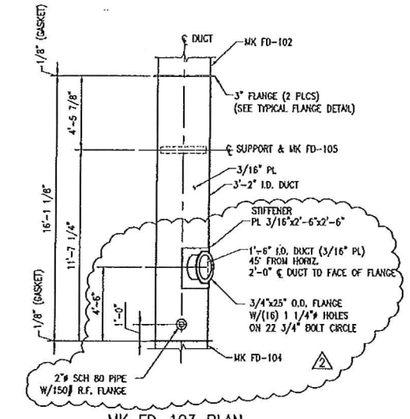

MK FD-103 PLAN
1/4"=1'-0"

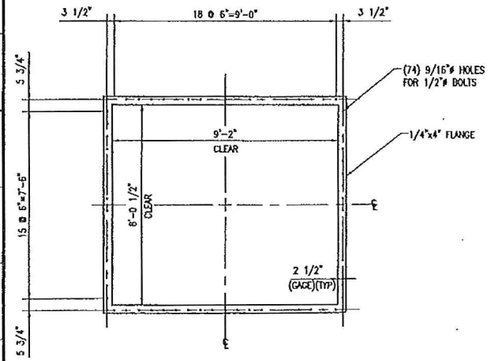

ECONOMIZER OUTLET FLANGE DETAIL
3/8"=1'-0"

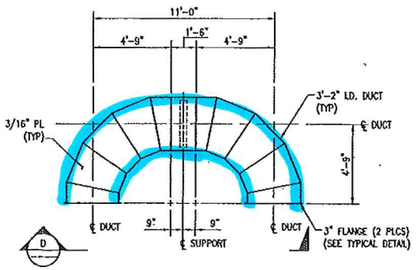

MK FD-102 PLAN
1/4"=1'-0"

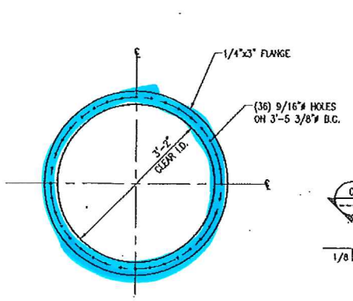

TYPICAL FLANGE DETAIL
3/4"=1'-0"

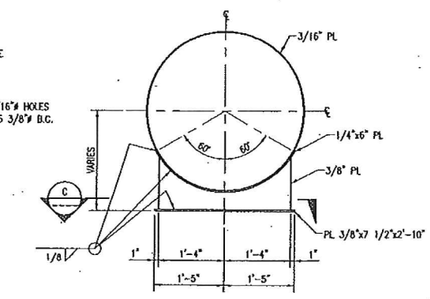

TYPICAL SUPPORT DETAIL
3/4"=1'-0"

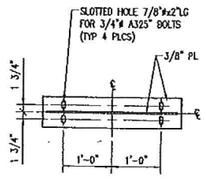

SECTION
3/4"=1'-0"

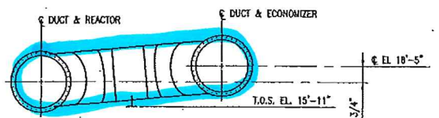

SECTION
1/4" = 1'-0"

REV	DATE	DESCRIPTION	DWG	CHK	APP
2	11/16/12	ADDED 3" FLANGE & 18" DUCT W/FLANGE	EJT	BJH	
1	11/9/12	REMOVED HOLES ADDED ENTIRE SHEET	DTH	CDW	EPW
0	11/8/12	ISSUED FOR FABRICATION	LT	DTH	DMS

PROPRIETARY & CONFIDENTIAL

THIS DOCUMENT AND THE INFORMATION IT CONTAINS ARE THE PROPERTY OF BARLOW ENGINEERING, LLC, ARE DISCLOSED IN CONFIDENCE FOR LIMITED USE AND MUST BE SURRENDERED TO BARLOW ENGINEERING, LLC ON DEMAND.

DISCLOSURE, PUBLICATION OR DISTRIBUTION OF THIS DOCUMENT WITHOUT PRIOR WRITTEN AUTHORIZATION FROM BARLOW ENGINEERING, LLC IS STRICTLY PROHIBITED.

COPYRIGHT BARLOW ENGINEERING, LLC AS OF THE DATE DRAWN OR REVISED.

Barlow Engineering Services, LLC.
114 Inverness Drive East
Englewood, CO
E-mail: mail@barlowprojects.com
Phone: (303) 792-0244
Fax: (303) 799-3333
Web: www.barlowprojects.com

BES PROJECT NO.	6015
DESIGNED BY:	DMS 8/27/12
DRAWN BY:	DMS 8/27/12
CHECKED BY:	DTH 8/9/12
APPROVED BY:	FCL 8/9/12
SCALE:	AS NOTED

DO NOT SCALE THIS DRAWING. USE DIMENSIONS ONLY.

DRAWING TITLE: FLUE GAS DUCTWORK ECONOMIZER OUTLET DUCT

DRAWING NUMBER: S040

PROJECT: HARRISONBURG RESOURCE RECOVERY FACILITY

SHEET NUMBER: 2 OF: 2

-To be removed

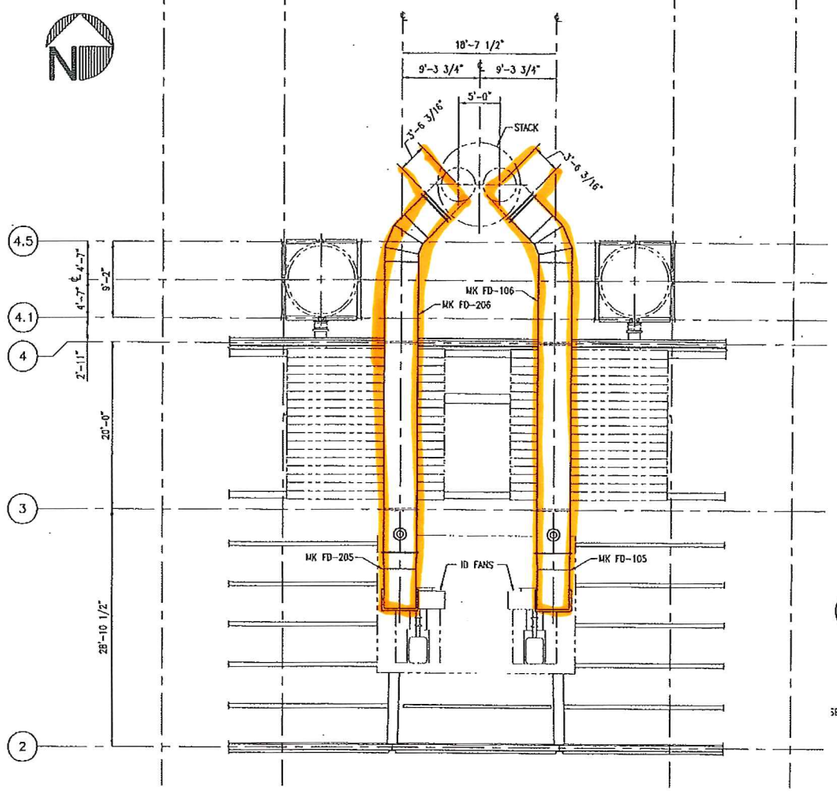

LOCATION PLAN
1/8"=1'-0"

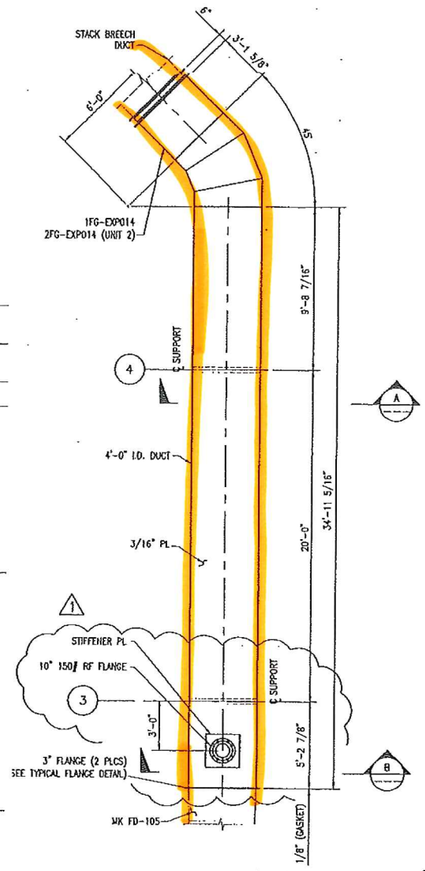

MK FD-106 (206) PLAN
1/4"=1'-0" (UNIT 1 SHOWN) (UNIT 2 OPP. HAND)

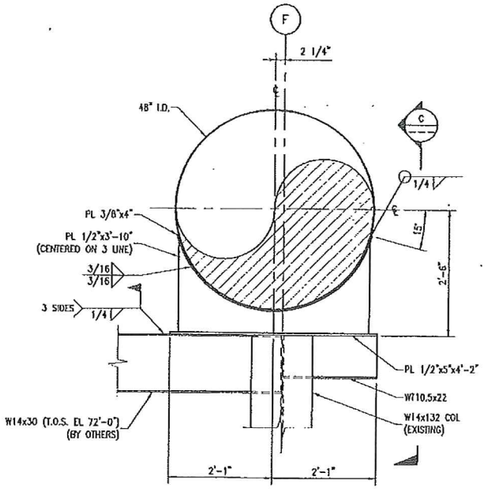

SECTION
3/4" = 1'-0"

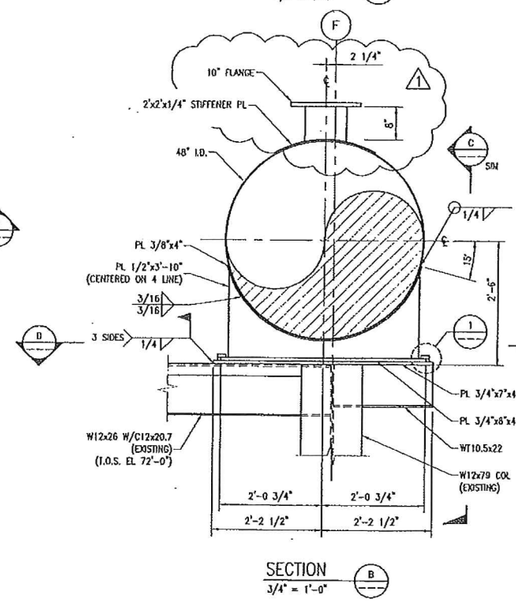

SECTION
3/4" = 1'-0"

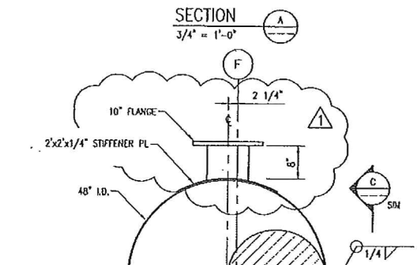

SECTION
3/4" = 1'-0"

NOTES:

1. FOR ADDITIONAL TECHNICAL REQUIREMENTS SEE SPECIFICATION SP-5210 – APC SYSTEM STRUCTURES.
2. ALL DUCT SHELL PLATES TO BE 3/16" A36 UNLESS OTHERWISE NOTED.
3. ALL SHELL PLATE JOINTS SHALL BE MADE WITH FULL PENETRATION WELDS.
4. PROVIDE INSULATION AND LAGGING ON ALL DUCTWORK SURFACES TO LIMIT THE LAGGING SURFACE TEMPERATURE TO 140° F.

REFERENCE DRAWINGS:

WILLIAM F. COSULICH ASSOCIATES, P.C.

S-10 COL LINE 3 FRAMING
S-10A COL LINE 4 FRAMING

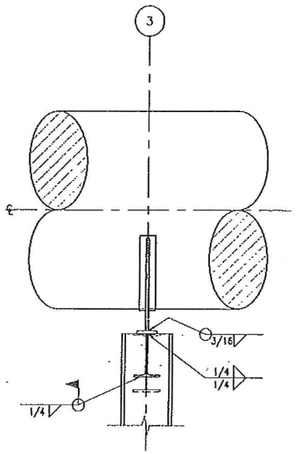

SECTION
3/4" = 1'-0"

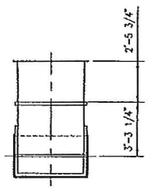

MK FD-105 PLAN
1/4"=1'-0"

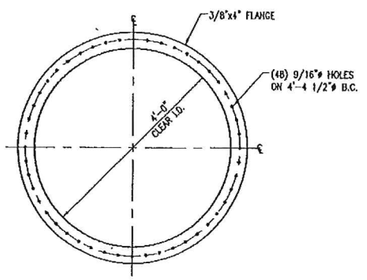

TYPICAL FLANGE DETAIL
3/4"=1'-0"

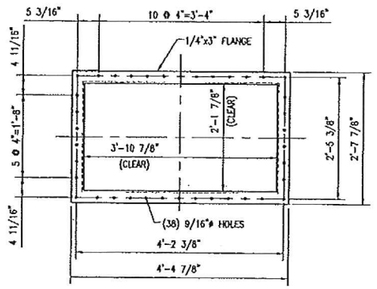

RECTANGULAR FLANGE DETAIL
3/4"=1'-0"

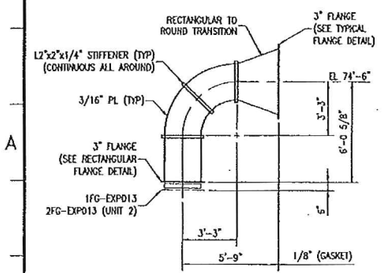

MK FD-105 (205) ELEVATION
1/4"=1'-0" (LOOKING WEST)

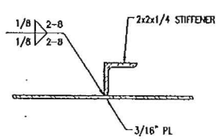

STIFFENER WELD DETAIL
3"=1'-0"

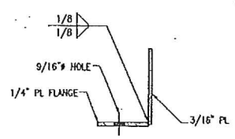

FLANGE WELD DETAIL
3"=1'-0"

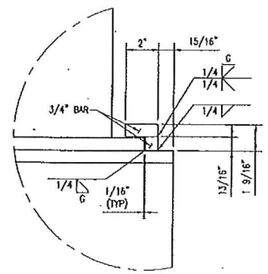

DETAIL
3" = 1'-0"

PROPRIETARY & CONFIDENTIAL

REV	DATE	DESCRIPTION	DWG	CHK	APP
1	1/30/03	ADDED 10" FLANGE	LT	CPH	DWS
0	12/18/02	ISSUED FOR FABRICATION	LT	CPH	DWS

THIS DOCUMENT AND THE INFORMATION IT CONTAINS ARE THE PROPERTY OF BARLOW ENGINEERING, LLC, ARE DISCLOSED IN CONFIDENCE FOR LIMITED USE AND MUST BE SURRENDERED TO BARLOW ENGINEERING, LLC ON DEMAND.

DISCLOSURE, PUBLICATION OR DISTRIBUTION OF THIS DOCUMENT WITHOUT PRIOR WRITTEN AUTHORIZATION FROM BARLOW ENGINEERING, LLC IS STRICTLY PROHIBITED.

COPYRIGHT BARLOW ENGINEERING, LLC AS OF THE DATE DRAWN OR REVISED.

Barlow Engineering Services, LLC.
116 Inverness Drive East
Englewood, CO
E-mail: engr@bes-project.com
Phone: (303) 799-0248
Fax: (303) 799-1256
Web: www.bes-project.com

BES PROJECT NO:	6015	
DESIGNED BY:	DWS	08/13/02
DRAWN BY:	DLH	08/13/02
CHECKED BY:	CPH	08/04/02
APPROVED BY:	PEL	08/05/02
SCALE:	AS NOTED	
	DO NOT SCALE THIS DRAWING. USE DIMENSIONS ONLY.	

DRAWING TITLE: FLUE GAS DUCTWORK I.D. FAN DISCHARGE TO STACK

DRAWING NUMBER: S040

PROJECT: HARRISONBURG RESOURCE RECOVERY FACILITY

SHEET NUMBER: 4 REV: 1

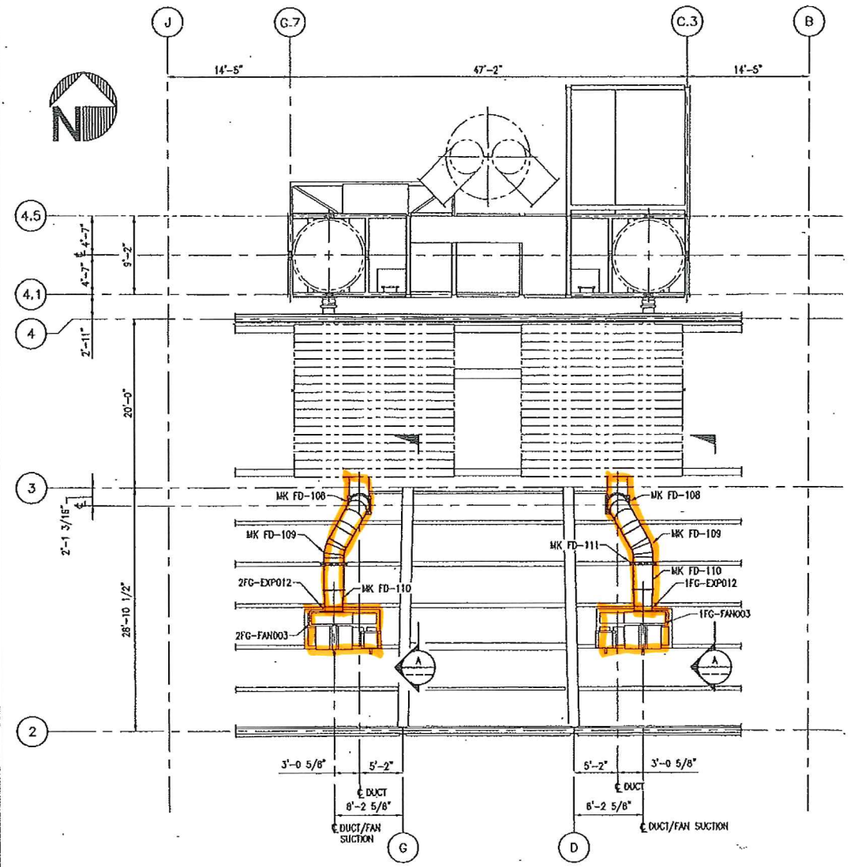

PLAN
1/8"=1'-0"

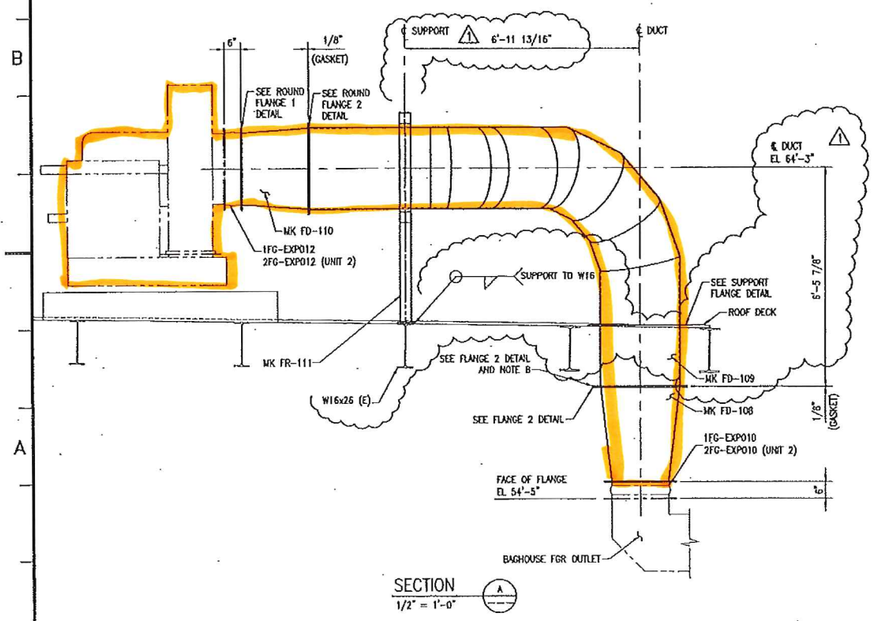

SECTION
1/2" = 1'-0"
A

-To be removed

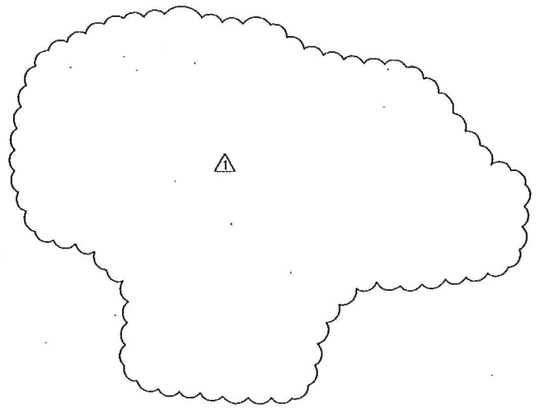

NOTES:

1. WORK THIS DRAWING WITH DWG S040-SHT 3 & 8.
2. FOR ADDITIONAL TECHNICAL REQUIREMENTS SEE SPECIFICATION SP-S210 – APC SYSTEM STRUCTURES.
3. ALL DUCT SHELL PLATES TO BE 3/16" A36 UNLESS OTHERWISE NOTED.
4. ALL SHELL PLATE JOINTS SHALL BE MADE WITH FULL PENETRATION WELDS.
5. PROVIDE INSULATION AND LAGGING ON ALL DUCTWORK SURFACES TO LIMIT THE LAGGING SURFACE TEMPERATURE TO 140° F.
6. FIELD WELD BOTTOM FLANGE AFTER INSTALLATION OF DUCT THROUGH ROOF.
7. EXPANSION JOINTS BY OTHERS.
8. FIELD WELD BOTTOM FLANGE OF MK-FD-109 AFTER INSTALLATION THRU ROOF.

REFERENCE DRAWINGS:

BARLOW ENGINEERING SERVICES

S006-SHT 1 REACTOR SUPPORT FRAMING

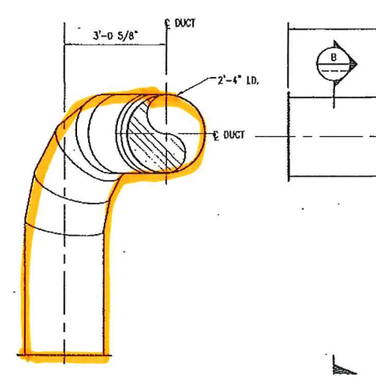

SECTION
1/2" = 1'-0"
B

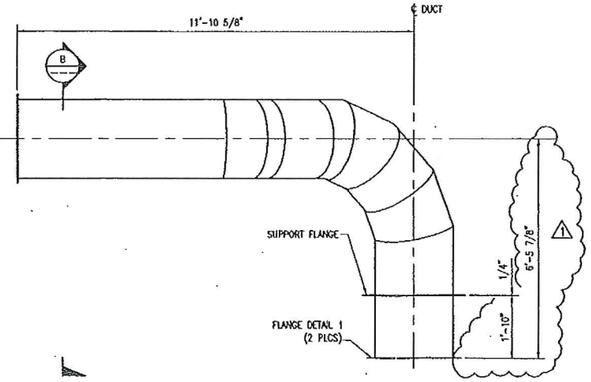

MK FD-109
1/2"=1'-0"
(UNIT 1 SHOWN)
(UNIT 2 OPP HAND)

PROPRIETARY & CONFIDENTIAL

REV	DATE	DESCRIPTION	DWG	CHK	APP
1	5-09-12	MODIFIED MK FD-108, DUCT ELEV.; MOVE SUPPORT; ROOF CONFIG; REMOVE DETAIL 1	LJ	DPH	DMS
0	12/10/02	ISSUED FOR INSPECTION	LJ	DPH	DMS

THIS DOCUMENT AND THE INFORMATION IT CONTAINS ARE THE PROPERTY OF BARLOW ENGINEERING, LLC, ARE DISCLOSED IN CONFIDENCE FOR LIMITED USE AND MUST BE SURRENDERED TO BARLOW ENGINEERING, LLC ON DEMAND.

DISCLOSURE, PUBLICATION OR DISTRIBUTION OF THIS DOCUMENT WITHOUT PRIOR WRITTEN AUTHORIZATION FROM BARLOW ENGINEERING, LLC IS STRICTLY PROHIBITED.

COPYRIGHT BARLOW ENGINEERING, LLC AS OF THE DATE DRAWN OR REVISED.

Barlow Engineering Services, LLC.
116 Inverness Drive East
Englewood, CO
E-mail: mail@barlowproject.com
Phone: (303) 799-0240
Fax: (303) 799-1238
Web: www.barlowproject.com

BES PROJECT NO.	6015	
DESIGNED BY:	DMS	05/13/02
DRAWN BY:	DJH	05/13/02
CHECKED BY:	DPH	05/24/02
APPROVED BY:	FD.	05/28/02
SCALE:	AS NOTED	
	DO NOT SCALE THIS DRAWING. USE DIMENSIONS ONLY.	

DRAWING TITLE:
FLUE GAS DUCTWORK
FGR FAN SUCTION FROM BAGHOUSE

DRAWING NUMBER:
S040

PROJECT: HARRISONBURG RESOURCE RECOVERY FACILITY

SHEET NUMBER: 7
REV: 1

- To be cleaned

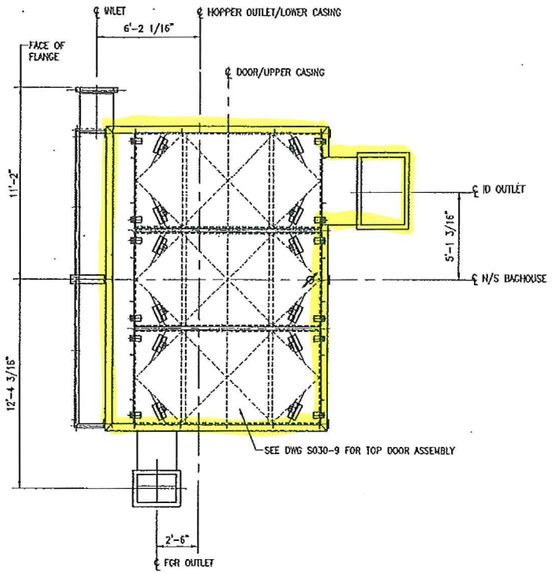

PLAN
UNIT 2 BAGHOUSE SHOWN

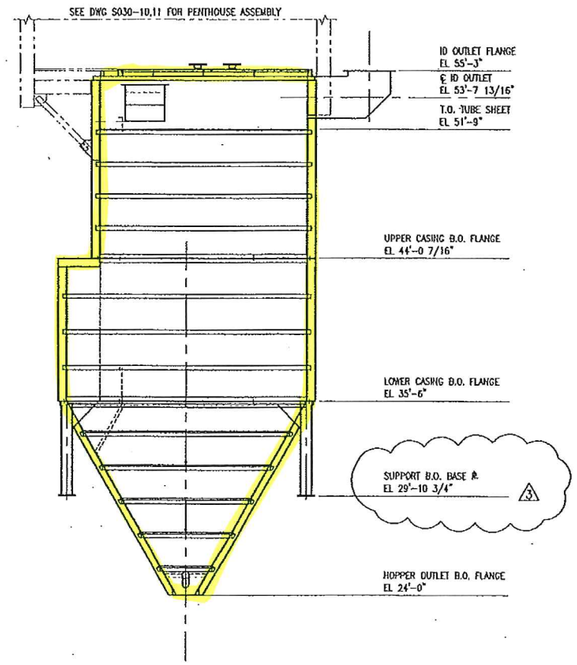

FRONT VIEW

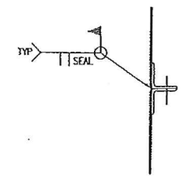

DETAIL
1 1/2" = 1'-0"

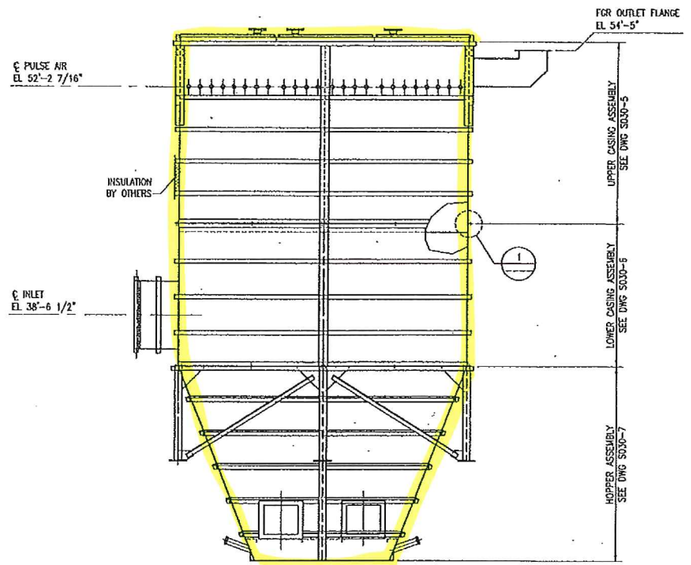

SIDE VIEW

NOTES:

1. PROVIDE TWO BAGHOUSES. ONE AS SHOWN AND ONE MIRRORED ABOUT THE CASING NORTH/SOUTH CENTERLINE. SEE DWG S030-SHT 1 FOR ORIENTATION.
2. WORK THIS DRAWING WITH DWGS S030-SHT 1 THROUGH S030-SHT 11.
3. FOR ADDITIONAL TECHNICAL REQUIREMENTS SEE SPECIFICATION SP-S210 - APC SYSTEM STRUCTURES.
4. ALL CASING SHELL PLATES TO BE 3/16" A36 UNLESS OTHERWISE NOTED.
5. ALL SHELL PLATE JOINTS SHALL BE MADE WITH FULL PENETRATION WELDS.
6. ALL CONTINUOUS WELDS SHALL BE AIR TIGHT.

REFERENCE DRAWINGS:

BARLOW ENGINEERING SERVICES

S025-SHT 1 VENTURI REACTOR
S040-SHT 1 FLUE GAS DUCT WORK GA

REV	DATE	DESCRIPTION	DWG	CHK	APP
3	11/21/02	REVISED BASEPL ELEV	[illegible]	[illegible]	[illegible]
2	10/1/02	INCORPORATE PROCEDAR COMMENTS	CTH	DWS	FEL
1	9/3/02	ADDED FOR OUTLET DUCT; ADD REF. SHT. MISC. HOPPER APPURTENANCES; ADD DETAIL 1	CTH	DWS	FEL
0	7/31/02	CERTIFIED FOR FABRICATION	DWS	CRT	JLB

THIS DOCUMENT AND THE INFORMATION IT CONTAINS ARE THE PROPERTY OF BARLOW ENGINEERING, LLC, ARE DISCLOSED IN CONFIDENCE FOR LIMITED USE AND MUST BE SURRENDERED TO BARLOW ENGINEERING, LLC ON DEMAND.

DISCLOSURE, PUBLICATION OR DISTRIBUTION OF THIS DOCUMENT WITHOUT PRIOR WRITTEN AUTHORIZATION FROM BARLOW ENGINEERING, LLC IS STRICTLY PROHIBITED.

COPYRIGHT BARLOW ENGINEERING, LLC AS OF THE DATE DRAWN OR REVISED.

Barlow Engineering Services, LLC.
316 Inverness Drive East
Englewood, CO
E-mail: mgg@barlowprojects.com
Phone: (303) 792-0248
Fax: (303) 799-1258
Web: www.barlowprojects.com

BPI PROJECT NO:	6015	
DESIGNED BY:	CTH	7/9/02
DRAWN BY:	DWS	7/9/02
CHECKED BY:	CRT	7/31/02
APPROVED BY:	JLB	7/31/02
SCALE:	1/4"=1'-0"	

DO NOT SCALE THIS DRAWING. USE DIMENSIONS ONLY.

DRAWING TITLE: BAGHOUSE PLAN & ELEVATIONS

DRAWING NUMBER: S030

PROJECT: HARRISONBURG RESOURCE RECOVERY FACILITY

SHEET NUMBER: 2 REV. 3

PROPRIETARY & CONFIDENTIAL

-To be cleared

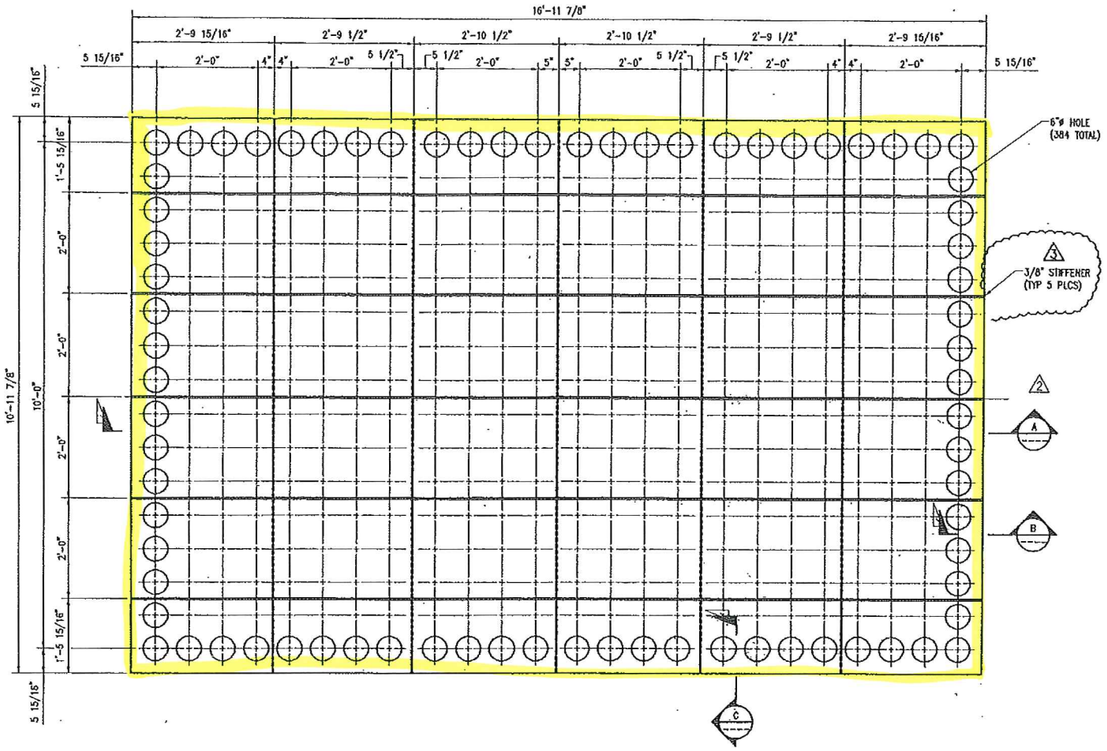

PLAN – TUBE SHEET
3/4"=1'-0"

SECTION
3/4"=1'-0"
A

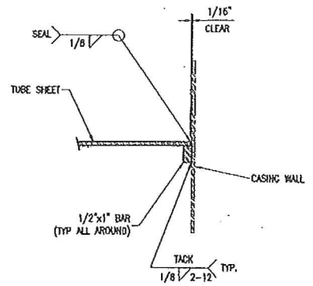

SECTION
3"=1'-0"
B

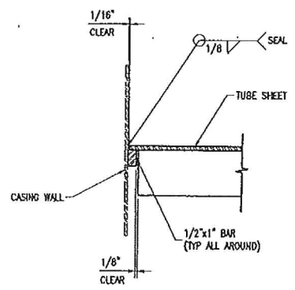

SECTION
3"=1'-0"
C

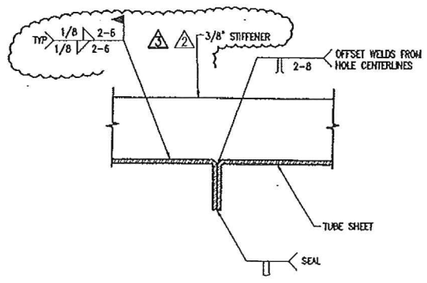

DETAIL
3"=1'-0"
1

NOTES:

1. PROVIDE TWO TUBE SHEETS AS SHOWN.
2. WORK THIS DRAWING WITH DWG S030-SHT 4.
3. FOR ADDITIONAL TECHNICAL REQUIREMENTS SEE SPECIFICATION SP-S215 – TUBE SHEET ASSEMBLIES.
4. TUBE SHEET SHALL BE FABRICATED FROM 1/4" A36 PLATE. 2
5. ALL TUBE SHEET HOLES SHALL BE LASER CUT TO ELIMINATE DISTORTION OF THE PLATE.
6. ALL CONTINUOUS WELDS SHALL BE AIR-TIGHT.

REFERENCE DRAWINGS:

BARLOW ENGINEERING SERVICES

S030-SHT 5 BAGHOUSE UPPER CASING ASSEMBLY

PROPRIETARY & CONFIDENTIAL

REV	DATE	DESCRIPTION	DWG	CHK	APP
3	10/1/02	ADDED 3/8" STIFFENER 9/27/02	DTH	DWS	PEL
2	9/19/02	INCORPORATE PROCESSOR COMMENTS MODIFIED SPECIFICATION NUMBER	DTH	DWS	PEL
1	8/8/02	ADD. 1/4" STIFFENER DIMENSIONS; REVISED WORK NUMBERS	DTH	DWS	PEL
0	7/31/02	CERTIFIED FOR FABRICATION	DWS	DRT	AJB

THIS DOCUMENT AND THE INFORMATION IT CONTAINS ARE THE PROPERTY OF BARLOW ENGINEERING, LLC. ARE DISCLOSED IN CONFIDENCE FOR LIMITED USE AND MUST BE SURRENDERED TO BARLOW ENGINEERING, LLC ON DEMAND.

DISCLOSURE, PUBLICATION OR DISTRIBUTION OF THIS DOCUMENT WITHOUT PRIOR WRITTEN AUTHORIZATION FROM BARLOW ENGINEERING, LLC IS STRICTLY PROHIBITED.

COPYRIGHT: BARLOW ENGINEERING, LLC AS OF THE DATE DRAWN OR REVISED.

Barlow Engineering Services, LLC.
114 Interocean Drive East
Englewood, CO
E-mail: mail@barlowprojects.com
Phone: (303) 792-8144
Fax: (303) 799-1311
Web: www.barlowprojects.com

BES PROJECT NO.	6015	
DRAWN BY:	DWS	7/3/02
ISSUED BY:	DWS	7/3/02
CHECKED BY:	DRT	7/31/02
APPROVED BY:	AJB	7/31/02
SCALE:	AS NOTED	
DO NOT SCALE THIS DRAWING. USE DIMENSIONS ONLY.		

DRAWING TITLE: BAGHOUSE TUBE SHEET ASSEMBLY

DRAWING NUMBER: S030

PROJECT: HARRISONBURG RESOURCE RECOVERY FACILITY

SHEET NUMBER: 3 REV. 3

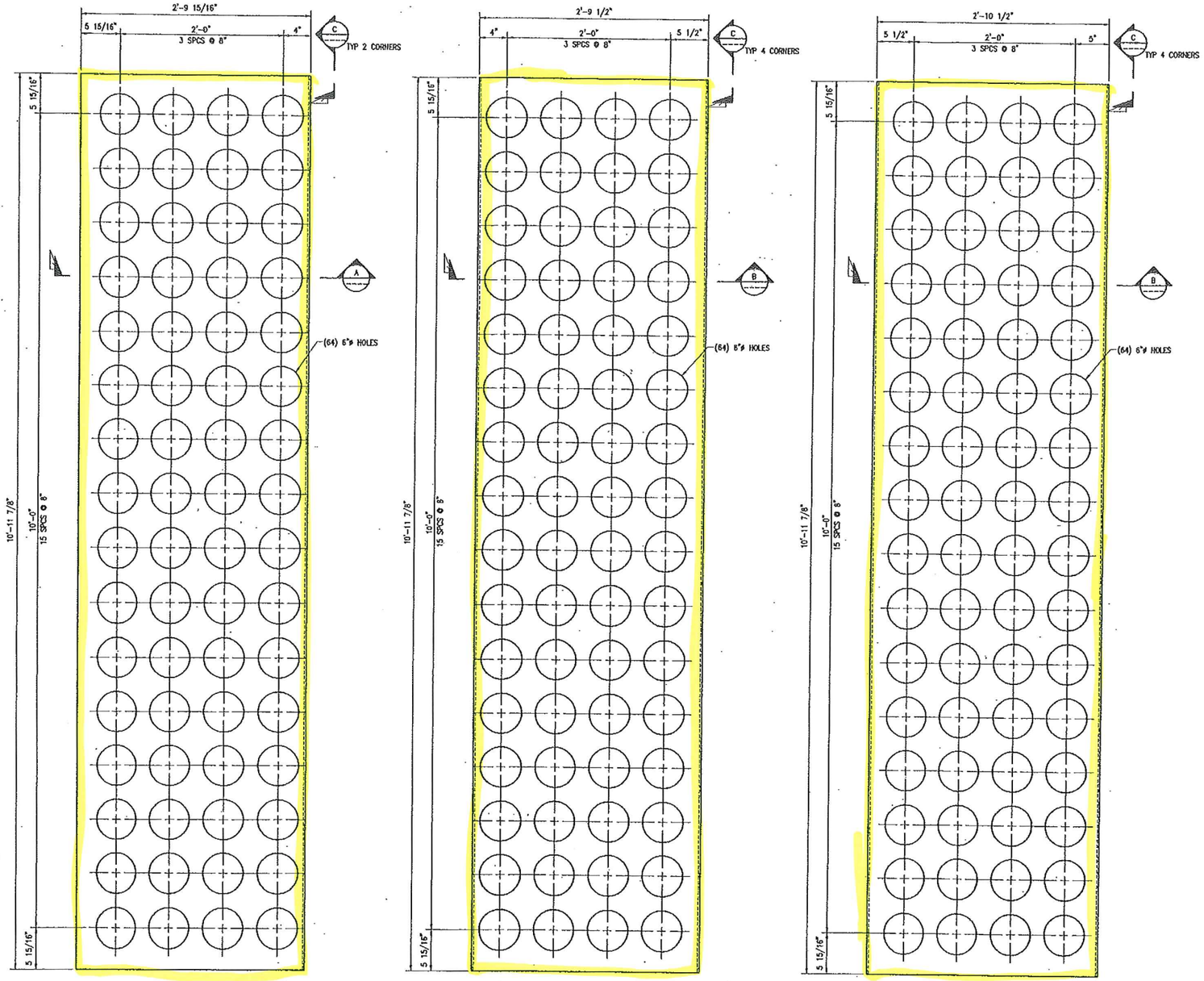

MK TS-1
1 1/2"=1'-0"

MK TS-4
1 1/2"=1'-0"
(OPP HAND)

MK TS-2
1 1/2"=1'-0"

MK TS-5
1 1/2"=1'-0"
(OPP HAND)

MK TS-3
1 1/2"=1'-0"

MK TS-6
1 1/2"=1'-0"
(OPP HAND)

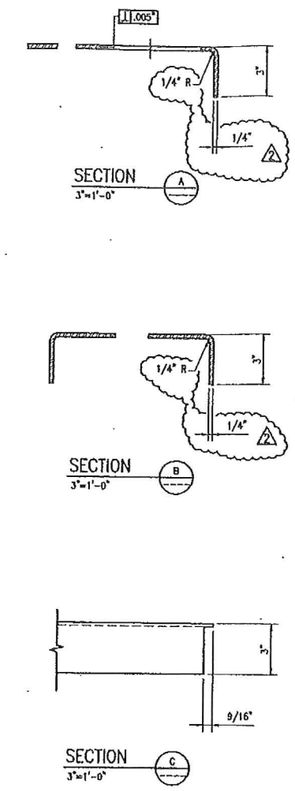

NOTES:

1. PROVIDE TWO SETS OF TUBE SHEETS AS SHOWN.
2. WORK THIS DRAWING WITH DWG S030-SHT 3.
3. FOR ADDITIONAL TECHNICAL REQUIREMENTS SEE SPECIFICATION SP-S215 – TUBE SHEET ASSEMBLIES. 2
4. TUBE SHEET SHALL BE FABRICATED FROM 1/4" A36 PLATE.
5. ALL TUBE SHEET HOLES SHALL BE LASER CUT TO ELIMINATE DISTORTION OF THE PLATE. DE-BURR ALL SHARP EDGES BEFORE ASSEMBLY.
6. TUBE SHEET HOLES SHALL BE FABRICATED TO A TOLERANCE OF -0.0 +0.010 INCH. 2

REFERENCE DRAWINGS:

BARLOW ENGINEERING SERVICES

S030-SHT 5 BAGHOUSE UPPER CASING ASSEMBLY

- To be cleaned

PROPRIETARY & CONFIDENTIAL

REV	DATE	DESCRIPTION	DWN	CHK	APP
2	9/19/02	INCORPORATE PROCEDAR COMMENTS MODIFIED SPECIFICATION NUMBER	CPH	DWS	FEL
1	09/04/02	MOD. REC. C	CPH	DWS	FEL
0	7/31/02	CLEARED FOR FABRICATION	DWS	CRT	JLB

THIS DOCUMENT AND THE INFORMATION IT CONTAINS ARE THE PROPERTY OF BARLOW ENGINEERING, LLC. ARE DISCLOSED IN CONFIDENCE FOR LIMITED USE AND MUST BE SURRENDERED TO BARLOW ENGINEERING, LLC ON DEMAND.

DISCLOSURE, PUBLICATION OR DISTRIBUTION OF THIS DOCUMENT WITHOUT PRIOR WRITTEN AUTHORIZATION FROM BARLOW ENGINEERING, LLC IS STRICTLY PROHIBITED.

COPYRIGHT BARLOW ENGINEERING, LLC AS OF THE DATE DRAWN OR REVISED.

Barlow Engineering Services, LLC.
116 Inverness Drive East
Englewood, CO
E-mail: engg@barlowprojects.com
Phone: (303) 792-0244
Fax: (303) 779-1254
Web: www.barlowprojects.com

BPI PROJECT NO.	6015	
DESIGNED BY:	DRS	7/18/02
DRAWN BY:	DWS	7/18/02
CHECKED BY:	CRT	7/31/02
APPROVED BY:	JLB	7/31/02
SCALE:	AS NOTED	

DO NOT SCALE THIS DRAWING. USE DIMENSIONS ONLY.

DRAWING TITLE: BAGHOUSE TUBE SHEET DETAILS

DRAWING NUMBER: S030

PROJECT: HARRISONBURG RESOURCE RECOVERY FACILITY

SHEET NUMBER: 4 REV: 2

PIPING AND INSTRUMENTATION DIAGRAM LEGEND

INSTRUMENT AND LABEL SYMBOLS

SYMBOL	DESCRIPTION
FF	INSTRUMENT OR CONTROL DEVICE LOCALLY MOUNTED FF INDICATES FOUNDATION FIELD BUS DEVICE * INDICATES INSTRUMENT SUPPLIED WITH EQUIPMENT
	INSTRUMENT OR CONTROL DEVICE MOUNTED IN CONTROL PANEL
	SHARED DISPLAY POINT IN CONTROL ROOM (DCS)
	LOCAL PLC

INSTRUMENT TAG NUMBER EXAMPLE

TAG NUMBER SYSTEM	DESCRIPTION
0001-0999	COMBUSTION CONTROL SYSTEMS
	0001-0099 COMBUSTION AIR
	0100-0199 PULSE AIR SYSTEM
	0200-0299 FLUE GAS SYSTEM
	0300-0399 WASTE FEED HYDRAULIC SYSTEM
1000-1999	BURNER MANAGEMENT SYSTEMS
	1000-1099 COMMON BMS ITEMS
	1100-1199 NATURAL GAS SYSTEM
	1200-1299 NO.2 FUEL OIL SYSTEM
2000-2999	MAIN WATER SYSTEMS
	2000-2099 BOILER FEED WATER SYSTEM
	2100-2199 CONDENSATE SYSTEM
	2200-2299 CONDENSATE TRANSFER SYSTEM
3000-3999	MAIN STEAM SYSTEMS
	3000-3099 MAIN STEAM HEADER
	3100-3199 BLOWDOWN SYSTEM
	3200-3299 SOOTBLOWING SYSTEM
	3300-3399 STEAM AND WATER SAMPLE SYSTEM
4000-4999	WATER TREATMENT SYSTEM
5000-5999	POLLUTION CONTROL SYSTEMS
	5000-5099 CEMS SYSTEM
	5100-5199 LIME HANDLING AND INJECTION
	5200-5299 ACTIVATED CARBON HANDLING AND INJECTION
6000-6999	ASH HANDLING SYSTEMS
	6000-6099 BOTTOM ASH SYSTEM
	6100-6199 FLY ASH SYSTEM
	6200-6299 RECYCLE FLY ASH
7000-7999	MISCELLANEOUS SYSTEMS
	7000-7099 CITY WATER SYSTEM
	7100-7199 INSTRUMENT AIR / PLANT AIR SYSTEM
	7200-7299 CHEMICAL FEED SYSTEM
	7300-7399 FIRE PROTECTION SYSTEM

INSTRUMENTATION IDENTIFICATION LETTERS

INSTRUMENT \ FUNCTION	ANALYSIS	FLOW	HAND	LEVEL	PRESSURE	TEMP.	POSITION	DIAPHRAGM	TEST	CONTROL	SOLENOID	SPEED
ALARM HIGH	AAH	FAH	—	LAH	PAH	TAH	ZAH	—	—	—	—	—
ALARM HIGH HIGH	—	—	—	LAHH	PAHH	TAHH	ZAHH	—	—	—	—	—
ALARM LOW	AAL	FAL	—	LAL	PAL	TAL	ZAL	—	—	—	—	—
ALARM LOW LOW	—	—	—	LALL	PAL	TAL	ZALL	—	—	—	—	—
CONNECTION	—	—	—	—	—	—	—	—	TC	—	—	—
CONTROLLER	AC	FC	HC	LC	PC	TC	ZC	—	—	—	—	—
CONTROLLER, INDICATING	AIC	FIC	HIC	LIC	PIC	TIC	ZIC	—	—	—	—	SIC
CONTROL VALVE	ACV	FCV	HCV	LCV	PCV	TCV	—	—	—	—	—	—
DIFFERENTIAL INDICATOR	—	—	—	—	PDI	—	—	—	—	—	—	—
DRIVE	AD	FCD	—	—	—	—	—	—	—	—	—	—
ELEMENT	—	—	—	—	—	—	—	—	—	—	—	SE
GAUGE	—	—	—	LG	—	—	—	—	—	—	—	—
INDICATOR	AI	FI	—	LI	PI	TI	ZI	—	—	—	—	—
ORIFICE	—	FO	—	—	—	—	—	—	—	—	—	—
RECORDER	AR	FR	—	LR	PR	TR	ZR	—	—	—	—	—
SENSING ELEMENT	AE	FE	—	—	—	TE	—	—	—	—	—	—
I/P SIGNAL CONVERTER	AY	FY	—	LY	—	TY	—	—	—	—	—	SY
SWITCH	AS	FS	HS	LS	PS	TS	ZS	—	—	CS	—	SS
SWITCH CLOSED	—	—	—	—	—	—	ZSC	—	—	—	—	—
SWITCH HIGH	ASH	FSH	HSH	LSH	PSH	TSH	ZSH	—	—	—	—	—
SWITCH HIGH HIGH	—	—	—	LSHH	PSHH	TSHH	ZSHH	—	—	—	—	—
SWITCH LOW	ASL	FSL	HSL	LSL	PSL	TSL	ZSL	—	—	—	—	—
SWITCH LOW LOW	—	—	—	LSLL	PSLL	TSLL	ZSLL	—	—	—	—	—
SWITCH OPEN	—	—	—	—	—	—	ZSO	—	—	—	—	—
SWITCH, INDICATING	AIS	FIS	—	LIS	PIS	TIS	ZIS	—	—	—	—	—
TOTAL INDICATOR	—	FQI	—	—	—	—	—	—	—	—	—	—
TOTALIZER	—	FQ	—	—	—	—	—	—	—	—	—	—
TOTALIZER SWITCH	—	FQS	—	—	—	—	—	—	—	—	—	—
TRANSMITTER	AT	FT	—	LT	PT	TT	ZT	—	—	—	—	SIT
TRANSMITTER, INDICATING	AIT	FIT	—	LIT	PIT	TIT	ZIT	—	—	—	—	—
VALVE	—	—	—	—	PSV	—	—	XV	XV	—	SV	—

PIPING SYMBOLS

SYMBOL	DESCRIPTION
	GATE VALVE, NORMALLY OPEN
	GATE VALVE, NORMALLY CLOSED
	NEEDLE VALVE, NORMALLY OPEN
	NEEDLE VALVE, NORMALLY CLOSED
	PLUG VALVE, NORMALLY OPEN
	PLUG VALVE NORMALLY CLOSED
	GLOBE VALVE, NORMALLY OPEN
	GLOBE VALVE, NORMALLY CLOSED
	BALL VALVE, NORMALLY OPEN
	BALL VALVE NORMALLY CLOSED
	BUTTERFLY VALVE NORMALLY OPEN
	BUTTERFLY VALVE NORMALLY CLOSED
	3-WAY VALVE
	RELIEF VALVE
	CHECK VALVE
	STOP CHECK VALVE
	FLEX CONNECTOR
	"T" TYPE STRAINER
	"Y" TYPE STRAINER
	"WITCH HAT" STRAINER
	SELF CONTAINED PRESSURE REGULATOR
	ON/OFF 1/4 TURN BALL VALVE
	CONTROL VALVE WITH I/P CONVERTER
	BUTTERFLY VALVE WITH CONTROL
	SOLENOID OPERATED VALVE
	MOTOR OPERATED VALVE
	CONTROL DAMPER
	SCREWED CAP
	WELDED CAP
V	VENT
D	DRAIN
	FLOOR DRAIN
	SIPHON
	NECKED VENT
	REDUCER, CONCENTRIC
	REDUCER, ECCENTRIC
	FLANGE
	RESTRICTION ORIFICE
	FLOW INDICATOR
	PITOT TYPE FLOW ELEMENT
	VORTEX SHEDDING FLOW METER
	BACK FLOW PREVENTER
	DOUBLE ACTING CYLINDER
	SOLENOID VALVE (3 WAY)
	SOLENOID VALVE (4 WAY)
	SOLENOID VALVE WITH MANUAL OVERIDE
	TURBINE TYPE FLOWMETER
	OVAL GEAR TYPE FLOWMETER
	EDUCTOR, EJECTOR
	KNIFE GATE

NOTES

1. WATER LINES LOCATED BELOW THE ELEVATION OF THE BUILDING AIR INTAKE LOUVERS SHALL BE INSULATED WITH 1-1/2" OF FIBERGLASS INSULATION AND PVC LAGGING AS DIRECTED BY THE SITE REPRESENTATIVE.
2. WATER LINES LOCATED OUTDOORS SHALL BE HEAT TRACED, INSULATED, AND LAGGED AS DIRECTED BY THE SITE REPRESENTATIVE.

PIPE LINE IDENTIFICATION

LINE LEGEND

LINE / SYMBOL	DESCRIPTION
— - —	SKID MOUNTED EQUIPMENT LIMITS
	NEW LINE – PRIMARY
	NEW LINE – SECONDARY
	EXISTING LINE
—//—//—	PNEUMATIC SIGNAL LINE
- - - -	ELECTRIC SIGNAL
—o—o—o—	DATA SIGNAL (SOFTWARE)
--o--o--o--	FIELD BUS SIGNAL WIRING
	OFF PAGE CONNECTOR

EQUIPMENT IDENTIFICATION

PIPE CLASS

CLASS.	MATERIAL DESCRIPTION
PVC	150# PVC
SBR	0#/VAC RUBBER
20	ALLOY 20
SST	2500# SS TUBING
CU	125# COPPER
125	125# CARBON STEEL
150	150# CARBON STEEL
150G	150# GALVANIZED STEEL
150X	150# SCH XS CARBON STEEL
151	150# Cr-Mo STEEL
150S	150# SPIRAL WOUND CARBON STEEL
300	300# CARBON STEEL
300X	300# SCH XS CARBON STEEL

INSULATION CLASS

INSULATION CLASS		OPERATING TEMPERATURE RANGE
ENERGY CONSERVATION	E5	410°-499°F
	E4	300°-410°F
	E3	200°-299°F
	E2	100°-199°F
PERSONNEL PROTECTION	P5	410°-500°F
	P4	120°-410°F
HEAT TRACED	HT	40°-150°F
	HT	151°-400°F

VALVE IDENTIFICATION

SYSTEM CODES

CODE	DESCRIPTION	CODE	DESCRIPTION
AC	ACTIVATED CARBON	IA	INSTRUMENT AIR
BA	BOTTOM ASH	LH	LIME HANDLING
BD	BOILER BLOWDOWN	N2	NITROGEN
CA	COMBUSTION AIR	NG	NATURAL GAS
CF	CHEMICAL FEED	PA	PULSE AIR
CO	CONDENSATE	SA	SERVICE AIR
CW	CITY WATER	SF	SOLID FUEL
DR	DRAINS	SS	SAMPLE SYSTEM
FA	FLY / RECYCLE ASH	ST	STEAM
FG	FLUE GAS	SW	SERVICE / CITY WATER
FP	FIRE PROTECTION	TW	TREATED WATER
FW	FEEDWATER	VT	VENTS
FO	FUEL OIL	WT	WATER TREATMENT
HO	HYDRAULIC OIL	WW	WASTE WATER

ABBREVIATIONS

CODE	DESCRIPTION	CODE	DESCRIPTION
AGR	ABOVE GROUND	LO	LOCKED OPEN
BD	BLOWDOWN	MFT	MASTER FUEL TRIP
CI	CAST IRON	MH	MAN HOLE
CO	CHAIN OPERATED	MSW	MUNICIPAL SOLID WASTE
CS	CARBON STEEL	NC	NORMALLY CLOSED
DR	DRAIN	NO	NORMALLY OPEN
FC	FAIL CLOSED	RD	RUPTURE DISC
FF	FABRIC FILTER	SC	SAMPLE CONNECTION
FL	FAIL LAST POSITION	SP	SET POINT
FO	FAIL OPEN	SS	STAINLESS STEEL
HH	HAND HOLE	ST	STORM SEWER
HP	HORSE POWER	UGR	UNDERGROUND
IA	INSTRUMENT AIR	V	VENT

EQUIPMENT CODES

CODE	DESCRIPTION	CODE	DESCRIPTION
ACT	ACTUATOR	FLT	FILTER
BLR	BOILER	FAN	FAN
BNR	BURNER	GRT	FUEL FEED GRATE
CNV	CONVEYOR	HTX	HEAT EXCHANGER
CAM	CAMERA	MAG	MAGNETIC DRUM
CEM	CONTINUOUS EMISSIONS MONITORING SYSTEM	MIX	AGITATOR
CMB	COMBUSTOR	PMP	PUMP
CPR	AIR COMPRESSOR	SCB	DRY-DRY SCRUBBER
CRN	CRANE	SIL	SILENCER
CTG	COMBUSTION TURBINE GENERATOR	SPN	SAMPLE PANEL
DCS	DISTRIBUTED CONTROL SYSTEM	SSB	ROTARY SOOT BLOWERS
DMP	DAMPER	STG	STEAM TURBINE GENERATOR
DRN	TRENCH DRAIN	STK	STACK
DRY	INSTRUMENT AIR DRYER	STR	STRAINER
ECO	ECONOMIZER	TNK	TANK
EDT	EDUCTOR	TRP	STEAM TRAPS
EXP	EXPANSION JOINT	WTR	WATER TREATMENT
FDR	FEEDER		

TIE POINT LIST

NO.	DESCRIPTION	SIZE	MSW PLANT P&ID	EXISTING P&ID
1	NOT USED	--	--	--
2	NATURAL GAS TO DUEL FUEL BURNER	2"	M810	AUX. BLR M1.10
3A	FUEL OIL SUPPLY TO DUEL FUEL BURNERS	1"	M805	AUX. BLR M1.10
3B	FUEL OIL RETURN FROM DUEL FUEL BURNERS	1"	M805	AUX. BLR M1.10
4	STEAM TO WEST CAMPUS	8"	M301	WTE M1.11
5	STEAM TO AUX BOILER PLANT	6"	M301	AUX. BLR M1.5
6A	WEST CAMPUS – PUMPED CONDENSATE RETURNS TO REFUSE PLANT	3"	M401	
6B	WEST CAMPUS – PUMPED CONDENSATE RETURNS TO AUX. BOILER PLANT	3"	M401	
7	EAST CAMPUS – PUMPED CONDENSATE	3"	M401	AUX BLR M1.4
8A	CITY WATER TO WATER SOFTENER	3"	M601	AUX BLR M1.3
8B	TREATED WATER FROM SOFTENER	3"	M601	AUX BLR M1.3
9	CITY WATER TO SAMPLE COOLERS / BLOWDOWN TANK	1"	M601	
10A	CITY WATER TO UNIT 1 DRAG CHAIN / FEED CHUTE	2"	M601	P-1
10B	CITY WATER TO UNIT 2 DRAG CHAIN / FEED CHUTE	2"	M601	P-1
11	COMPRESSED AIR TO SERVICE AIR	1.5"	M801	AUX. BLR M1.10
12	COMPRESSED AIR TO INSTRUMENT AIR	1"	M801	AUX. BLR M1.10

PROPRIETARY & CONFIDENTIAL

REV	DATE	DESCRIPTION	DWN	CHK	APP
2	02/24/04	AS BUILT	DLH		
1	07/25/03	UPDATED SYMBOLS, ABBREVIATIONS, AND TAG NUMBER SYSTEM	DLH	DHO	TEL
0	03/21/03	ISSUED FOR CONSTRUCTION	DLH	DHO	TEL

THIS DOCUMENT AND THE INFORMATION IT CONTAINS ARE THE PROPERTY OF BARLOW ENGINEERING, LLC, ARE DISCLOSED IN CONFIDENCE FOR LIMITED USE AND MUST BE SURRENDERED TO BARLOW ENGINEERING, LLC ON DEMAND.
DISCLOSURE, PUBLICATION OR DISTRIBUTION OF THIS DOCUMENT WITHOUT PRIOR WRITTEN AUTHORIZATION FROM BARLOW ENGINEERING, LLC IS STRICTLY PROHIBITED.
COPYRIGHT BARLOW ENGINEERING, LLC AS OF THE DATE DRAWN OR REVISED.

Barlow Engineering Services, LLC
Englewood, CO
Phone: (303) 792-0248
Fax: (303) 799-1258

BEI PROJECT NO:	6390	
DESIGNED BY:	DHO	03/21/03
DRAWN BY:	CLR	03/21/03
CHECKED BY:	JK	03/21/03
APPROVED BY:	TEL	03/21/03
SCALE:	N.T.S.	

DO NOT SCALE THE DRAWING, USE DIMENSIONS ONLY.

DRAWING TITLE: P&ID LEGEND

PROJECT: HARRISBURG MATERIALS, ENERGY, RECYCLING AND RECOVERY FACILITY

DRAWING NUMBER: M002

SHEET NUMBER: 1 REV: 2

- To be cleaned

- Specific cleaning / demolition / removal requirements (See project documents)

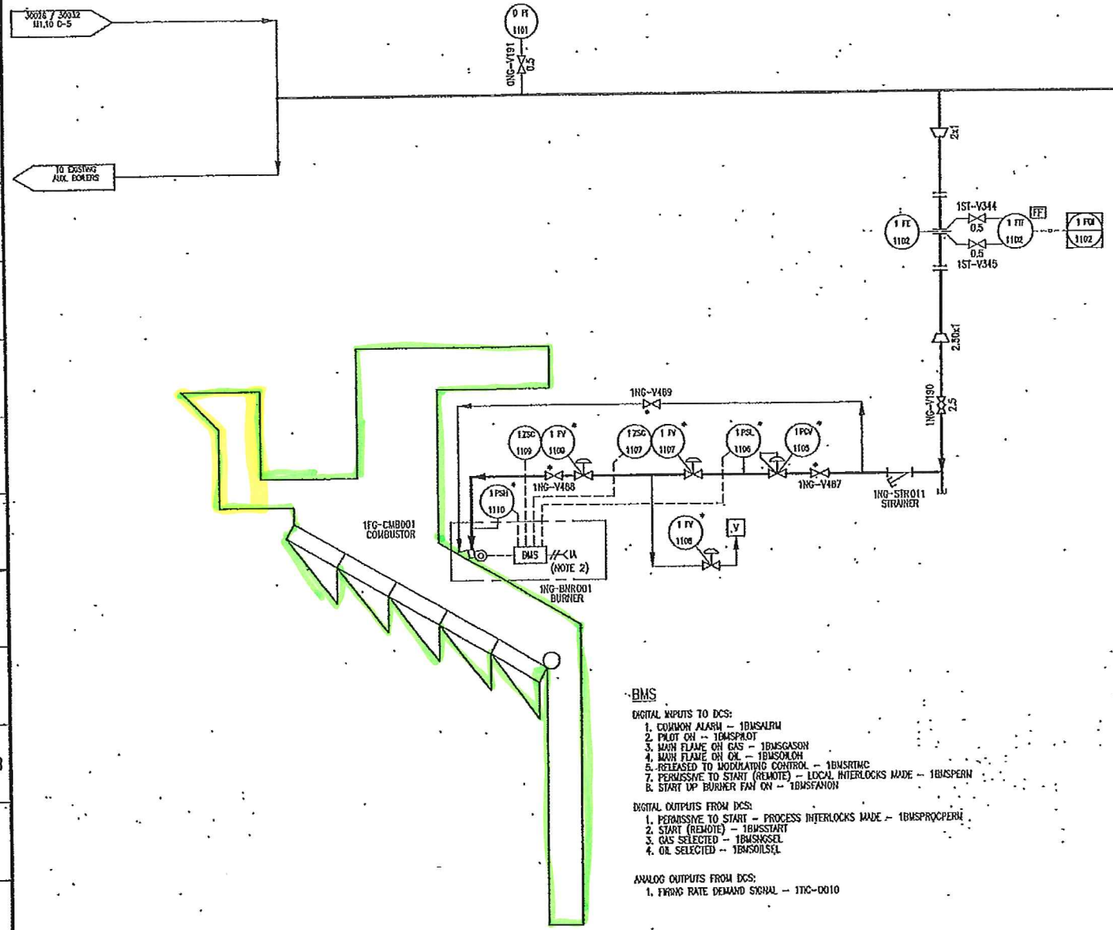

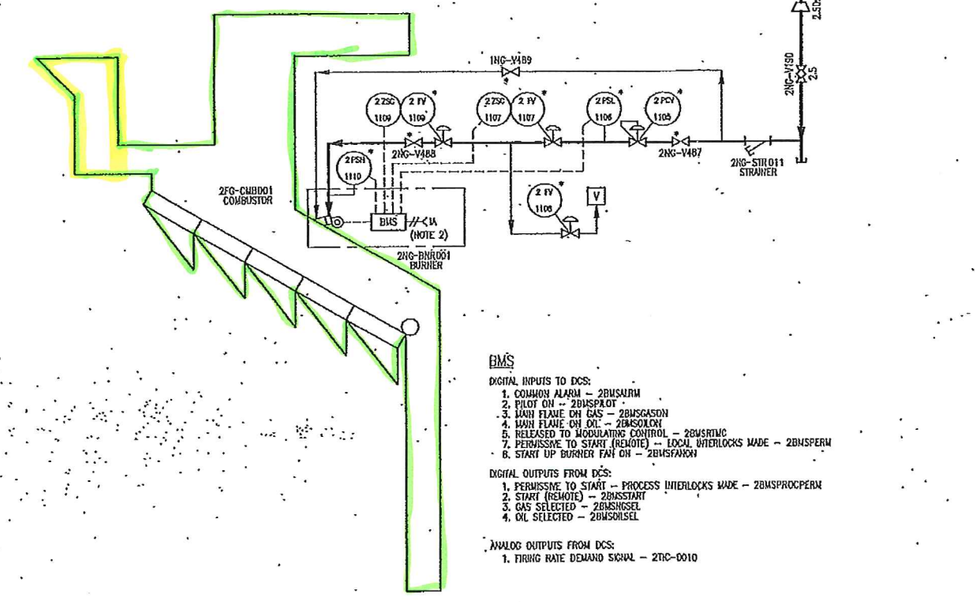

BMS

DIGITAL INPUTS TO DCS:
1. COMMON ALARM – 1BMSALRM
2. PILOT ON – 1BMSPILOT
3. MAIN FLAME ON GAS – 1BMSGASON
4. MAIN FLAME ON OIL – 1BMSOILON
5. RELEASED TO MODULATING CONTROL – 1BMSRTMC
6. PERMISSIVE TO START (REMOTE) – LOCAL INTERLOCKS MADE – 1BMSPERM
7. START UP BURNER FAN ON – 1BMSFANON

DIGITAL OUTPUTS FROM DCS:
1. PERMISSIVE TO START – PROCESS INTERLOCKS MADE – 1BMSPROCPERM
2. START (REMOTE) – 1BMSSTART
3. GAS SELECTED – 1BMSNGSEL
4. OIL SELECTED – 1BMSOILSEL

ANALOG OUTPUTS FROM DCS:
1. FIRING RATE DEMAND SIGNAL – 1TIC-0010

BMS

DIGITAL INPUTS TO DCS:
1. COMMON ALARM – 2BMSALRM
2. PILOT ON – 2BMSPILOT
3. MAIN FLAME ON GAS – 2BMSGASON
4. MAIN FLAME ON OIL – 2BMSOILON
5. RELEASED TO MODULATING CONTROL – 2BMSRTMC
6. PERMISSIVE TO START (REMOTE) – LOCAL INTERLOCKS MADE – 2BMSPERM
7. START UP BURNER FAN ON – 2BMSFANON

DIGITAL OUTPUTS FROM DCS:
1. PERMISSIVE TO START – PROCESS INTERLOCKS MADE – 2BMSPROCPERM
2. START (REMOTE) – 2BMSSTART
3. GAS SELECTED – 2BMSNGSEL
4. OIL SELECTED – 2BMSOILSEL

ANALOG OUTPUTS FROM DCS:
1. FIRING RATE DEMAND SIGNAL – 2TIC-0010

NOTES
1. UNLESS OTHERWISE NOTED IN THE CONTRACT DOCUMENTS ALL NEW EQUIPMENT, PIPING, VALVES, INSTRUMENTATION, AND MISC. APPURTENANCES TO BE FURNISHED AND INSTALLED BY THE CONTRACTOR. ALL GENERAL CONTRACTOR FURNISHED EQUIPMENT TO BE INSTALLED BY CONTRACTOR.
2. SEE M805 FOR INSTRUMENT AIR CONNECTION.

PROPRIETARY & CONFIDENTIAL

REV	DATE	DESCRIPTION	DRC	CHK	APP
2	02/21/03	AS BUILT	DJH		
1	07/22/02	DEL. BASEMAP, ADDED BACKMAN, REA AT 11116	DJH	DHB	MJL
0	03/24/03	ISSUED FOR CONSTRUCTION	DJH	DHB	MJL

THIS DOCUMENT AND THE INFORMATION IT CONTAINS ARE THE PROPERTY OF BARLOW ENGINEERING, LLC, ARE DISCLOSED IN CONFIDENCE FOR LIMITED USE AND MUST BE SURRENDERED TO BARLOW ENGINEERING, LLC ON DEMAND.

DISCLOSURE, PUBLICATION OR DISTRIBUTION OF THIS DOCUMENT WITHOUT PRIOR WRITTEN AUTHORIZATION FROM BARLOW ENGINEERING, LLC IS STRICTLY PROHIBITED.

COPYRIGHT BARLOW ENGINEERING, LLC AS OF THE DATE SHOWN OR REVISED.

Barlow Engineering Services, LLC.
116 Inverness Drive East
Englewood, CO
E-mail: mail@barlowprojects.com
Phone: (303) 792-0218
Fax: (303) 799-1218
Web: www.barlowprojects.com

BES PROJECT NO:	6015
DESIGNED BY:	DHB — 03/21/03
DRAWN BY:	DJH — 03/24/03
CHECKED BY:	MJL — 03/24/03
APPROVED BY:	TD. — 03/24/03
SCALE:	N.T.S.

DO NOT SCALE THIS DRAWING. USE DIMENSIONS ONLY.

DRAWING TITLE: NATURAL GAS PIPING & INSTRUMENTATION DIAGRAM

DRAWING NUMBER: M810

PROJECT: HARRISONBURG RESOURCE RECOVERY FACILITY

SHEET NUMBER: 1 OF 2

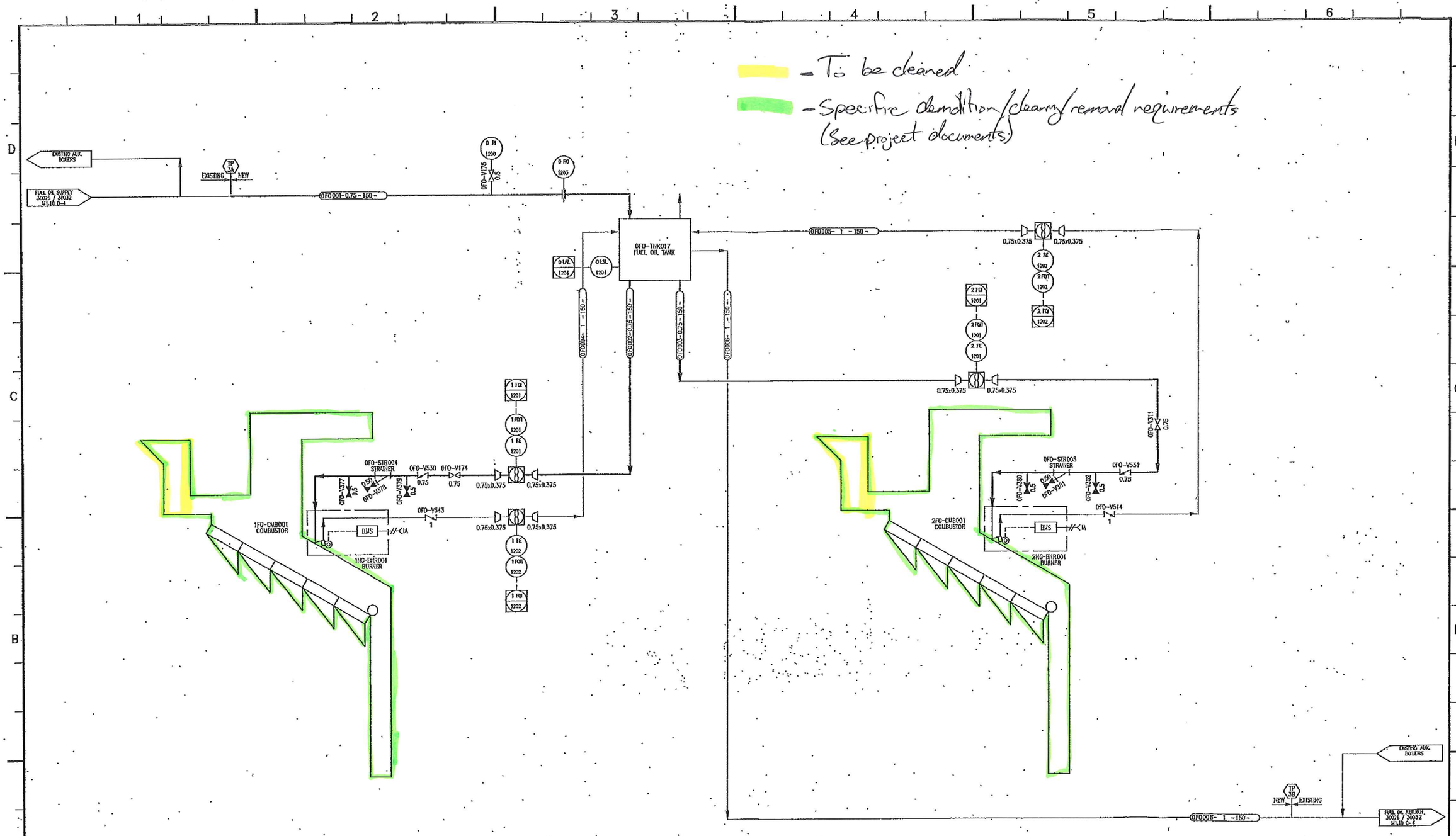

NOTES

1. UNLESS OTHERWISE NOTED IN THE CONTRACT DOCUMENTS ALL NEW EQUIPMENT, PIPING, VALVES, INSTRUMENTATION, AND MISC. APPURTENANCES TO BE FURNISHED AND INSTALLED BY THE CONTRACTOR. ALL GENERAL CONTRACTOR FURNISHED EQUIPMENT TO BE INSTALLED BY CONTRACTOR.

REV	DATE	DESCRIPTION	DWG	CHK	APP
2	02/26/03	AS BUILT	DLH		
1	07/23/03	CHNG. F0001-008	DLH	DWG	FEL
0	03/21/03	ISSUED FOR CONSTRUCTION	DLH	DWG	FEL

THIS DOCUMENT AND THE INFORMATION IT CONTAINS ARE THE PROPERTY OF BARLOW ENGINEERING, LLC, ARE DISCLOSED IN CONFIDENCE FOR LIMITED USE AND MUST BE SURRENDERED TO BARLOW ENGINEERING, LLC ON DEMAND.

DISCLOSURE, PUBLICATION OR DISTRIBUTION OF THIS DOCUMENT WITHOUT PRIOR WRITTEN AUTHORIZATION FROM BARLOW ENGINEERING, LLC IS STRICTLY PROHIBITED.

COPYRIGHT BARLOW ENGINEERING, LLC AS OF THE DATE DRAWN OR REVISED.

Barlow Engineering Services, LLC.
314 Inverness Drive East
Englewood, CO
E-mail: mgg@barlowpojects.com
Phone: (303) 792-0218
Fax: (303) 799-1258
Web: www.barlowpojects.com

BY PROJECT NO.	5015	
DESIGNED BY:	DPD	03/21/03
DRAWN BY:	DLH	03/21/03
CHECKED BY:	AK	03/21/03
APPROVED BY:	FEL	03/21/03
SCALE:	N.T.S.	

DO NOT SCALE THIS DRAWING. USE DIMENSIONS ONLY.

DRAWING TITLE: FUEL OIL PIPING & INSTRUMENTATION DIAGRAM

DRAWING NUMBER: M805

PROJECT: HARRISONBURG RESOURCE RECOVERY FACILITY

SHEET NUMBER: 1 REV: 2

PROPRIETARY & CONFIDENTIAL

MESCO COLUMN LINE DESIGNATION
BARLOW ENGINEERING SERVICES COLUMN LINE DESIGNATION

1 (K) 2 (H) 3 (G) 4 (D) 5 (C) A (6)

108'-0"
6" 23'-6" 20'-4" 20'-4" 20'-4" 23'-6" 6"

EXISTING BUILDING / NEW ADDITION

D F002-2 (SIM) (OPP. HAND)

ISOLATION JT. (TYP @ EXIST. FDTN.)

1'-3" 1'-3" 1'-0" (TYP)

B F002-2

REMOVE EXIST. SLAB

REMOVE EXIST. FDTNS. @ A, K, & 1A LINES

REMOVE EXIST. PIT AND CONC. PAD

EXIST. FDTNS. NOT SHOWN FOR CLARITY

(TYP 2 PLCS) THIS WALL

4 F002-2

2 F002-2

EXIST. FDTNS. NOT SHOWN FOR CLARITY

1'-6"

C F002-2

25'-0" 23'-6" 21'-6" 24'-4 1/8"

2 F002-2 (SIM)

CONST. JT. (TYP) (SEE NOTE 6)

T.O.C. 19'-10" (T.O. FIN. FLR. 20'-0")

8" CONC. SLAB W/#5 @ 9" E.W. @ MID-DEPTH & 2" SURFACE HARDENER (NOTE 8)

SEE C F002-2 (SIM)

D F002-2

1 D

1A A

1B B

1C A

25'-0" 7'1"-6" 25'-0" 21'-6"

B F002-2

1'-3" 1'-0" (TYP)

4'-6 3/4" 13'-3" 22'-0" 21'-0" 14'-6 9/16" 2'-0"

C F002-2

1 F002-2 (SIM)

B F002-2

2'-0" (TYP) 1'-0" 2'-0"

1 F002-2 (TYP 3 PLCS) THIS WALL

3 F002-2

A F002-2

5 F002-2 FDTN. CORNER BAR SIM @ 45° CORNERS

23'-8" 4"

FOUNDATION PLAN
3/16"=1'-0"

NOTES:

1. FOR GENERAL CONCRETE NOTES AND STANDARD DETAILS, SEE DWG. F100-1.
2. WORK THIS DRAWING WITH DWG. F002-2.
3. CONCRETE MIX FOR FOOTINGS & WALLS SHALL BE TYPE A WITH A MINIMUM COMPRESSIVE STRENGTH OF 3,500 PSI AT 28 DAYS.
4. CONTRACTOR SHALL VERIFY THAT ALL UNDERGROUND MECHANICAL AND ELECTRICAL ITEMS ARE IN PLACE PRIOR TO CONCRETE PLACEMENT.
5. FOR ADDITIONAL TECHNICAL REQUIREMENTS SEE SPECIFICATIONS SP-F100 - CONCRETE AND SP-F110 - REINFORCING STEEL.
6. PLACE CONCRETE SLAB WITH A CHECKERBOARD PATTERN ALLOWING 7 DAYS CURE TIME BETWEEN ADJACENT POURS.
7. CONCRETE FOR SLABS SHALL BE TYPE B WITH A MINIMUM COMPRESSIVE STRENGTH OF 5,000 PSI AT 28 DAYS.
8. SURFACE HARDENER SHALL BE MASTER-PLATE ANVIL TOP 300 OR EUCLID SUPER EUCO-TOP.
9. CONTRACTOR SHALL VERIFY ALL ANCHOR BOLT SIZES AND LOCATIONS AND DOOR OPENING LOCATIONS WITH PRE-ENGINEERED ENCLOSURE VENDOR. (1)

REFERENCE DRAWINGS:

MESCO
A1 ANCHOR BOLT LAYOUT

COMMONWEALTH OF VIRGINIA
DANIEL W. SECORA
No. 38033
PROFESSIONAL ENGINEER
2-11-05

REV	DATE	DESCRIPTION	DWG	CHK	APP
1	2-11-05	INCREASED FOOTING/SLAB THICKNESS AT ENCLOSURE BY 11"-0"	SSA	DWS	MJL
0	6/13/04	ISSUED FOR CONSTRUCTION	SSA	DWS	MJL

THIS DOCUMENT AND THE INFORMATION IT CONTAINS ARE THE PROPERTY OF BARLOW ENGINEERING, LLC. ARE DISCLOSED IN CONFIDENCE FOR LIMITED USE AND MUST BE SURRENDERED TO BARLOW ENGINEERING, LLC ON DEMAND.

DISCLOSURE, PUBLICATION OR DISTRIBUTION OF THIS DOCUMENT WITHOUT PRIOR WRITTEN AUTHORIZATION FROM BARLOW ENGINEERING, LLC IS STRICTLY PROHIBITED.

COPYRIGHT BARLOW ENGINEERING, LLC AS OF THE DATE DRAWN OR REVISED.

Barlow Engineering Services, LLC.
116 Burnsone Drive East
Englewood, CO
Email: mjl@barlowpe.com
Phone: (303) 792-8348
Fax: (303) 799-3316
Web: www.barlowpe.com

BPE PROJECT NO: 6015

DESIGNED BY:	DWS	11/1/03
DRAWN BY:	LMT	11/1/03
CHECKED BY:	DWS	11/03/03
APPROVED BY:	MJL	11/03/03

SCALE: AS NOTED
DO NOT SCALE THIS DRAWING, USE DIMENSIONS ONLY.

DRAWING TITLE: TIPPING FLOOR AREA FOUNDATION PLAN

DRAWING NUMBER: F002

PROJECT: HARRISONBURG RESOURCE RECOVERY FACILITY

SHEET NUMBER: 1 REV: 1

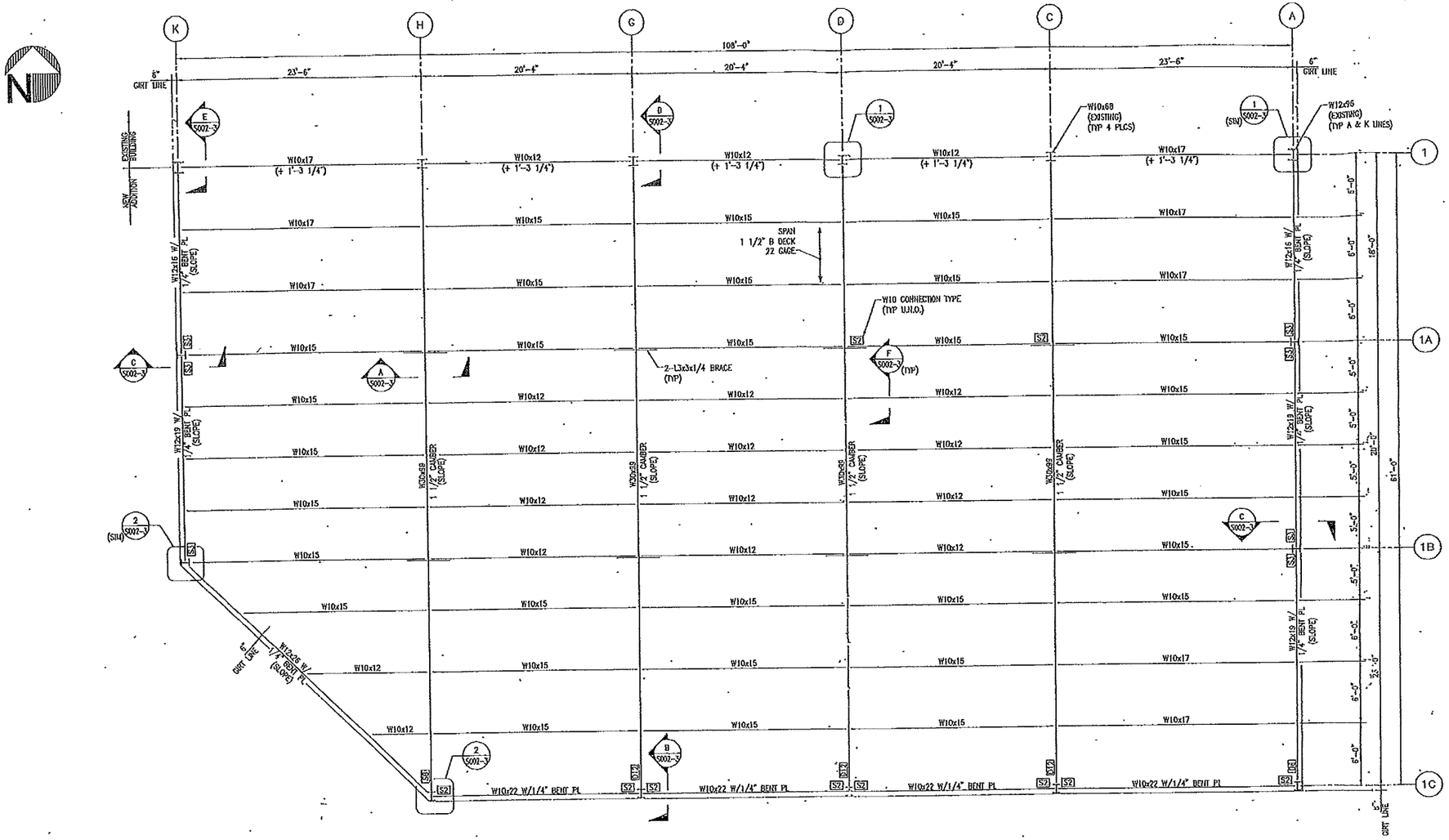

ROOF FRAMING PLAN – T.O.S. EL 43'-3"
3/16"=1'-0"

NOTES:

1. FOR GENERAL NOTES AND STANDARD DETAILS, SEE DRAWING S100-SHT 1.
2. WORK THIS DRAWING WITH DWG S002-SHT 2 AND S002-SHT 3.
3. FOR ADDITIONAL TECHNICAL REQUIREMENTS SEE SPECIFICATIONS SP-S100 – STRUCTURAL STEEL AND SP-110 – STEEL ERECTION.
4. ROOF DECK SHALL BE WELDED TO FRAMING MEMBERS USING 5/8" ø PUDDLE WELDS ON A 36/3 PATTERN WITH 2 #10 TEK SCREW SIDE LAP FASTENERS PER SPAN.
5. DECK SHALL BE WELDED TO PERIMETER BEAMS ALONG A, K, 1, 1C, AND THE SKEWED W12x26 USING 5/8" ø PUDDLE WELDS AT 12" C.C.
6. ROOF DESIGN BASED ON THE FOLLOWING LOADING:
   DEAD – 10 PSF
   SNOW – 30 PSF W/ INCREASE FOR DRIFTING
   WIND UPLIFT – 23 PSF @ BEAMS
   19 PSF @ GIRDERS
7. FOR STANDARD CONNECTION DETAILS NOTED SIMILAR TO [S2] SEE DWG S100-SHT 1.

REFERENCE DRAWINGS:

BARLOW ENGINEERING SERVICES

F002-SHT 1 TIPPING FLOOR AREA FOUNDATIONS

WILLIAM F. COSULICH ASSOCIATES, P.C.

S-9 1-LINE ELEVATION
S-17 COLUMN SCHEDULE

REV	DATE	DESCRIPTION	DWG	CHK	APP
A	11/15/02	ISSUED FOR BIDS			

THIS DOCUMENT AND THE INFORMATION IT CONTAINS ARE THE PROPERTY OF BARLOW ENGINEERING, LLC, ARE DISCLOSED IN CONFIDENCE FOR LIMITED USE AND MUST BE SURRENDERED TO BARLOW ENGINEERING, LLC ON DEMAND.

DISCLOSURE, PUBLICATION OR DISTRIBUTION OF THIS DOCUMENT WITHOUT PRIOR WRITTEN AUTHORIZATION FROM BARLOW ENGINEERING, LLC IS STRICTLY PROHIBITED.

COPYRIGHT BARLOW ENGINEERING, LLC AS OF THE DATE DRAWN OR REVISED.

Barlow Engineering Services, LLC.
116 Inverness Drive East
Englewood, CO
E-mail: eng@barlowengineering.com
Phone: (303) 792-0244
Fax: (303) 799-1233
Web: www.barlowengineering.com

BY PROJECT NO:	6015	
DESIGNED BY:	DWS	5/24/02
DRAWN BY:	DWS	5/24/02
CHECKED BY:	GTH	11/15/02
APPROVED BY:	TEL	11/15/02
SCALE:	3/16"=1'0"	

DO NOT SCALE THIS DRAWING. USE DIMENSIONS ONLY.

DRAWING TITLE: TIPPING FLOOR AREA ROOF FRAMING PLAN

DRAWING NUMBER: S002

PROJECT: HARRISONBURG RESOURCE RECOVERY FACILITY

SHEET NUMBER: 1 REV: A

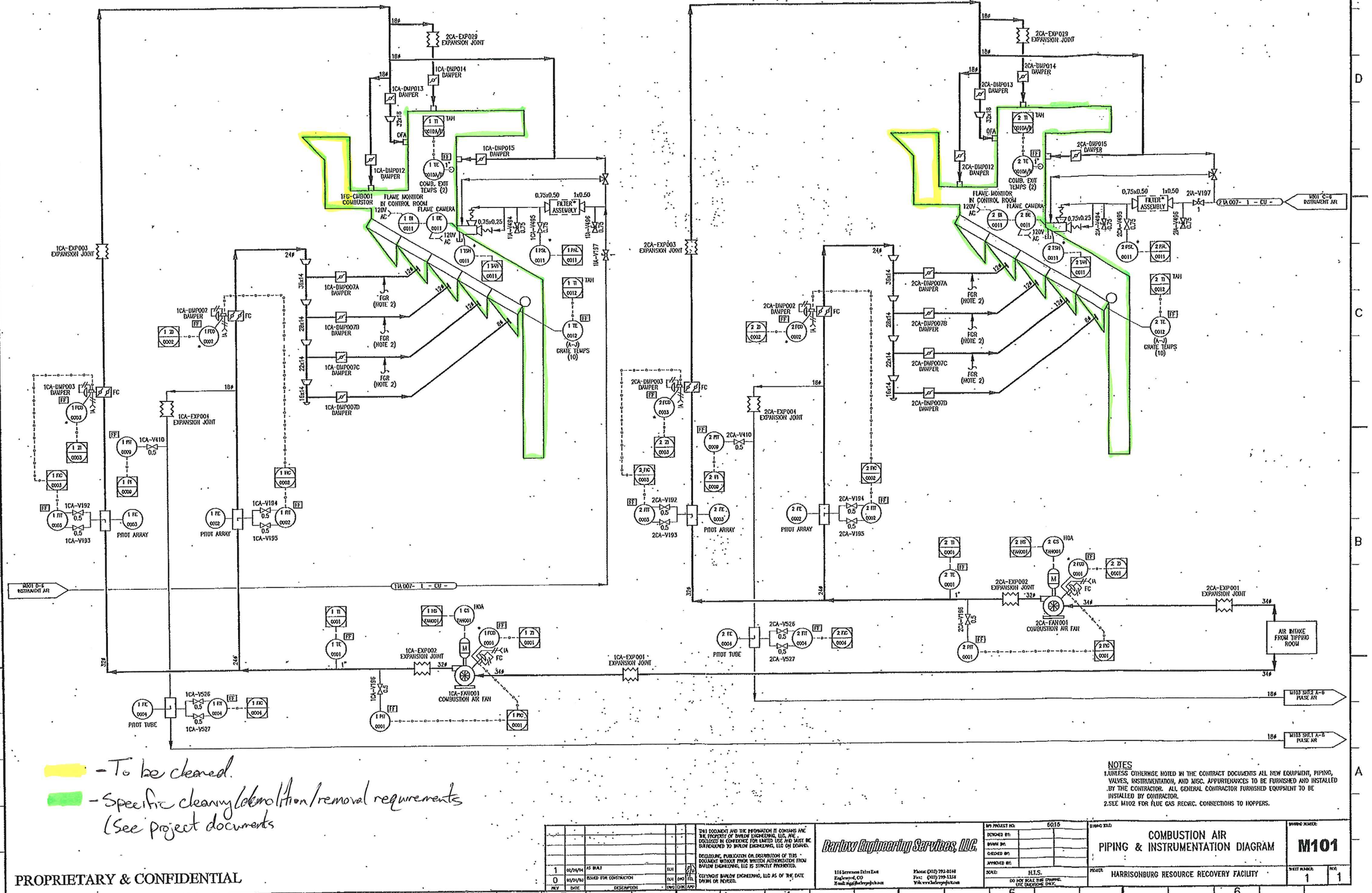

- To be cleaned.
- Specific cleaning/demolition/removal requirements (See project documents

PROPRIETARY & CONFIDENTIAL

NOTES
1. UNLESS OTHERWISE NOTED IN THE CONTRACT DOCUMENTS ALL NEW EQUIPMENT, PIPING, VALVES, INSTRUMENTATION, AND MISC. APPURTENANCES TO BE FURNISHED AND INSTALLED BY THE CONTRACTOR. ALL GENERAL CONTRACTOR FURNISHED EQUIPMENT TO BE INSTALLED BY CONTRACTOR.
2. SEE M102 FOR FLUE GAS RECIRC. CONNECTIONS TO HOPPERS.

REV	DATE	DESCRIPTION	DRG	CHK	APP
1	02/24/04	AS BUILT	DLH		
0	02/21/03	ISSUED FOR CONSTRUCTION	DLH	DWD	TDL

THIS DOCUMENT AND THE INFORMATION IT CONTAINS ARE THE PROPERTY OF BARLOW ENGINEERING, LLC. ARE DISCLOSED IN CONFIDENCE FOR LIMITED USE AND MUST BE SURRENDERED TO BARLOW ENGINEERING, LLC ON DEMAND.
DISCLOSURE, PUBLICATION OR DISTRIBUTION OF THIS DOCUMENT WITHOUT PRIOR WRITTEN AUTHORIZATION FROM BARLOW ENGINEERING, LLC IS STRICTLY PROHIBITED.
COPYRIGHT BARLOW ENGINEERING, LLC AS OF THE DATE DATED OR POSTED.

Barlow Engineering Services, LLC.
116 Inverness Drive East
Englewood, CO
E-mail: tgd@barlowprojects.com
Phone: (303) 792-0148
Fax: (303) 799-1338
Web: www.barlowprojects.com

BES PROJECT NO: 5015
DESIGNED BY:
DRAWN BY:
CHECKED BY:
APPROVED BY:
SCALE: N.T.S.
DO NOT SCALE THIS DRAWING. USE DIMENSIONS ONLY.

DRAWING TITLE: COMBUSTION AIR PIPING & INSTRUMENTATION DIAGRAM

PROJECT: HARRISONBURG RESOURCE RECOVERY FACILITY

DRAWING NUMBER: M101

SHEET NUMBER: 1 REV: 1

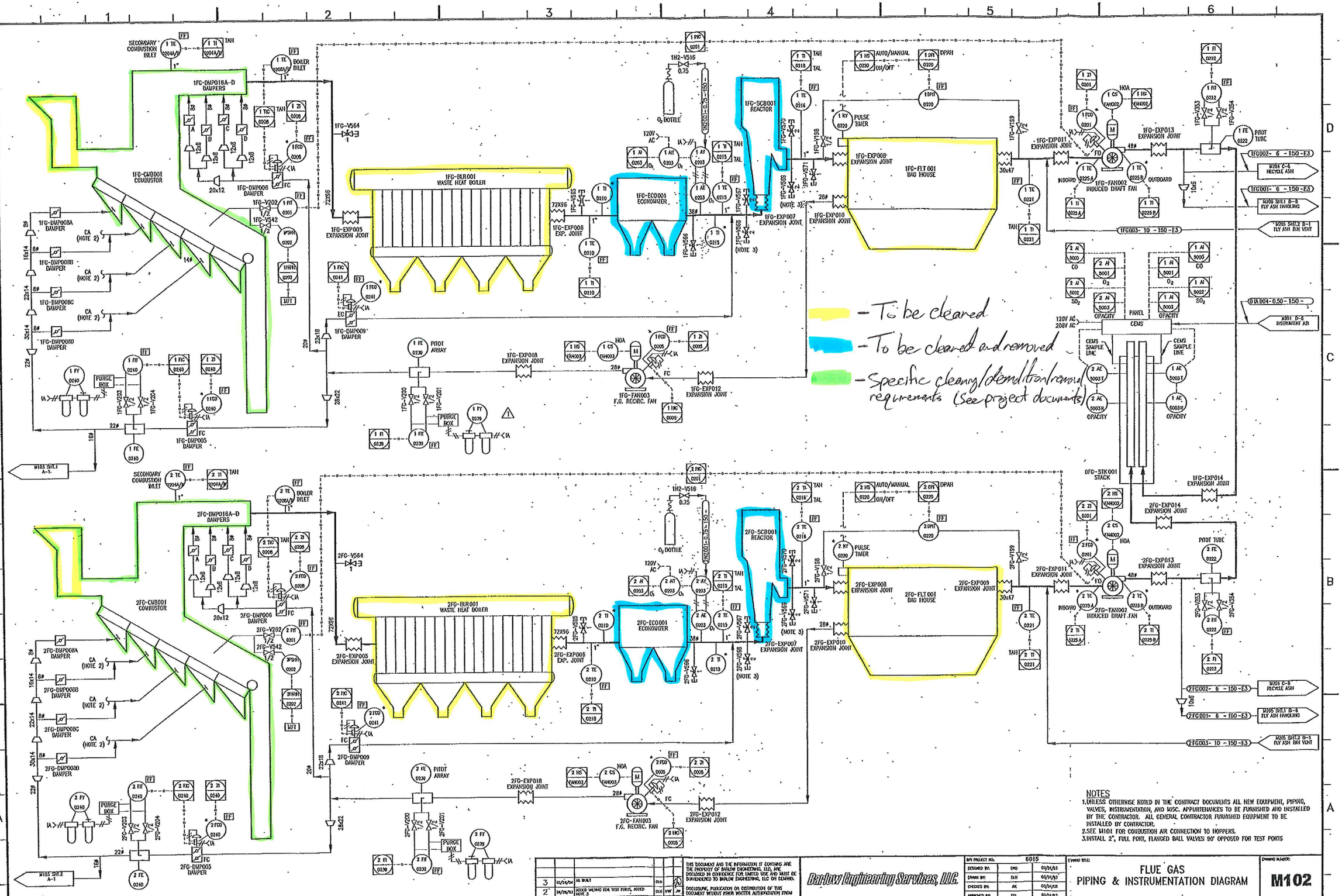

NOTES

1. UNLESS OTHERWISE NOTED IN THE CONTRACT DOCUMENTS ALL NEW EQUIPMENT, PIPING, VALVES, INSTRUMENTATION, AND MISC. APPURTENANCES TO BE FURNISHED AND INSTALLED BY THE CONTRACTOR. ALL GENERAL CONTRACTOR FURNISHED EQUIPMENT TO BE INSTALLED BY CONTRACTOR.
2. SEE M101 FOR COMBUSTION AIR CONNECTION TO HOPPERS.
3. INSTALL 2", FULL PORT, FLANGED BALL VALVES 90° OPPOSED FOR TEST PORTS

REV	DATE	DESCRIPTION	DWG	CHK	APP
3	03/24/03	AS BUILT	DLH		
2	08/28/03	ADDED VALVING FOR TEST PORTS, ADDED NOTE 3	DLH	WW	AK
1	01/31/03	MODIFIED FROM30/0240, ADDED M102B3 AND M102B4	DLH	DMD	FEL
0	01/24/03	ISSUED FOR CONSTRUCTION	DWG	DMD	FEL

THIS DOCUMENT AND THE INFORMATION IT CONTAINS ARE THE PROPERTY OF BARLOW ENGINEERING, LLC. ARE DISCLOSED IN CONFIDENCE FOR LIMITED USE AND MUST BE SURRENDERED TO BARLOW ENGINEERING, LLC ON DEMAND.
DISCLOSING, PUBLICATION OR DISTRIBUTION OF THIS DOCUMENT WITHOUT PRIOR WRITTEN AUTHORIZATION FROM BARLOW ENGINEERING, LLC IS STRICTLY PROHIBITED.
COPYRIGHT BARLOW ENGINEERING, LLC AS OF THE DATE DRAWN OR REVISED.

Barlow Engineering Services, LLC.
116 Inverness Drive East
Englewood, CO
E-mail: mail@barlowprojects.com
Phone: (303) 792-0048
Fax: (303) 799-1518
Web: www.barlowprojects.com

BES PROJECT NO.: 6015

DESIGNED BY:	DMD	01/24/03
DRAWN BY:	DLH	03/24/03
CHECKED BY:	AK	03/24/03
APPROVED BY:	FEL	03/24/03

SCALE: N.T.S.

DO NOT SCALE THIS DRAWING. USE DIMENSIONS ONLY.

DRAWING TITLE: FLUE GAS PIPING & INSTRUMENTATION DIAGRAM

DRAWING NUMBER: M102

PROJECT: HARRISONBURG RESOURCE RECOVERY FACILITY

SHEET NUMBER: 1 NO. 3

PROPRIETARY & CONFIDENTIAL

1FG-FLT 001
BAG HOUSE

1FA-HTX008
HOPPER HEATERS
(NOTE 3)

1FA-CNV002
BAGHOUSE DISCHARGE
SCREW CONVEYOR

1FA-EXP020
EXP. JOINT

1FA-CNV004
BAG HOUSE WASTE
ASH SCREW CONVEYOR

1FA-FDR018
ROTARY VALVE

1FA-CNV007
BAG HOUSE ASH TRANSFER
SCREW CONVEYOR

1FG-ECO001
ECONOMIZER

1FA-FDR013
ROTARY VALVE

1FA-FDR006
ROTARY VALVE

1FA-CNV008
ECONOMIZER SCREW
CONVEYOR

1FG-BCR001
WASTE HEAT BOILER

1FA-FDR007A
ROTARY VALVE

1FA-FDR007B
ROTARY VALVE

1FA-FDR007C
ROTARY VALVE

1FA-FDR007D
ROTARY VALVE

1FA-CNV003
BOILER SCREW
CONVEYOR

2FA-FDR015
DIVERTER
(NOTE 4)

1FA-FLT007
ROTARY VALVE
SURGE HOPPER

1FA-FDR008
ROTARY VALVE

1FA-EXP026
EXP. JOINT
(NOTE 5)

6" PIPE-BY VENDOR
(NOTE 2)

TO ASH
STORAGE
SILO

TO ASH
RECYCLE

0FA-FAN008
FLY ASH
BLOWER

0FA-SIL 001B
SILENCER

0FA-SIL 001A
SILENCER

0FA-HTX009
FLY ASH BLOWER
INLET COOLER

0FA-FLT006
INLET FILTER

0FG-EXP023
EXP. JOINT

4" PIPE-BY VENDOR
(NOTE 2)

-To be cleared

-To be cleared and removed

NOTES
1. UNLESS OTHERWISE NOTED IN THE CONTRACT DOCUMENTS ALL NEW EQUIPMENT, PIPING, VALVES, INSTRUMENTATION, AND MISC. APPURTENANCES TO BE FURNISHED AND INSTALLED BY THE CONTRACTOR. ALL GENERAL CONTRACTOR FURNISHED EQUIPMENT TO BE INSTALLED BY CONTRACTOR.
2. INSULATE VENDOR SUPPLIED PIPE TO BES SPECIFICATION E3.
3. HOPPER HEATERS ARE CHROMALOX MODEL DT-4813 OR EQUAL, QTY 10 PER BAGHOUSE.
4. INSTALL DIVERTER SUCH THAT FLY ASH IS DIVERTED TO RECYCLE ASH SYSTEM IN THE DE-ENERGIZED STATE.
5. EXPANSION JOINT FRENZELIT STYLE 1.022 VITON CLAMP ON OR EQUIVALENT.

REV	DATE	DESCRIPTION	DRN	CHK	APP
2	02/21/03	AS BUILT	DJH		
1	01/21/03	ADDED EXPANSION SEAL TO PRITZL DCL-4 ON 2"x1"TR, 4"HG, 3"x1"HG TO 3"x3"DCL6	DJH	DPD	FJT
0	11/21/02	ISSUED FOR CONSTRUCTION	DJH	DPD	FJT

THIS DOCUMENT AND THE INFORMATION IT CONTAINS ARE THE PROPERTY OF BARLOW ENGINEERING, LLC, ARE DISCLOSED IN CONFIDENCE FOR LIMITED USE AND MUST BE SURRENDERED TO BARLOW ENGINEERING, LLC ON DEMAND.

DISCLOSURE, PUBLICATION OR DISTRIBUTION OF THIS DOCUMENT WITHOUT PRIOR WRITTEN AUTHORIZATION FROM BARLOW ENGINEERING, LLC IS STRICTLY PROHIBITED.

COPYRIGHT BARLOW ENGINEERING, LLC AS OF THE DATE DRAWN OR REVISED.

Barlow Engineering Services, LLC.
116 Inverness Drive East
Englewood, CO
E-mail: engr@barlowprojects.com
Phone: (303) 292-0213
Fax: (303) 799-1338
Web: www.barlowprojects.com

BES PROJECT NO.	6015	
DESIGNED BY:	DJH	01/21/03
DRAWN BY:	DJH	01/21/03
CHECKED BY:	JWC	01/21/03
APPROVED BY:	FJT	01/21/03
SCALE:	N.T.S.	
DO NOT SCALE THIS DRAWING, USE DIMENSIONS ONLY.		

DRAWING TITLE:
FLY ASH HANDLING UNIT #1
PIPING & INSTRUMENTATION DIAGRAM

DRAWING NUMBER:
M205

PROJECT: HARRISONBURG RESOURCE RECOVERY FACILITY

SHEET NUMBER: 1 REV: 2

PROPRIETARY & CONFIDENTIAL

- To be removed
- To be cleaned and removed
- Specific cleaning/demolition/removal requirements (See project documents)

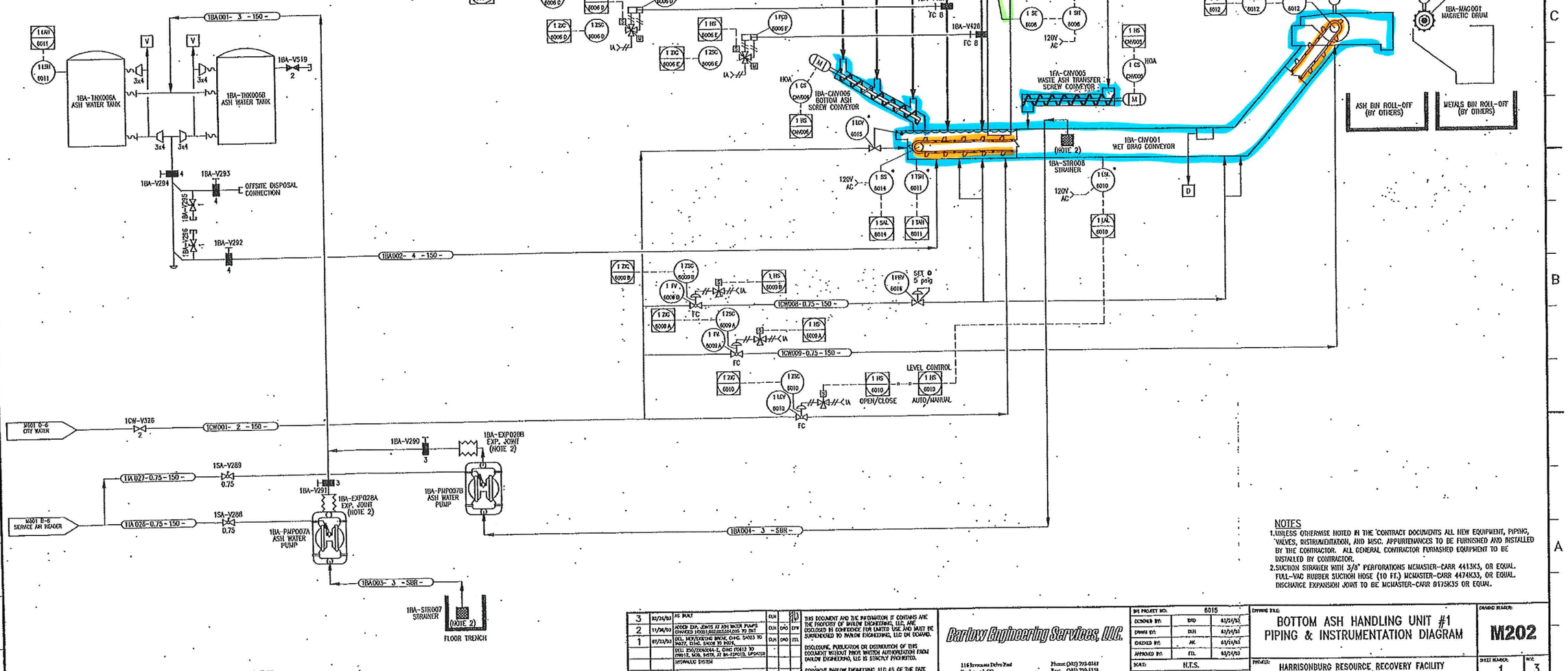

NOTES
1. UNLESS OTHERWISE NOTED IN THE CONTRACT DOCUMENTS ALL NEW EQUIPMENT, PIPING, VALVES, INSTRUMENTATION, AND MISC. APPURTENANCES TO BE FURNISHED AND INSTALLED BY THE CONTRACTOR. ALL GENERAL CONTRACTOR FURNISHED EQUIPMENT TO BE INSTALLED BY CONTRACTOR.
2. SUCTION STRAINER WITH 3/8" PERFORATIONS MCMASTER-CARR 4413K3, OR EQUAL. FULL-VAC RUBBER SUCTION HOSE (10 FT.) MCMASTER-CARR 4474K33, OR EQUAL. DISCHARGE EXPANSION JOINT TO BE MCMASTER-CARR 9175K35 OR EQUAL.

3	02/24/03	AS BUILT	DJH		
2	11/26/02	ADDED EXP. JOINTS AT ASH WATER PUMPS CHANGED 1HO03/SST/0.625/0.035 TO 3ST	DJH	DPD	EPF
1	07/23/02	DEL. BFP/EXISTING BMCW, CHG. S-003 TO P-077, CHG. S-004 TO P-074, DEL: 2SD/2DR0004-L, CHG 1SD12 TO 1HO12, MOD. NOTE 21 TO 1A-2SD12, UPDATED HYDRAULIC SYSTEM	DJH	DPD	FTL
0	01/21/02	ISSUED FOR CONSTRUCTION	DJH	DPD	FTL

THIS DOCUMENT AND THE INFORMATION IT CONTAINS ARE THE PROPERTY OF BARLOW ENGINEERING, LLC, ARE DISCLOSED IN CONFIDENCE FOR LIMITED USE AND MUST BE SURRENDERED TO BARLOW ENGINEERING, LLC ON DEMAND.

DISCLOSURE, PUBLICATION OR DISTRIBUTION OF THIS DOCUMENT WITHOUT PRIOR WRITTEN AUTHORIZATION FROM BARLOW ENGINEERING, LLC IS STRICTLY PROHIBITED.

COPYRIGHT BARLOW ENGINEERING, LLC AS OF THE DATE DRAWN OR REVISED.

Barlow Engineering Services, LLC.
116 Inverness Drive East
Englewood, CO
Email: mail@barlowprojects.com
Phone: (303) 792-0347
Fax: (303) 792-1178
Web: www.barlowprojects.com

B&E PROJECT NO:	6015	
DESIGNED BY:	DPD	02/21/03
DRAWN BY:	DJH	02/21/03
CHECKED BY:	JAK	02/21/03
APPROVED BY:	FTL	02/21/03
SCALE:	N.T.S.	
DO NOT SCALE THIS DRAWING. USE DIMENSIONS ONLY.		

DRAWING TITLE: BOTTOM ASH HANDLING UNIT #1 PIPING & INSTRUMENTATION DIAGRAM

DRAWING NUMBER: M202

PROJECT: HARRISONBURG RESOURCE RECOVERY FACILITY

SHEET NUMBER: 1 | REV: 3

PROPRIETARY & CONFIDENTIAL

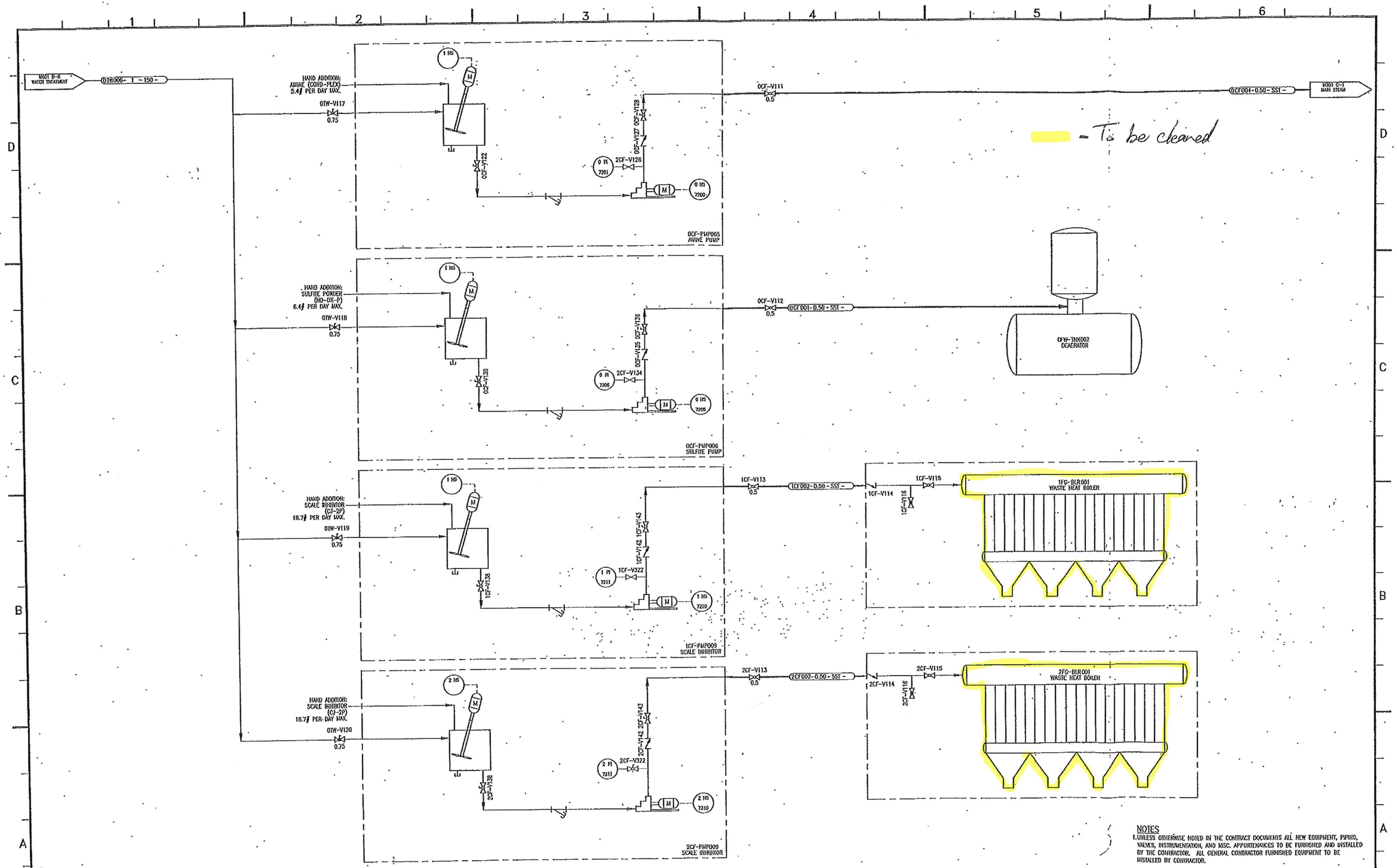

NOTES

1. UNLESS OTHERWISE NOTED IN THE CONTRACT DOCUMENTS ALL NEW EQUIPMENT, PIPING, VALVES, INSTRUMENTATION, AND MISC. APPURTENANCES TO BE FURNISHED AND INSTALLED BY THE CONTRACTOR. ALL GENERAL CONTRACTOR FURNISHED EQUIPMENT TO BE INSTALLED BY CONTRACTOR.

1	03/24/03	AS BUILT	DLH	
0		ISSUED FOR CONSTRUCTION	DLH	

THIS DOCUMENT AND THE INFORMATION IT CONTAINS ARE THE PROPERTY OF BARLOW ENGINEERING, LLC, ARE DISCLOSED IN CONFIDENCE FOR LIMITED USE AND MUST BE SURRENDERED TO BARLOW ENGINEERING, LLC ON DEMAND.

DISCLOSURE, PUBLICATION OR DISTRIBUTION OF THIS DOCUMENT WITHOUT PRIOR WRITTEN AUTHORIZATION FROM BARLOW ENGINEERING, LLC IS STRICTLY PROHIBITED.

COPYRIGHT BARLOW ENGINEERING, LLC AS OF THE DATE

Barlow Engineering Services, LLC.
116 Inverness Drive East
Englewood, CO
Phone: (303) 772-0249
Fax: (303) 799-1238

BY PROJECT NO.	6015	
DESIGNED BY:	GRO	03/24/03
DRAWN BY:	DLH	03/24/03
CHECKED BY:	AK	03/24/03
APPROVED BY:	FEL	03/24/03
SCALE:	N.T.S.	

DRAWING TITLE:

CHEMICAL FEED PIPING & INSTRUMENTATION DIAGRAM

DRAWING NUMBER: M602

PROJECT: HARRISONBURG RESOURCE RECOVERY FACILITY

SHEET NUMBER: 1 REV: 1

PROPRIETARY & CONFIDENTIAL

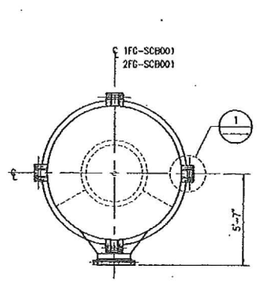

PLAN – REACTOR
1/4"=1'-0" (2 REQ'D)

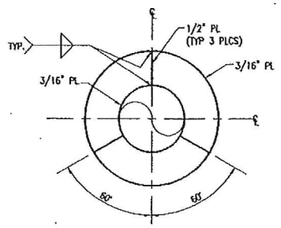

SECTION A
1/4"=1'-0"

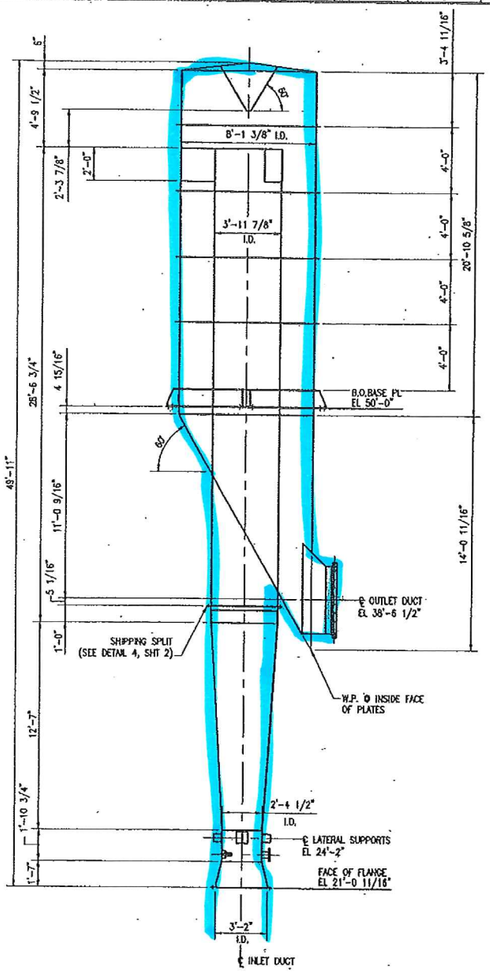

ELEVATION – LOOKING EAST
1/4"=1'-0"

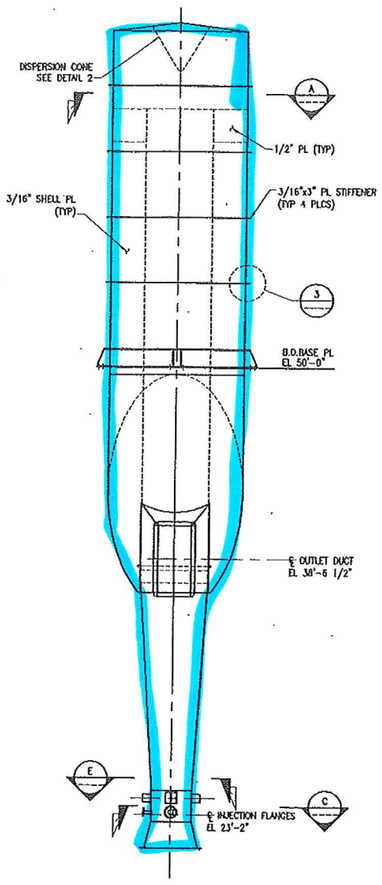

ELEVATION – LOOKING NORTH
1/4"=1'-0"

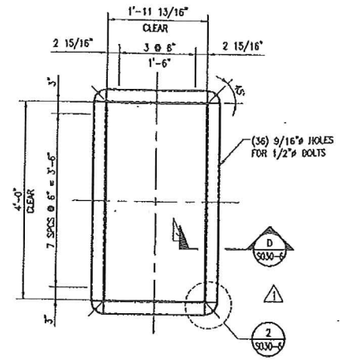

OUTLET FLANGE
3/4"=1'-0"

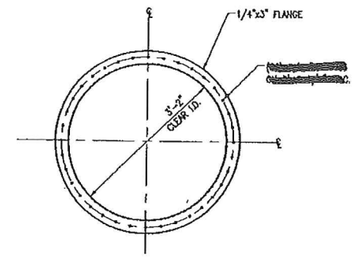

INLET FLANGE
3/4"=1'-0"

NOTES:

1. PROVIDE TWO REACTORS AS SHOWN.
2. WORK THIS DRAWING WITH DWG S025–SHT 2.
3. FOR ADDITIONAL TECHNICAL REQUIREMENTS SEE SPECIFICATION SP–S210 – APC SYSTEM STRUCTURES.
4. ALL REACTOR SHELL PLATES TO BE 3/16" A36 UNLESS OTHERWISE NOTED.
5. ALL SHELL PLATE JOINTS SHALL BE MADE WITH FULL PENETRATION WELDS.

REFERENCE DRAWINGS:

BARLOW ENGINEERING SERVICES

S006–SHT 1 REACTOR SUPPORT FRAMING
S030–SHT 6 BAGHOUSE LOWER ASSEMBLY

– To be cleared and removed

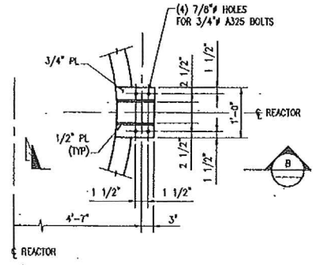

DETAIL 1
3/4"=1'-0"

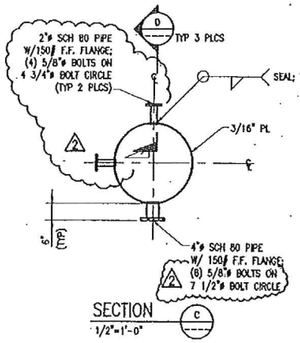

SECTION C
1/2"=1'-0"

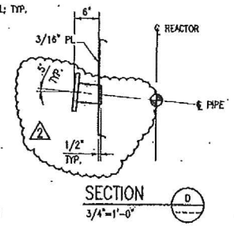

SECTION D
3/4"=1'-0"

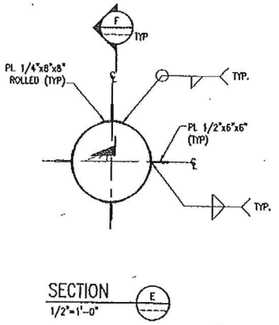

SECTION E
1/2"=1'-0"

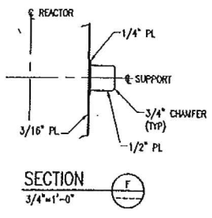

SECTION F
3/4"=1'-0"

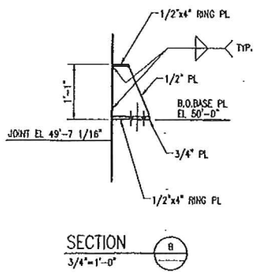

SECTION B
3/4"=1'-0"

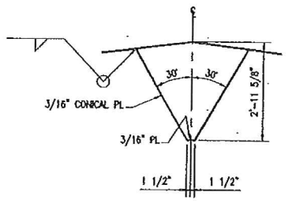

DETAIL 2
1 1/2"=1'-0"

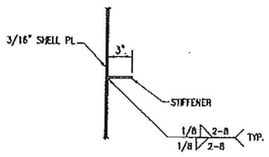

DETAIL 3
1 1/2"=1'-0"

PROPRIETARY & CONFIDENTIAL

REV	DATE	DESCRIPTION	DWG	CHK	APP
2	10/1/02	INCORP. PROCESAR & VENDOR COMMENTS MODIFIED INLET LOCATIONS, DEL NOTE 8	CM	DVS	FD
1	8/9/02	ADDED FLANGE DETAILS	DLK	DVS	FD
0	7/31/02	CONFIRED FOR FABRICATION	DWG	CHK	APP

THIS DOCUMENT AND THE INFORMATION IT CONTAINS ARE THE PROPERTY OF BARLOW ENGINEERING, LLC. ARE DISCLOSED IN CONFIDENCE FOR LIMITED USE AND MUST BE SURRENDERED TO BARLOW ENGINEERING, LLC ON DEMAND.

DISCLOSURE, PUBLICATION OR DISTRIBUTION OF THIS DOCUMENT WITHOUT PRIOR WRITTEN AUTHORIZATION FROM BARLOW ENGINEERING, LLC IS STRICTLY PROHIBITED.

COPYRIGHT BARLOW ENGINEERING, LLC AS OF THE DATE. DRAWN OR REVISED.

Barlow Engineering Services, LLC.
114 Inverness Drive East
Englewood, CO
E-mail: eng@barlowprojects.com
Phone: (303) 793-0218
Fax: (303) 793-1218
Web: www.barlowprojects.com

BPI PROJECT NO.	6015
DESIGNED BY:	DWB 7/31/02
DRAWN BY:	DWB 7/31/02
CHECKED BY:	GRT 7/31/02
APPROVED BY:	AB 7/31/02
SCALE:	AS NOTED
	DO NOT SCALE THIS DRAWING; USE DIMENSIONS ONLY

DRAWING TITLE: VENTURI REACTOR PLAN ELEVATIONS & DETAILS

PROJECT: HARRISONBURG RESOURCE RECOVERY FACILITY

DRAWING NUMBER: S025

SHEET NUMBER: 1 REV: 2

FOR INFORMATION ONLY

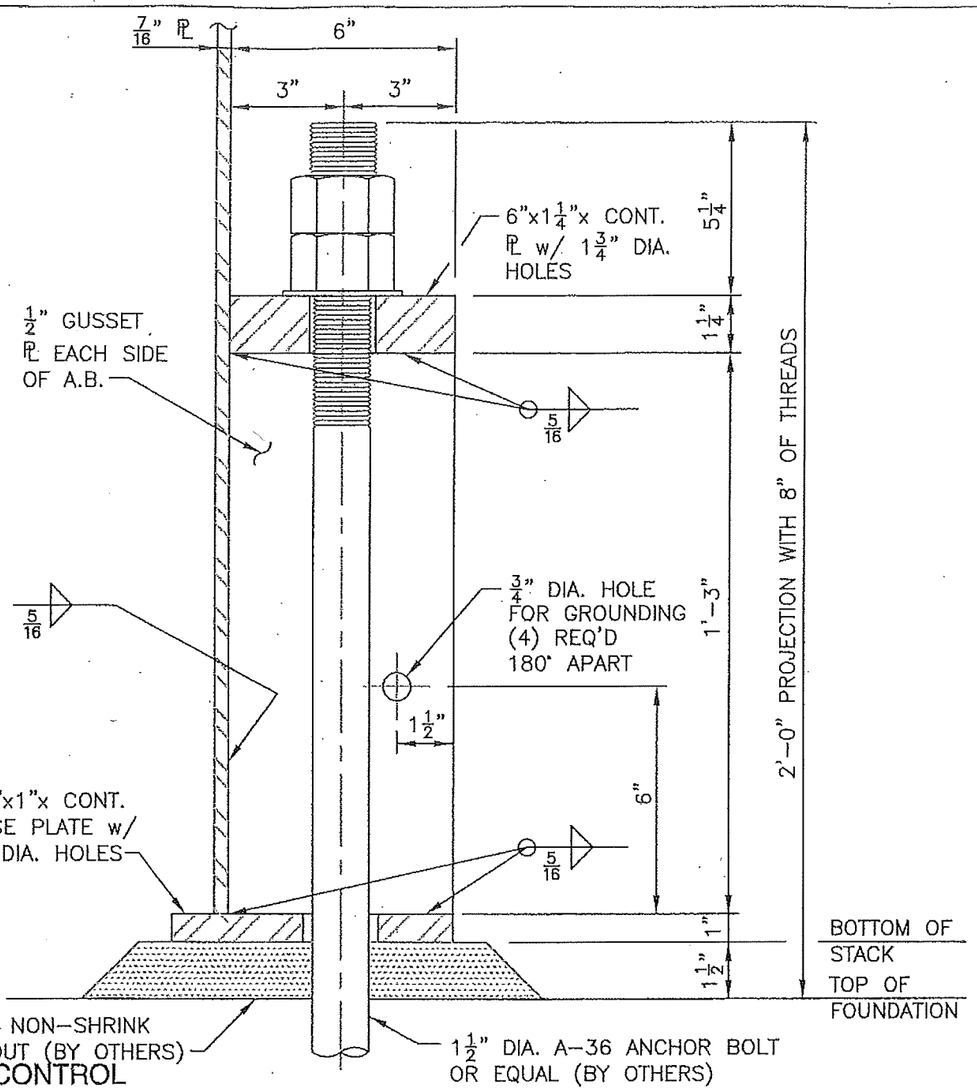

DOC CONTROL

OCT 2 8 2002

RECEIVED

SECTION A

SCALE: N.T.S.

S1 | S1

Anchor Bolt Detail

SCALE: 1/2"=1'-0"

NOT FOR CONSTRUCTION
PRELIMINARY
NOT FOR CONSTRUCTION

HARRISONBURG RESOURCE RECOVERY FACILITY
BPI P.O. #: 60150012
BPI TAG #: OFG-STK001
BPI FILE #: S220
BPI CONTRACT #: 6015

WARREN ENVIRONMENT, INC.
ATLANTA GEORGIA

NO.	DATE	DWN/CHK

REVISIONS

APPROVED BY	RSA	SCALE AS SHOWN	DATE 10-23-02
DRAWN BY	KHK	BLOCK NO./NAME D02-49-AB2-0	

CAD FILE: 02-49-AB2

FOR INFORMATION ONLY

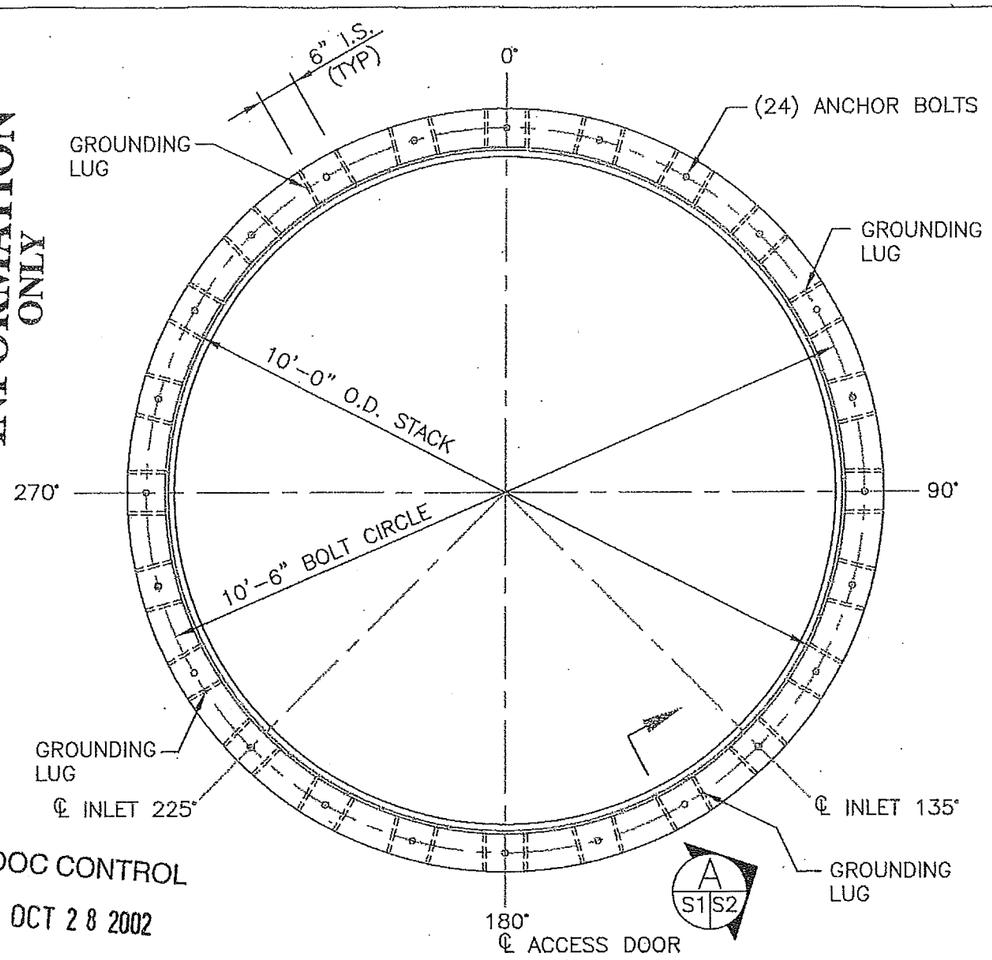

DOC CONTROL

OCT 2 8 2002

RECEIVED

ANCHOR BOLT PLAN

SCALE: N.T.S.

FOUNDATION DESIGN LOADS			
DEAD LOAD OF STACK (MIN.)	80.0 KIPS	WIND SPEED	70 MPH
WIND SHEAR AT BASE OF STACK	25.5 KIPS	IMPORTANCE FACTOR	1.00
WIND MOMENT AT BASE OF STACK	2150 KIP-FT.	EXPOSURE CATEGORY	C
WIND CODE:	BOCA 99	SEISMIC LOADS DO NOT CONTROL	

NOT FOR CONSTRUCTION

PRELIMINARY

NOT FOR CONSTRUCTION

HARRISONBURG RESOURCE RECOVERY FACILITY

BPI P.O. #: 60150012

BPI TAG #: OFG-STK001

BPI FILE #: S220

BPI CONTRACT #: 6015

WARREN ENVIRONMENT, INC.

ATLANTA GEORGIA

NO.	DATE	DWN/CHK

REVISIONS

APPROVED BY	RSA	SCALE AS SHOWN	DATE 10-23-02
DRAWN BY	KHK	BLOCK NO./NAME D02-49-AB1-0	

SCALE: $\frac{1}{2}$"=1'-0"

CAD FILE: 02-49-AB1

— To be cleaned

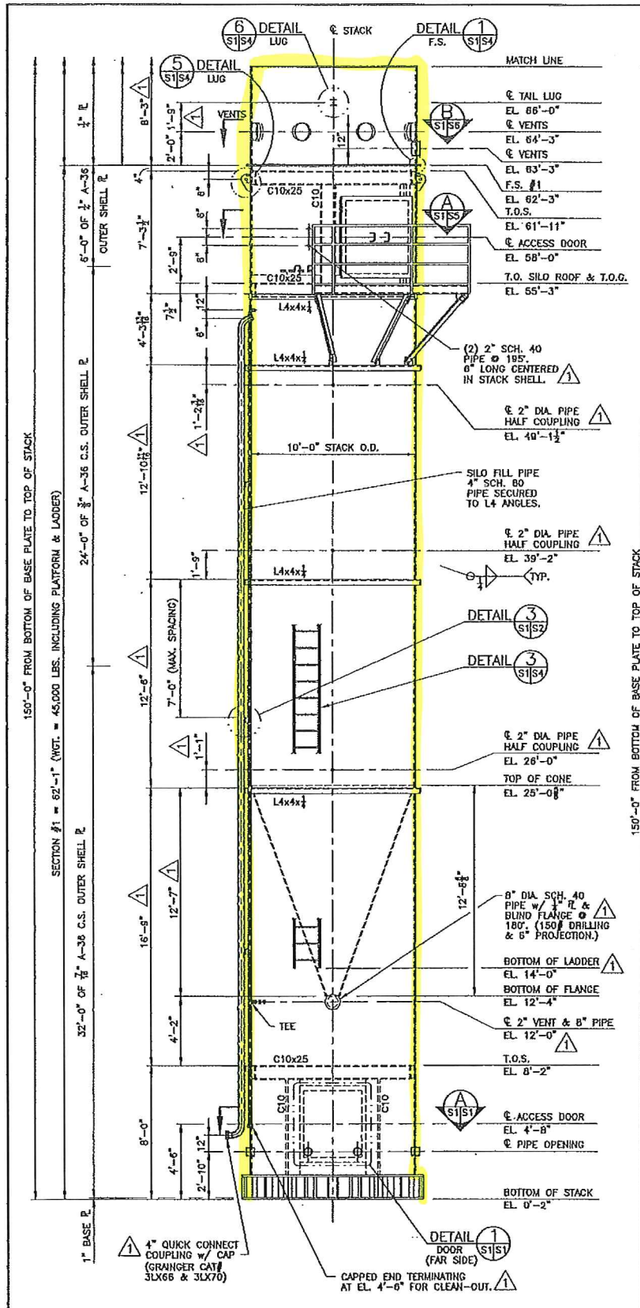

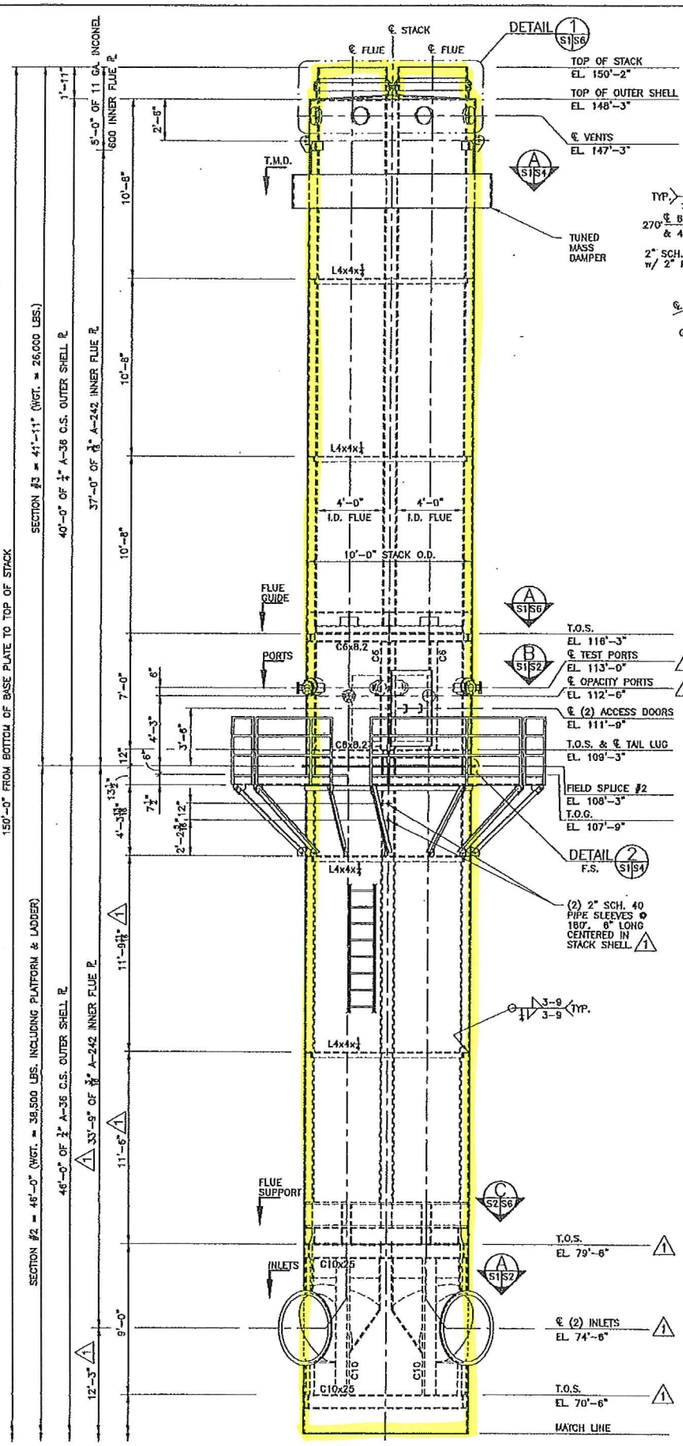

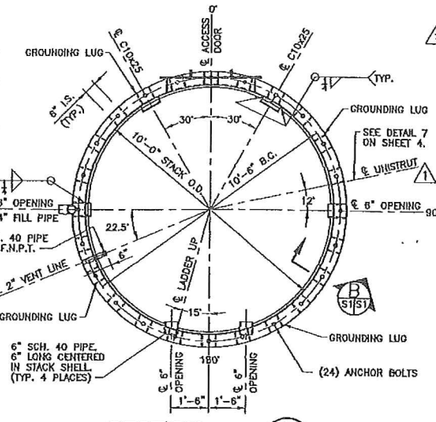

SECTION
SCALE: ⅜" = 1'-0"
A S1|S1

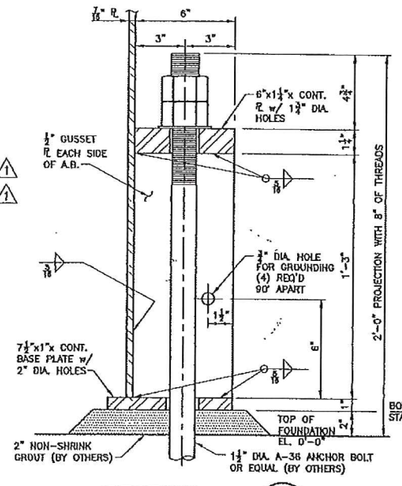

SECTION
N.T.S.
B S1|S1

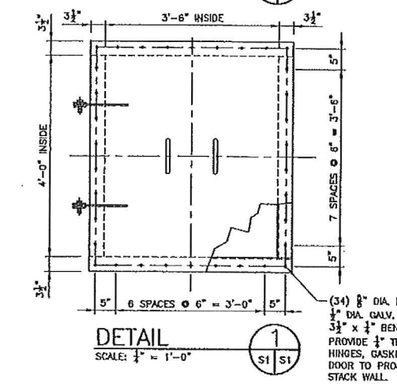

DETAIL 1 S1|S1
SCALE: ½" = 1'-0"

GENERAL NOTES

1. MATERIAL
A. STACK OUTER SHELL PLATES AND ALL EXTERNAL AND INTERNAL COMPONENT PARTS SUCH AS ANCHOR BOLT CHAIR, STIFFENERS, TUNED MASS DAMPER, SILO ROOF, SILO CONE, AND LIFTING LUGS SHALL CONFORM TO ASTM A-36 CARBON STEEL UNLESS NOTED OTHERWISE. THE TWO INNER FLUES ALONG WITH THE FIELD SPLICE FLANGES ON THE INNER FLUES SHALL CONFORM TO ASTM A242 TYPE 1 HIGH STRENGTH SELF WEATHERING STEEL UNLESS NOTED OTHERWISE. THE TOP OF THE INNER FLUES AND COUNTERFLASHINGS FOR THE INNER FLUES SHALL BE INCONEL 600 UNLESS NOTED OTHERWISE.
B. THE OUTSIDE OF THE INNER FLUES SHALL BE INSULATED WITH TWO 1" LAYERS OF OWENS-CORNING TIW INSULATION. THE INSULATION SHOULD BE IMPALED ON 3/16" PIN STUDS SPACED 18" ON CENTERS WITH THE SEAMS STAGGERED TO PREVENT HOT SPOTS AND SECURED WITH SPEED CLIPS AND WIRE MESH. THE INNER FLUES SHALL BE LAGGED WITH AN EMBOSSED ALUMINUM LAGGING AT THE INTERIOR PLATFORM LOCATION TO A HEIGHT OF 8'-0" ABOVE THE GRATING AND AT THE OUTER SHELL PENETRATIONS.
C. THE PLATFORM AND LADDER SHALL BE FABRICATED FROM ASTM A-36 CARBON STEEL AND HOT DIPPED GALVANIZED UNLESS NOTED OTHERWISE.
D. ALL FASTENERS FOR ACCESS DOORS, TEST PORTS, FIELD SPLICES, PLATFORM, LADDER AND ANY OTHER BOLTING REQUIREMENTS SHALL BE GALVANIZED ASTM A-325 FASTENERS UNLESS NOTED OTHERWISE.

2. FABRICATION
ALL WORK SHALL BE FABRICATED IN ACCORDANCE WITH AISC "SPECIFICATIONS FOR STRUCTURAL STEEL BUILDINGS", LATEST EDITION. ALL WELDS SHALL BE MADE ONLY BY WELDING OPERATORS WHO HAVE BEEN PREVIOUSLY QUALIFIED BY TESTS AS PRESCRIBED IN THE AWS "STRUCTURAL WELDING CODE", OR BY THE ASME WELDING CODE, TO PERFORM THE TYPE WORK REQUIRED. ALL BUTT WELDS SHALL BE PRE-QUALIFIED, FULL PENETRATION WELDS AND SHALL DEVELOP THE FULL STRENGTH OF THE SECTION. SHELL GIRTH AND VERTICAL SEAMS SHALL BE COMPLETE PENETRATION BUTT GROOVE WELDS AND TOTALLY WELDED EITHER AUTOMATICALLY OR SEMI-AUTOMATICALLY BY THE SUBMERGED ARC WELDING PROCESS. ALL WELDING ELECTRODES AND FLUX SHALL CONFORM TO THE AWS CODE AND BE EQUIVALENT TO THE BASE METAL IN STRENGTH, CORROSION RESISTANCE, AND WEATHERED APPEARANCE.

3. TOLERANCES
A. BASE RING AND SPLICES MUST BE PERPENDICULAR TO THE STACK CENTERLINE SUCH THAT THE ERECTION OF THE STACK CAN BE PLUMBED TO WITHIN A MAXIMUM DEVIATION OF 1" PER 100' OF HEIGHT.
B. MAXIMUM OUT-OF-ROUNDNESS OF ANY SECTION = DIFFERENCE BETWEEN MINIMUM AND MAXIMUM DIAMETER - LESS THAN 1% OF THE NORMAL DIAMETER.
C. MAXIMUM MISALIGNMENT OF PLATES AT ANY JOINT SHALL NOT TO EXCEED 25% OF THE NORMAL THICKNESS OR 1/8", WHICHEVER IS LESS.
D. ADJOINING PLATE SECTIONS SHALL BE PAIRED FOR FULL 100% DEVELOPMENT.
E. PEAKING OF VERTICAL JOINTS SHALL NOT EXCEED 1/4" AS MEASURED FROM THE TRUE RADIUS OF THE STACK.
F. TEST PORT FLANGES SHALL BE PERPENDICULAR TO THE CENTERLINE TO WITHIN 1/2 DEGREE. FIELD SPLICE FLANGES MUST BE PERPENDICULAR TO THE STACK SHELL WITHIN 1/16".
G. STRUCTURAL PLATES ARE TO BE PURCHASED OF SUFFICIENT LENGTH TO ALLOW FOR ONLY ONE VERTICAL SEAM PER GIRTH. VERTICAL SEAMS ON ADJACENT SECTIONS WILL BE OFFSET BY 90 DEGREES. IN SPECIAL CASES, A MAXIMUM OF TWO VERTICAL SEAMS WILL BE OFFSET AT LEAST BY 90 DEGREES.
H. ALL APPURTENANCES, INCLUDING PLATFORMS AND LADDERS, SHALL BE SHOP ATTACHED TO ENSURE A GOOD FIT. ALL FIELD CONNECTIONS ARE TO BE CLEARLY MATCH MARKED.

4. INSPECTION AND TESTING
MATERIAL TEST REPORTS FOR ALL MATERIAL UTILIZED FOR MAJOR COMPONENTS AND FASTENERS SHALL BE SUBMITTED TO WARREN. THE MATERIAL TEST REPORTS ARE TO BE REQUESTED WHEN THE MATERIAL IS ORDERED AND FORWARDED TO WARREN IMMEDIATELY UPON RECEIPT. THE MSDS SHEETS ON THE TOUCH-UP PAINTS, THINNERS AND ANY OTHER HAZARDOUS MATERIAL IS TO BE INCLUDED WITH THE SHIPMENT OF THE ITEMS. ALL OF THE STACK WELDS SHALL BE 100% VISUALLY INSPECTED BY A AWS CERTIFIED WELDING INSPECTOR. THE STACK BUTT WELDS ON THE OUTER SHELL AND INNER FLUES SHALL BE RADIOGRAPHED. ONE SPOT FOR EVERY 10 FOOT LENGTH OF SHOP BUTT WELDS OF EACH SIZE SHALL BE RADIOGRAPHED. FILLET WELDS AND PARTIAL PENETRATION WELDS OCCURING AT THE BASE RING SHALL BE TESTED BY THE MAGNETIC PARTICAL METHOD AFTER BEING VISUALLY INSPECTED. AT LEAST 1 FOOT OF EVERY 10 FOOT LENGTH OF WELD OF EACH SIZE SHALL BE TESTED. FILLET WELDS SHALL BE GROUND SMOOTH AS REQUIRED TO FACILITATE TESTING, BUT SHALL HAVE THE REQUIRED CROSS-SECTION BEFORE TESTING IS STARTED. ACCEPTANCE CRITERIA FOR ALL NON DESTRUCTIVE TESTING SHALL BE IN ACCORDANCE WITH AWS D1.1.

5. SURFACE PREPARATION
A. ALL SHARP PROJECTIONS SHALL BE GROUND SMOOTH
B. ALL WELD FLUX AND SPLATTER SHALL BE REMOVED BY POWER TOOL CLEANING.
C. ALL EXTERIOR AND INTERIOR SURFACES OF THE OUTER SHELL INCLUDING SUPPPORT STEEL AND FLUE GUIDES ARE TO BE CLEANED PER AN SSPC-SP10 SANDBLAST CLEANING WITH THE EXCEPTION OF THE INTERIOR OF THE SILO AREA THAT WILL BE IN CONTACT WITH THE HYDRATED LIME. THE INCONEL TOP CAP, AND COUNTERFLASHINGS SHALL RECEIVE A POWER TOOL AND SOLVENT CLEANING PER SSPC-SP3. THE ASTM A242 INNER FLUES DO NOT REQUIRE CLEANING.

1 6. PAINTING SPECIFICATION
APPLY ONE PRIME COAT OF AMERON AMERCOAT 68HS AT 3 MILS DFT TO ALL EXTERIOR AND INTERIOR SURFACES OF THE OUTER SHELL WITH THE EXCEPTION OF THE SILO AREA THAT WILL BE IN CONTACT WITH THE HYDRATED LIME. THE EXTERIOR OF THE OUTER SHELL SHALL BE TOP COATED WITH AMERON PSX 700 AT 5 TO 7 MILS DFT (FINISH COLOR SHALL BE CLAY TAN # 16001). THE INCONEL TOP CAP, FLUES AND COUNTERFLASHING SHALL NOT BE PAINTED. INCLUDE 2 GALLONS OF TOUCH-UP PAINT WITH SHIPMENT. ALL TEMPORARY ITEMS THAT MUST BE REMOVED SHALL BE PAINTED YELLOW.

7. LOADING AND SHIPPING
THE STACK WILL BE LOADED AND SECURED ON TRUCKS SUCH THAT PLATES ARE NOT DEFORMED AND THE PAINT SYSTEM IS NOT COMPROMISED. STACK LOADS ARE TO BE DISTRIBUTED OVER LARGE AREAS. POINT LOADS ON PLATES ARE TO BE AVOIDED. TIMBERS USED TO SECURE LOADS ARE TO BE PLACED LONGITUDINALLY, SPANNING AT LEAST TWO STIFFENERS. THE ERECTOR IS TO REMOVE ALL TEMPORARY SPACERS AND BRACES BEFORE COMPLETING THE ERECTION.

DOC CONTROL
DEC 2 0 2002
RECEIVED

CERTIFIED FOR CONSTRUCTION
FILE # S220

COMMONWEALTH OF VIRGINIA
RICHARD SCOTT SLAY
No. 0402 038084
12/19/02
PROFESSIONAL ENGINEER

FOUNDATION DESIGN LOADS		
DEAD LOAD OF STACK (MAX.)	245	KIPS
DEAD LOAD OF STACK (MIN.)	100	KIPS
WIND SHEAR AT BASE OF STACK	25.5	KIPS
WIND MOMENT AT BASE OF STACK	2150	KIP-FT.
WIND CODE:	BOCA 99	
WIND SPEED	70 MPH	
IMPORTANCE FACTOR	1.0	
EXPOSURE CATEGORY	EXP. C	
SEISMIC LOADS DO NOT CONTROL		

STACK ELEVATION
SCALE: ½" = 1'-0"

NO.	DATE	REVISION	MADE	CHK'D.
1	12-18-02	GENERAL REVISIONS	JAB	

HARRISONBURG RESOURCE RECOVERY FACILITY
BPI P.O. # 60150012
BPI TAG #: OFG-STK001
BPI FILE #: S220
BPI CONTRACT #: 6015
HARRISONBURG VIRGINIA
STACK ELEVATION & DETAILS
WARREN ENVIRONMENT, INC.
5075 ROSWELL ROAD ATLANTA, GA 30342

DRAWN:	MADE	CHK'D.	DESIGN:	MADE	CHK'D.	DATE:	10-29-02
	JAB					SCALE:	AS SHOWN

CUSTOMER DWG. NO.
WARREN DWG. NO. D02-49-S1-1

DATE: 10-29-02 SCALE: ½"=1'-0" CAD FILE: 02-49-1

-To be cleaned

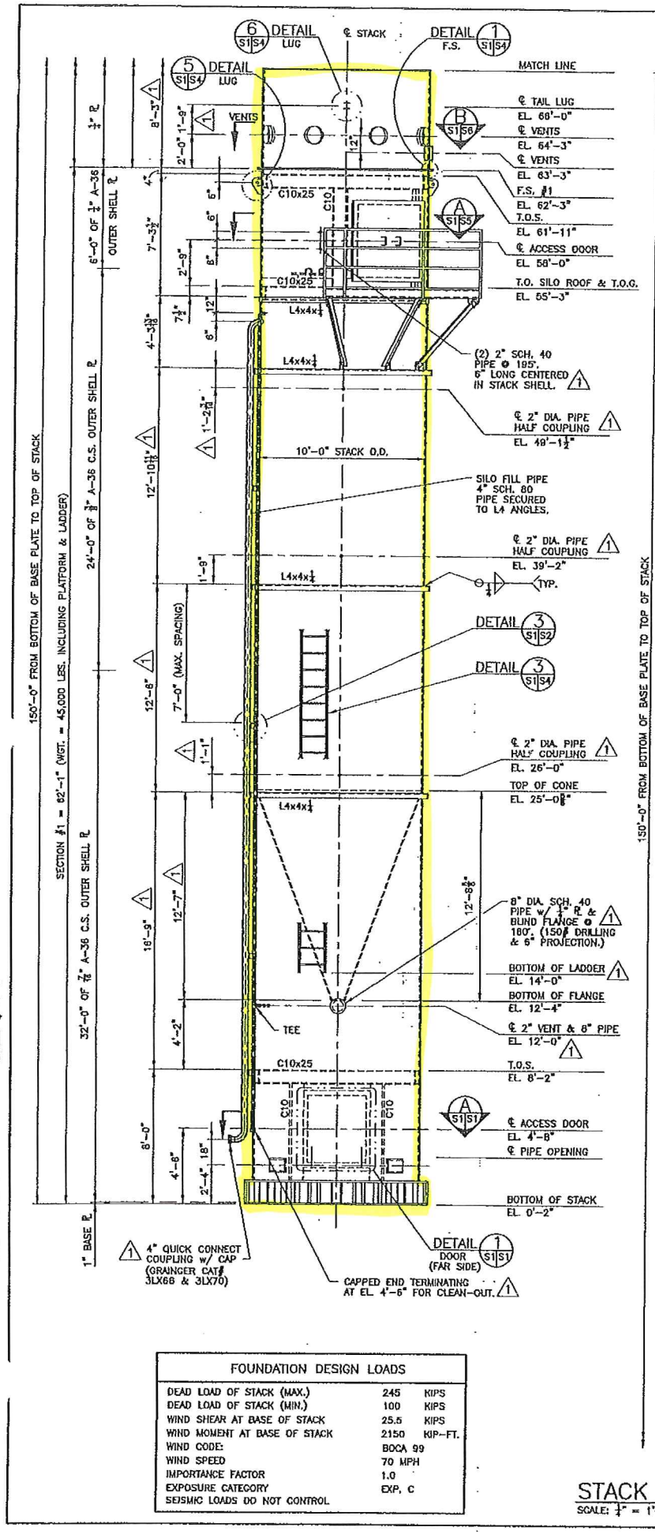

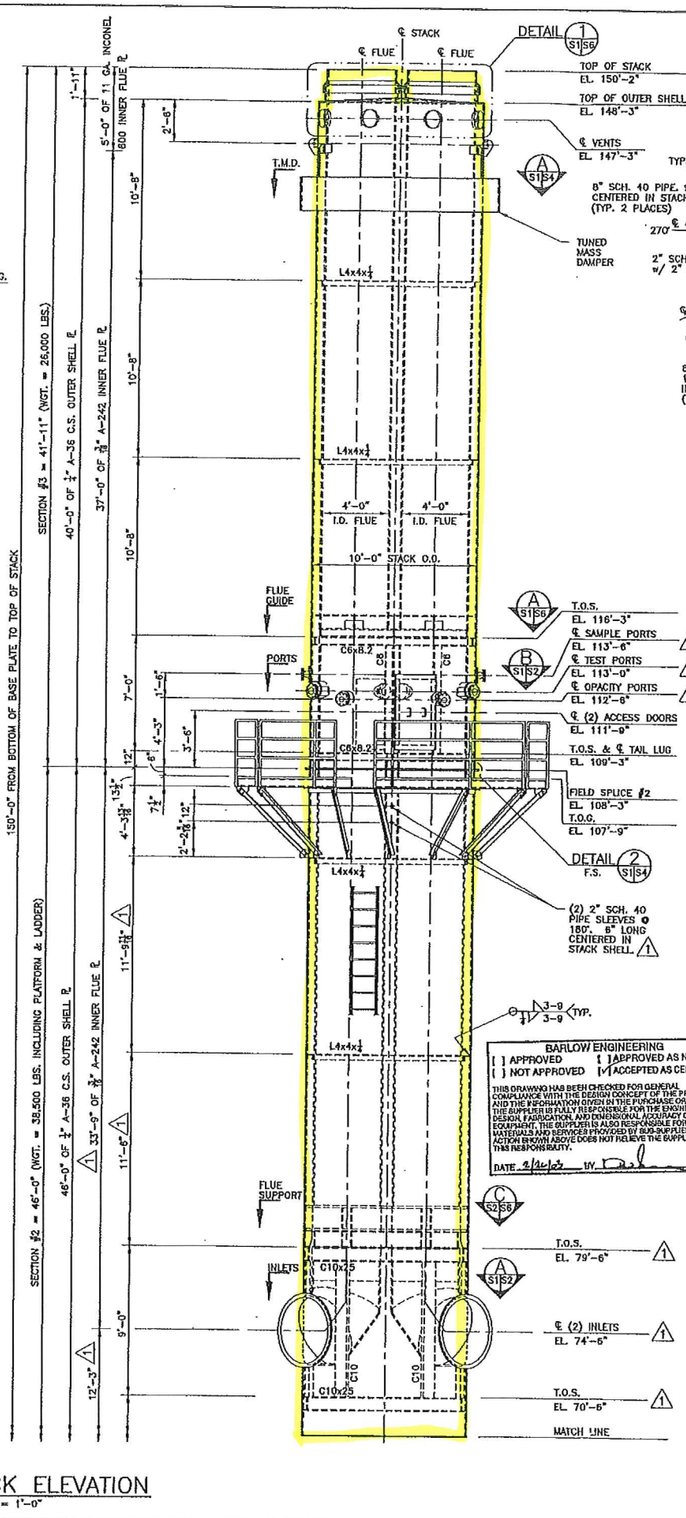

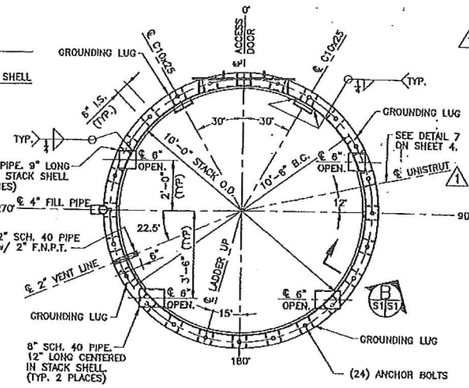

SECTION
SCALE: ⅜" = 1'-0"

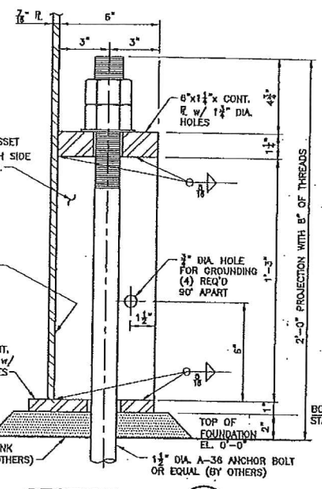

SECTION
N.T.S.

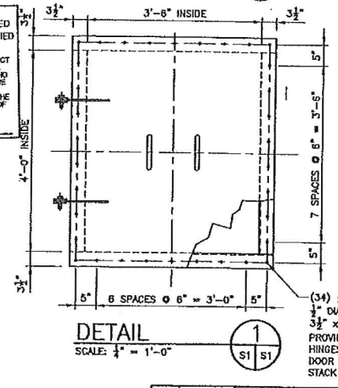

DETAIL
SCALE: ½" = 1'-0"

GENERAL NOTES:

1. MATERIAL
A. STACK OUTER SHELL PLATES AND ALL EXTERNAL AND INTERNAL COMPONENT PARTS SUCH AS ANCHOR BOLT CHAIR, STIFFENERS, TUNED MASS DAMPER, SILO ROOF, SILO CONE, AND LIFTING LUGS SHALL CONFORM TO ASTM A-36 CARBON STEEL UNLESS NOTED OTHERWISE. THE TWO INNER FLUES ALONG WITH THE FIELD SPLICE PLANGES ON THE INNER FLUES SHALL CONFORM TO ASTM A242 TYPE 1 HIGH STRENGTH STEEL WEATHERING STEEL UNLESS NOTED OTHERWISE. THE TOP OF THE INNER FLUES AND COUNTERFLASHINGS FOR THE INNER FLUES SHALL BE INCONEL 600 UNLESS NOTED OTHERWISE.
B. THE OUTSIDE OF THE INNER FLUES SHALL BE INSULATED WITH TWO 1" LAYERS OF OWENS-CORNING TAV INSULATION. THE INSULATION SHOULD BE IMPALED ON 3/16" PIN STUDS SPACED 18" ON CENTERS WITH THE SEAMS STAGGERED TO PREVENT HOT SPOTS AND SECURED WITH SPEED CLIPS AND WIRE MESH. THE INNER FLUES SHALL BE LAGGED WITH AN EMBOSSED ALUMINUM LAGGING AT THE INTERIOR PLATFORM LOCATION TO A HEIGHT OF 8'-0" ABOVE THE GRATING AND AT THE OUTER SHELL PENETRATIONS.
C. THE PLATFORM AND LADDER SHALL BE FABRICATED FROM ASTM A-36 CARBON STEEL AND HOT DIPPED GALVANIZED UNLESS NOTED OTHERWISE.
D. ALL FASTENERS FOR ACCESS DOORS, TEST PORTS, FIELD SPLICES, PLATFORM, LADDER AND ANY OTHER BOLTING REQUIREMENTS SHALL BE GALVANIZED ASTM A-325 FASTENERS UNLESS NOTED OTHERWISE.

2. FABRICATION
ALL WORK SHALL BE FABRICATED IN ACCORDANCE WITH AISC "SPECIFICATIONS FOR STRUCTURAL STEEL BUILDINGS", LATEST EDITION. ALL WELDS SHALL BE MADE ONLY BY WELDING OPERATORS WHO HAVE BEEN PREMOUSLY QUALIFIED BY TESTS AS PRESCRIBED IN THE AWS "STRUCTURAL WELDING CODE", OR BY THE ASME WELDING CODE, TO PERFORM THE TYPE WORK REQUIRED. ALL BUTT WELDS SHALL BE PRE-QUALIFIED, FULL PENETRATION WELDS AND SHALL DEVELOP THE FULL STRENGTH OF THE SECTION. SHELL GIRTH AND VERTICAL SEAMS SHALL BE COMPLETE PENETRATION BUTT GROOVE WELDS AND TOTALLY WELDED EITHER AUTOMATICALLY OR SEMI-AUTOMATICALLY BY THE SUBMERGED ARC WELDING PROCESS. ALL WELDING ELECTRODES AND FLUX SHALL CONFORM TO THE AWS CODE AND BE EQUIVALENT TO THE BASE METAL IN STRENGTH, CORROSION RESISTANCE, AND WEATHERED APPEARANCE.

3. TOLERANCES
A. BASE RING AND SPLICES MUST BE PERPENDICULAR TO THE STACK CENTERLINE SUCH THAT THE ERECTION OF THE STACK CAN BE PLUMBED TO WITHIN A MAXIMUM DEVIATION OF 1" PER 100' OF HEIGHT.
B. MAXIMUM OUT-OF-ROUNDNESS OF ANY SECTION - DIFFERENCE BETWEEN MINIMUM AND MAXIMUM DIAMETER - LESS THAN 1% OF THE NORMAL DIAMETER.
C. MAXIMUM MISALIGNMENT OF PLATES AT ANY JOINT SHALL NOT TO EXCEED 25% OF THE NORMAL THICKNESS OR 1/8", WHICHEVER IS LESS.
D. ADJOINING PLATE SECTIONS SHALL BE PAIRED FOR FULL 100% DEVELOPMENT.
E. PEAKING OF VERTICAL JOINTS SHALL NOT EXCEED 1/4" AS MEASURED FROM THE TRUE RADIUS OF THE STACK.
F. TEST PORT FLANGES SHALL BE PERPENDICULAR TO THE CENTERLINE TO WITHIN 1/2 DEGREE. FIELD SPLICE FLANGES MUST BE PERPENDICULAR TO THE STACK SHELL WITHIN 1/16".
G. STRUCTURAL PLATES ARE TO BE PURCHASED OF SUFFICIENT LENGTH TO ALLOW FOR ONLY ONE VERTICAL SEAM PER GIRTH. VERTICAL SEAMS ON ADJACENT SECTIONS WILL BE OFFSET BY 90 DEGREES. IN SPECIAL CASES, A MAXIMUM OF TWO VERTICAL SEAMS WILL BE OFFSET AT LEAST BY 90 DEGREES.
H. ALL APPURTENANCES, INCLUDING PLATFORMS AND LADDERS, SHALL BE SHOP ATTACHED TO ENSURE A GOOD FIT. ALL FIELD CONNECTIONS ARE TO BE CLEARLY MATCH MARKED.

4. INSPECTION AND TESTING
MATERIAL TEST REPORTS FOR ALL MATERIAL UTILIZED FOR MAJOR COMPONENTS AND FASTENERS SHALL BE SUBMITTED TO WARREN. THE MATERIAL TEST REPORTS ARE TO BE REQUESTED WHEN THE MATERIAL IS ORDERED AND FORWARDED TO WARREN IMMEDIATELY UPON RECEIPT. THE MSDS SHEETS ON THE TOUCH-UP PAINTS, THINNERS AND ANY OTHER HAZARDOUS MATERIAL IS TO BE INCLUDED WITH THE SHIPMENT OF THE ITEMS. ALL OF THE STACK WELDS SHALL BE 100% VISUALLY INSPECTED BY A AWS CERTIFIED WELDING INSPECTOR. THE STACK BUTT WELDS ON THE OUTER SHELL AND INNER FLUES SHALL BE RADIOGRAPHED. ONE SPOT FOR EVERY 10 FOOT LENGTH OF SHOP BUTT WELDS OF EACH SIZE SHALL BE RADIOGRAPHED. FILLET WELDS AND PARTIAL PENETRATION WELDS OCCURING AT THE BASE RING SHALL BE TESTED BY THE MAGNETIC PARTICAL METHOD AFTER BEING VISUALLY INSPECTED. AT LEAST 1 FOOT OF EVERY 10 FOOT LENGTH OF WELD OF EACH SIZE SHALL BE TESTED. FILLET WELDS SHALL BE GROUND SMOOTH AS REQUIRED TO FACILITATE TESTING, BUT SHALL HAVE THE REQUIRED CROSS-SECTION BEFORE TESTING IS STARTED. ACCEPTANCE CRITERIA FOR ALL NON DESTRUCTIVE TESTING SHALL BE IN ACCORDANCE WITH AWS D1.1.

5. SURFACE PREPARATION
A. ALL SHARP PROJECTIONS SHALL BE GROUND SMOOTH
B. ALL WELD FLUX AND SPLATTER SHALL BE REMOVED BY POWER TOOL CLEANING.
C. ALL EXTERIOR AND INTERIOR SURFACES OF THE OUTER SHELL INCLUDING SUPPORT STEEL AND FLUE GUIDES ARE TO BE CLEANED PER AN SSPC-SP10 SANDBLAST CLEANING WITH THE EXCEPTION OF THE INTERIOR OF THE SILO AREA THAT WILL BE IN CONTACT WITH THE HYDRATED LIME. THE INCONEL TOP CAP, AND COUNTERFLASHINGS SHALL RECEIVE A POWER TOOL AND SOLVENT CLEANING PER SSPC-SP3. THE ASTM A242 INNER FLUES DO NOT REQUIRE CLEANING.

6. PAINTING SPECIFICATION
APPLY ONE PRIME COAT OF AMERON AMERCOAT 68HS AT 3 MILS DFT TO ALL EXTERIOR AND INTERIOR SURFACES OF THE OUTER SHELL WITH THE EXCEPTION OF THE SILO AREA THAT WILL BE IN CONTACT WITH THE HYDRATED LIME. THE EXTERIOR OF THE OUTER SHELL SHALL BE TOP COATED WITH AMERON PSX 700 AT 5 TO 7 MILS DFT (FINISH COLOR SHALL BE CLAY TAN - #1600). THE INCONEL TOP CAP, FLUES AND COUNTERFLASHING SHALL NOT BE PAINTED. INCLUDE 2 GALLONS OF TOUCH-UP PAINT WITH SHIPMENT. ALL TEMPORARY ITEMS THAT MUST BE REMOVED SHALL BE PAINTED YELLOW.

7. LOADING AND SHIPPING
THE STACK WILL BE LOADED AND SECURED ON TRUCKS SUCH THAT PLATES ARE NOT DEFORMED AND THE PAINT SYSTEM IS NOT COMPROMISED. STACK LOADS ARE TO BE DISTRIBUTED OVER LARGE AREAS. POINT LOADS ON PLATES ARE TO BE AVOIDED. TIMBERS USED TO SECURE LOADS ARE TO BE PLACED LONGITUDINALLY SPANNING AT LEAST TWO STIFFENERS. THE ERECTOR IS TO REMOVE ALL TEMPORARY SPACERS AND BRACES BEFORE COMPLETING THE ERECTION.

FOUNDATION DESIGN LOADS

DEAD LOAD OF STACK (MAX.)	245	KIPS
DEAD LOAD OF STACK (MIN.)	100	KIPS
WIND SHEAR AT BASE OF STACK	25.5	KIPS
WIND MOMENT AT BASE OF STACK	2150	KIP-FT.
WIND CODE:	BOCA 99	
WIND SPEED	70 MPH	
IMPORTANCE FACTOR	1.0	
EXPOSURE CATEGORY	EXP. C	
SEISMIC LOADS DO NOT CONTROL		

BARLOW ENGINEERING
[ ] APPROVED [ ] APPROVED AS NOTED
[ ] NOT APPROVED [√] ACCEPTED AS CERTIFIED
THIS DRAWING HAS BEEN CHECKED FOR GENERAL COMPLIANCE WITH THE DESIGN CONCEPT OF THE PROJECT AND THE INFORMATION GIVEN IN THE PURCHASE ORDER. THE SUPPLIER IS FULLY RESPONSIBLE FOR THE ENGINEERING DESIGN, FABRICATION, AND DIMENSIONAL ACCURACY OF THE EQUIPMENT. THE SUPPLIER IS ALSO RESPONSIBLE FOR THE MATERIALS AND SERVICES PROVIDED BY SUB-SUPPLIERS. THE ACTION SHOWN ABOVE DOES NOT RELIEVE THE SUPPLIER OF THIS RESPONSIBILITY.
DATE 2/12/03 BY

COMMONWEALTH OF VIRGINIA
RICHARD SCOTT SLAY
No. 0402 038084
PROFESSIONAL ENGINEER
2/10/03

CERTIFIED FOR CONSTRUCTION
DOC CONTROL
FEB 19 2003
RECEIVED

NO.	DATE	REVISION	MADE	CHK'D.
3	02-17-03	RAISED SAMPLE PORTS	KHK	RSA
2	02-04-03	REVISED PIPE SLEEVES	KHK	RSA
1	12-1602	GENERAL REVISIONS	JAB	RSA

HARRISONBURG RESOURCE RECOVERY FACILITY
BPI P.O. # 60150012
BPI TAG #: OFG-STK001
BPI FILE #: S220
BPI CONTRACT #: 6015
HARRISONBURG VIRGINIA

STACK ELEVATION & DETAILS

WARREN ENVIRONMENT, INC.
5075 ROSWELL ROAD ATLANTA, GA 30342

DRAWN:	MADE JAB	CHK'D.	DESIGN:	MADE	CHK'D.

DATE: 10-29-02
SCALE: AS SHOWN
CUSTOMER DWG. NO.
WARREN DWG. NO. D02-49-S1-3

CAD FILE: 02-49-
DATE 10-29-02

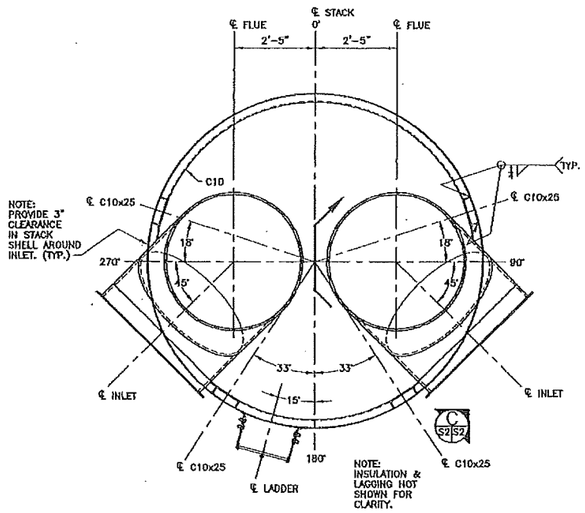

SECTION A
SCALE: ½" = 1'-0"
S1 S2

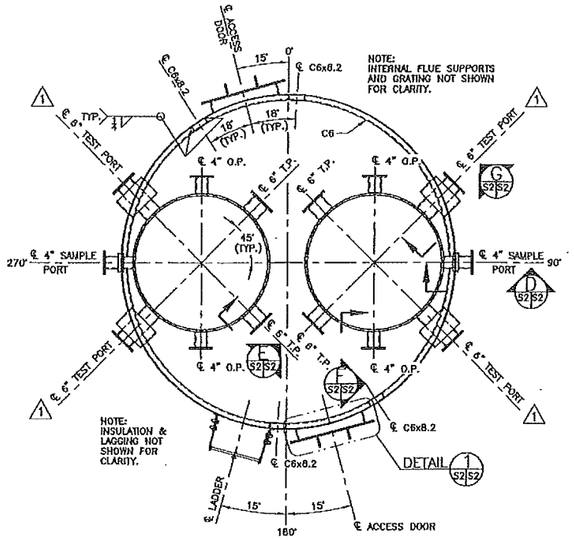

SECTION B
SCALE: ½" = 1'-0"
S1 S2

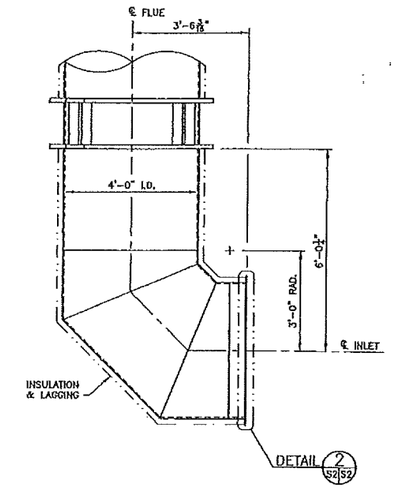

SECTION C
SCALE: ½" = 1'-0"
S2 S2

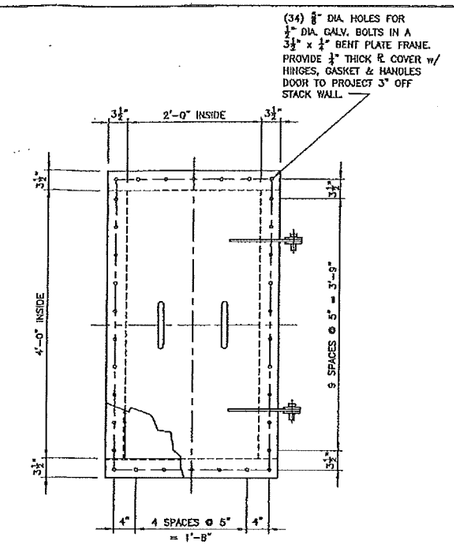

(TYPICAL 2 PLACES)
DETAIL 1
SCALE: 1" = 1'-0"
S2 S2

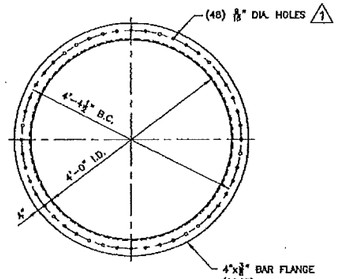

(TYPICAL 2 PLACES)
DETAIL 2
SCALE: ¾" = 1'-0"
S2 S2

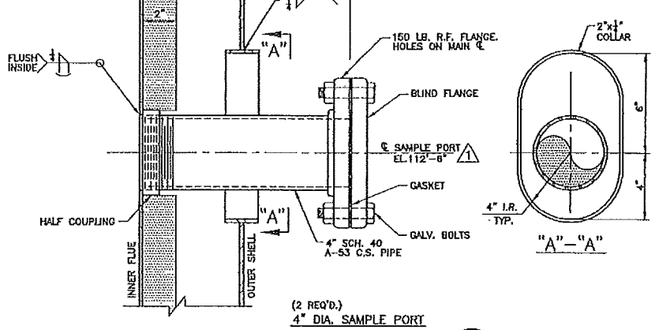

(2 REQ'D.)
4" DIA. SAMPLE PORT
SECTION D
SCALE: 3" = 1'-0"
S2 S2

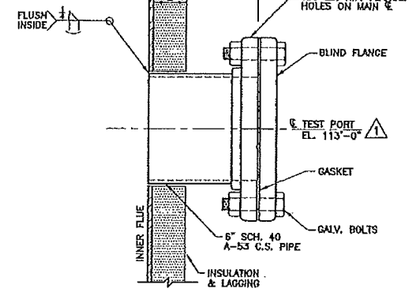

(4 REQ'D.)
6" DIA. TEST PORT
SECTION E
SCALE: 3" = 1'-0"
S2 S2

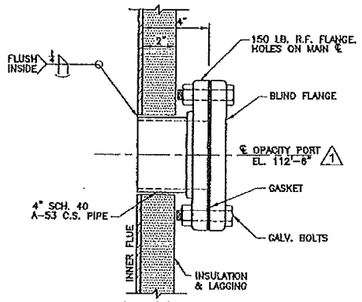

(4 REQ'D.)
4" DIA. OPACITY PORT
SECTION F
SCALE: 3" = 1'-0"
S2 S2

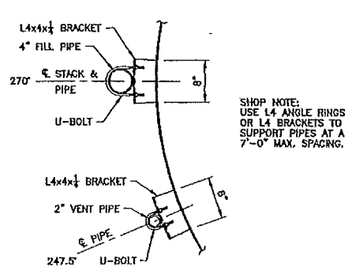

SHOP NOTE:
USE L4 ANGLE RINGS OR L4 BRACKETS TO SUPPORT PIPES AT A 7'-0" MAX. SPACING.

DETAIL 3
SCALE: 1" = 1'-0"
S1 S2 1

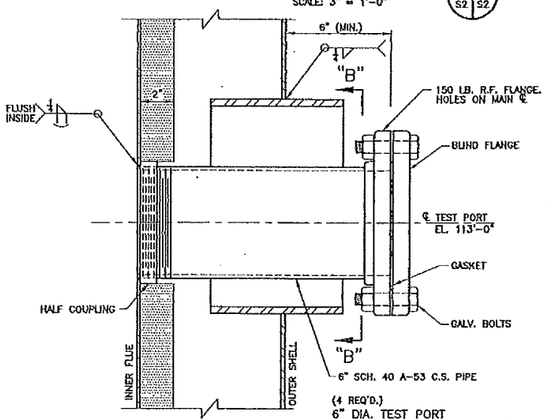

(4 REQ'D.)
6" DIA. TEST PORT
SECTION G
SCALE: 3" = 1'-0"
S2 S2 1

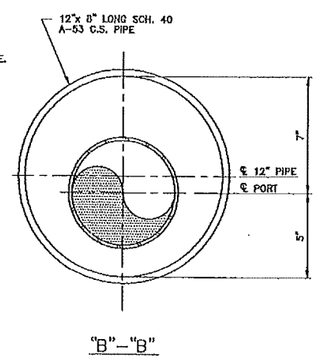

"B"—"B"

COMMONWEALTH OF VIRGINIA
RICHARD SCOTT SLAY
No. 0402 038884
12/16/02
PROFESSIONAL ENGINEER

CERTIFIED FOR CONSTRUCTION

FILE # S220
DOC CONTROL
DEC 20 2002
RECEIVED

NO.	DATE	REVISION	MADE	CHK'D.
1	12-13-02	PORTS, FLANGE, PIPE SUPPORT	JAB	

HARRISONBURG RESOURCE RECOVERY FACILITY
BPI P.O. # 60150012
BPI TAG #: OFG-STK001
BPI FILE #: S220
BPI CONTRACT #: 6015
HARRISONBURG VIRGINIA

INLETS & TEST PORT DETAILS

WARREN ENVIRONMENT, INC.
5075 ROSWELL ROAD ATLANTA, GA 30342

DRAWN: JAB MADE CHK'D. DESIGN: MADE CHK'D.
DATE: 10-30-02
SCALE: AS SHOWN
CUSTOMER DWG. NO.
WARREN DWG. NO. D02-49-S2-1

SCALE: ¾"=1'-0" DATE: 10-30-02 CAD FILE: 02-49-2

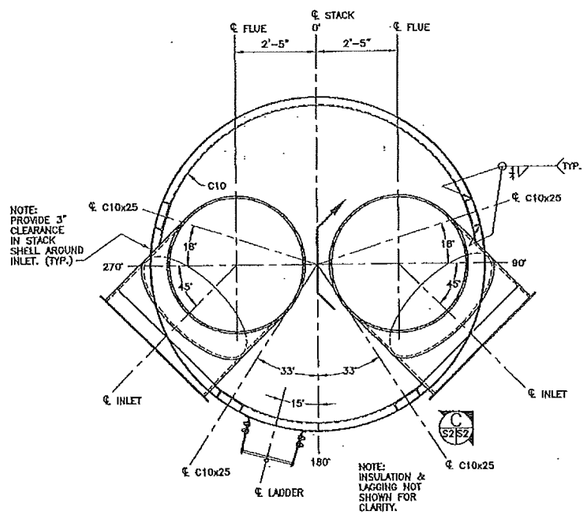

SECTION A
SCALE: 1/2" = 1'-0"
S1 S2

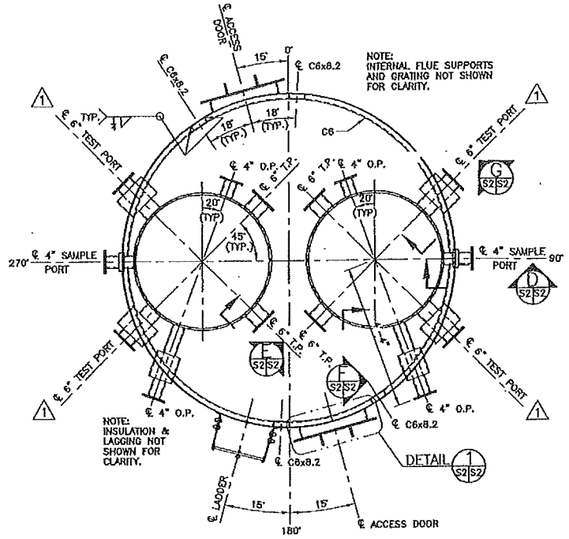

SECTION B
SCALE: 1/2" = 1'-0"
S1 S2

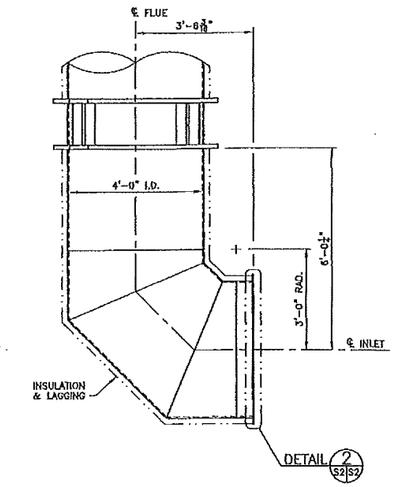

SECTION C
SCALE: 1/2" = 1'-0"
S2 S2

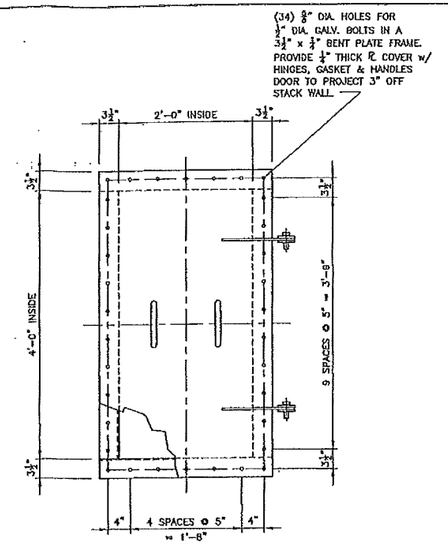

(TYPICAL 2 PLACES)
DETAIL 1 S2 S2
SCALE: 1" = 1'-0"

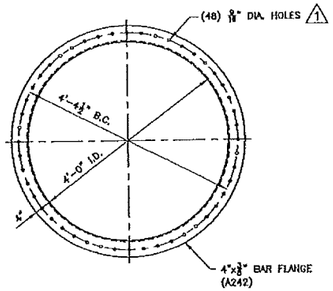

(TYPICAL 2 PLACES)
DETAIL 2 S2 S2
SCALE: 1" = 1'-0"

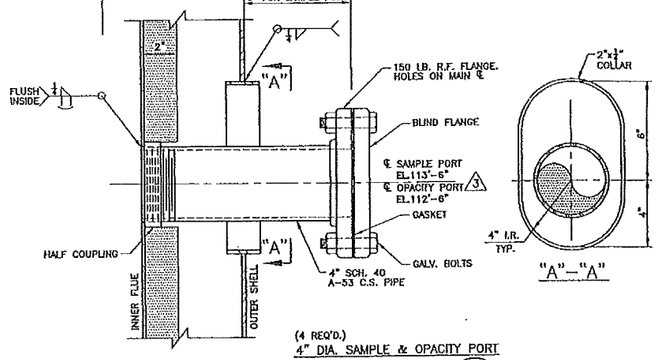

(4 REQ'D.)
4" DIA. SAMPLE & OPACITY PORT
SECTION D S2 S2
SCALE: 3" = 1'-0"

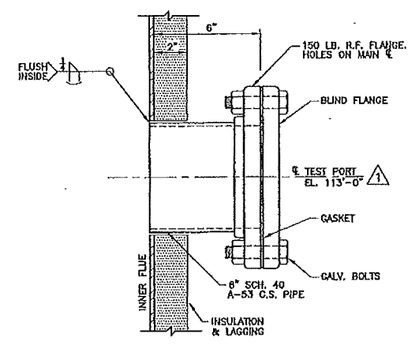

(4 REQ'D.)
6" DIA. TEST PORT
SECTION E S2 S2
SCALE: 3" = 1'-0"

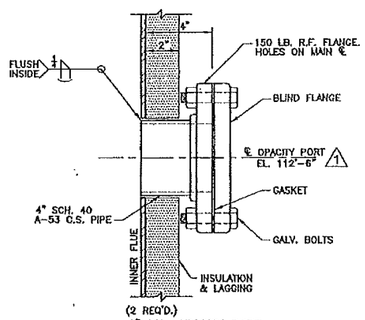

(2 REQ'D.)
4" DIA. OPACITY PORT
SECTION F S2 S2
SCALE: 3" = 1'-0"

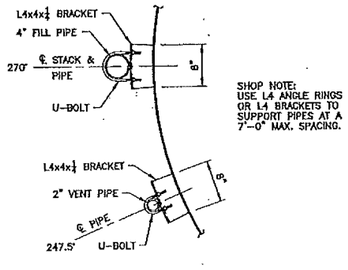

SHOP NOTE: USE L4 ANGLE RINGS OR L4 BRACKETS TO SUPPORT PIPES AT A 7'-0" MAX. SPACING.

DETAIL 3 S1 S2 1
SCALE: 1" = 1'-0"

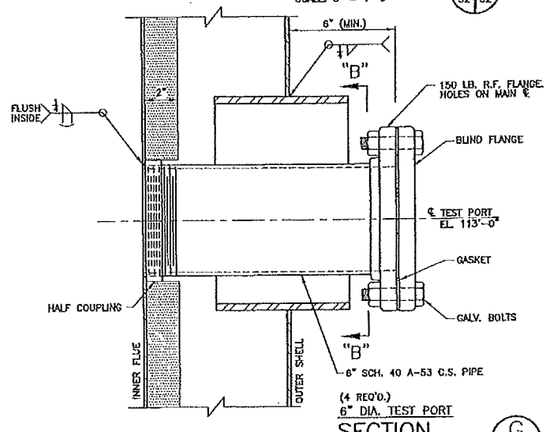

(4 REQ'D.)
6" DIA. TEST PORT
SECTION G S2 S2 1
SCALE: 3" = 1'-0"

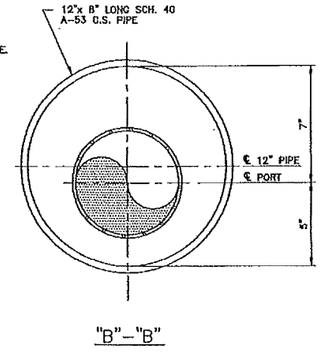

"B"-"B"

COMMONWEALTH OF VIRGINIA
RICHARD SCOTT SLAY
No. 0402 038084
2/10/03
PROFESSIONAL ENGINEER

BARLOW ENGINEERING
[ ] APPROVED [ ] APPROVED AS NOTED
[ ] NOT APPROVED [✓] ACCEPTED AS CERTIFIED
THIS DRAWING HAS BEEN CHECKED FOR GENERAL CONFORMANCE WITH THE DESIGN CONCEPT OF THE PROJECT AND THE INFORMATION GIVEN IN THE PURCHASE ORDER. THE SUPPLIER IS FULLY RESPONSIBLE FOR THE ENGINEERING DESIGN, FABRICATION, AND DIMENSIONAL ACCURACY OF THE EQUIPMENT. THE SUPPLIER IS ALSO RESPONSIBLE FOR THE MATERIALS AND SERVICES PROVIDED BY SUB-SUPPLIERS. THE ACTION SHOWN ABOVE DOES NOT RELIEVE THE SUPPLIER OF THIS RESPONSIBILITY.
DATE 2/12/03 BY

DOC CONTROL
FEB 19 2003
RECEIVED

CERTIFIED FOR CONSTRUCTION

NO.	DATE	REVISION	MADE	CHK'D.
3	02-17-03	RAISED SAMPLE PORTS	KHK	RSA
2	02-04-03	ROTATED OPACITY PORTS	KHK	RSA
1	12-13-02	PORTS, FLANGE, PIPE SUPPORT	JAB	RSA

HARRISONBURG RESOURCE RECOVERY FACILITY
BPI P.O. # 60150012
BPI TAG #: OFG-STK001
BPI FILE #: S220
BPI CONTRACT #: 6015
HARRISONBURG VIRGINIA

INLETS & TEST PORT DETAILS

WARREN ENVIRONMENT, INC.
5075 ROSWELL ROAD ATLANTA, GA 30342

DRAWN:	MADE	CHK'D.	DESIGN:	MADE	CHK'D.	DATE: 10-30-02
	JAB					SCALE: AS SHOWN

CUSTOMER DWG. NO.
WARREN DWG. NO. D02-49-S2-3

SCALE: 1"=1'-0" DATE: 10-30-02 CAD FILE: 02-49-2

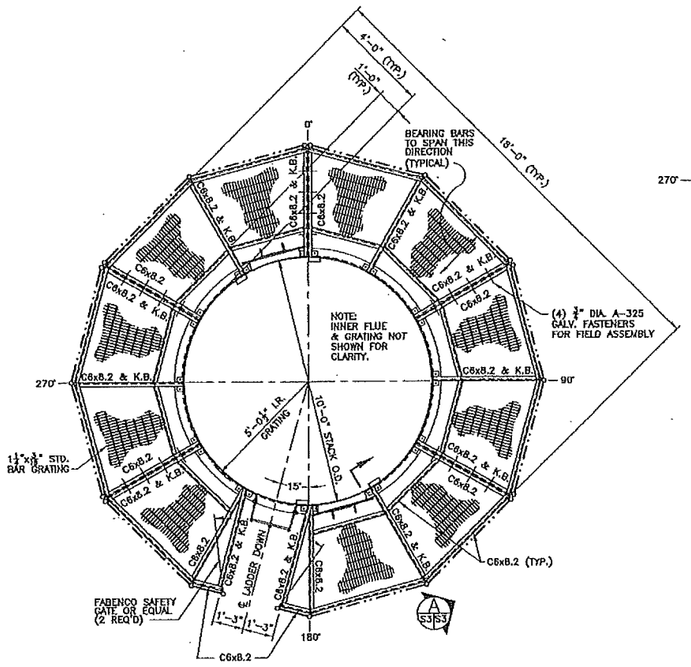

PLAN OF PLATFORM @ EL. 107'-9"

SCALE: ½" = 1'-0"

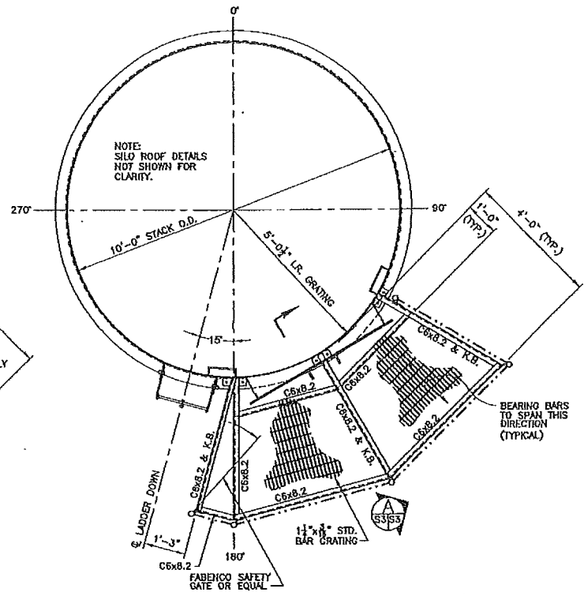

PLAN OF PLATFORM @ EL. 107'-9"

SCALE: ½" = 1'-0"

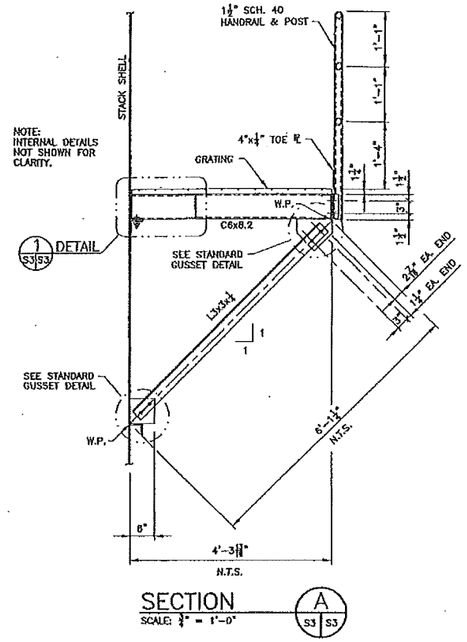

SECTION A

SCALE: ¾" = 1'-0" — S3 | S3

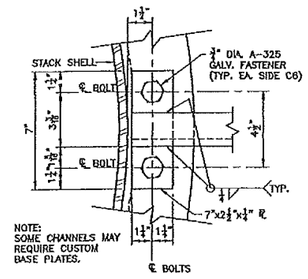

VIEW A-A

SCALE: 3"=1'-0"

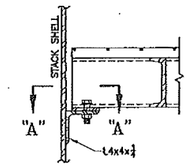

DETAIL 1

SCALE: 1½" = 1'-0" — S3 | S3

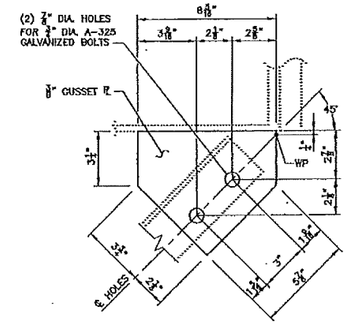

TYP. 45° K.B. GUSSET @ PLATFORM

SCALE: 3"=1'-0"

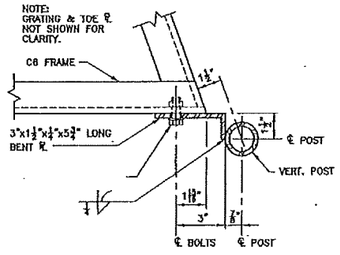

PLATFORM CORNER POST DETAIL

SCALE: 3"=1'-0"

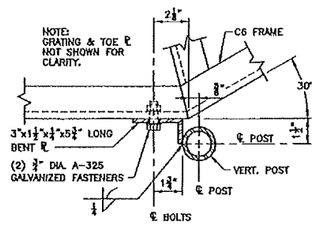

TYP. 30° CORNER POST DETAIL

SCALE: 3"=1'-0"

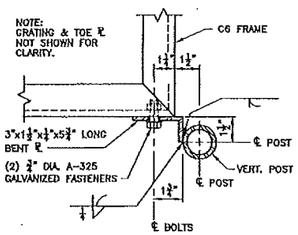

TYP. 90° CORNER POST DETAIL

SCALE: 3"=1'-0"

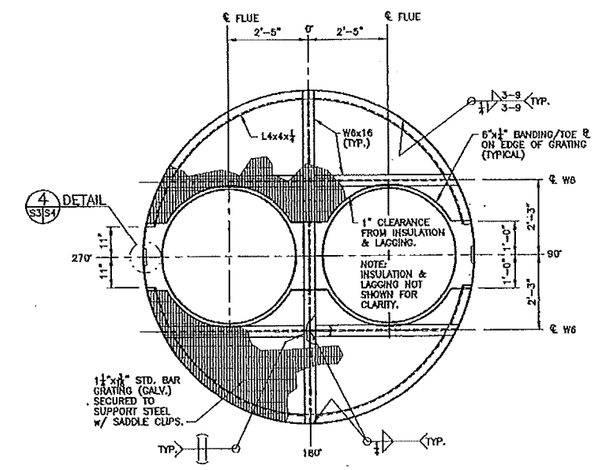

PLAN OF INTERNAL PLATFORM @ EL. 107'-9"

SCALE: ½" = 1'-0"

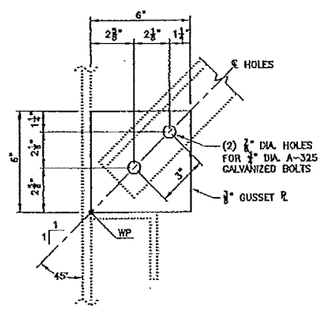

TYP. 45° K.B. GUSSET @ STACK

SCALE: 3"=1'-0"

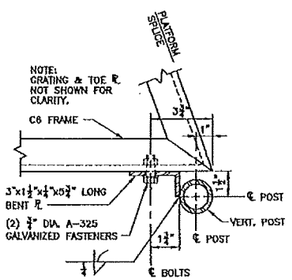

PLATFORM SPLICE POST DETAIL

SCALE: 3"=1'-0"

DOC CONTROL FILE # S220

DEC 2 0 2002

RECEIVED

COMMONWEALTH OF VIRGINIA — RICHARD SCOTT SLAY — No. 0402 038084 — 12/19/02 — PROFESSIONAL ENGINEER

BARLOW ENGINEERING

[ ] APPROVED [ ] APPROVED AS NOTED

[ ] NOT APPROVED [✓] ACCEPTED AS CERTIFIED

THIS DRAWING HAS BEEN CHECKED FOR GENERAL COMPLIANCE WITH THE DESIGN CONCEPT OF THE PROJECT AND THE INFORMATION GIVEN IN THE PURCHASE ORDER. THE SUPPLIER IS FULLY RESPONSIBLE FOR THE ENGINEERING DESIGN, FABRICATION, AND DIMENSIONAL ACCURACY OF THE EQUIPMENT. THE SUPPLIER IS ALSO RESPONSIBLE FOR THE MATERIALS AND SERVICES PROVIDED BY SUB-SUPPLIERS. THE ACTION SHOWN ABOVE DOES NOT RELIEVE THE SUPPLIER OF THIS RESPONSIBILITY.

DATE 12/23/02 BY

CERTIFIED FOR CONSTRUCTION

HARRISONBURG RESOURCE RECOVERY FACILITY
BPI P.O. #: 60150012
BPI TAG #: OFG-STK001
BPI FILE #: S220
BPI CONTRACT #: 6015

HARRISONBURG — VIRGINIA

PLATFORM DETAILS

WARREN ENVIRONMENT, INC.

5075 ROSWELL ROAD — ATLANTA, GA 30342

DRAWN:	MADE	CHK'D.	DESIGN:	MADE	CHK'D.	DATE:	10-29-02
	JAB					SCALE:	AS SHOWN

CUSTOMER DWG. NO. — WARREN DWG. NO. D02-49-S3-1

NO.	DATE	REVISION	MADE	CHK'D.
1	12-19-02	CERTIFIED FOR CONSTRUCTION	KHK	RSA

SCALE: ½"=1'-0" DATE: 10-25-02 CAD FILE: 02-49-3

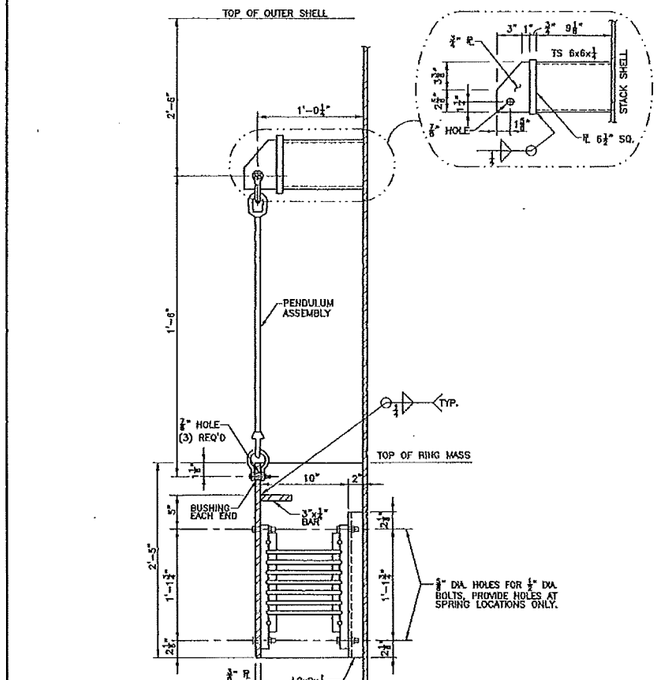

PENDULUM WEIGHT = 1500 LBS
NATURAL FREQUENCY OF STACK = 1.715 CPS
USE 9 SPRINGS WITH 8-10" DIA. COILS

COMBINED SECTIONS (B&C) S4 | S4
N.T.S.

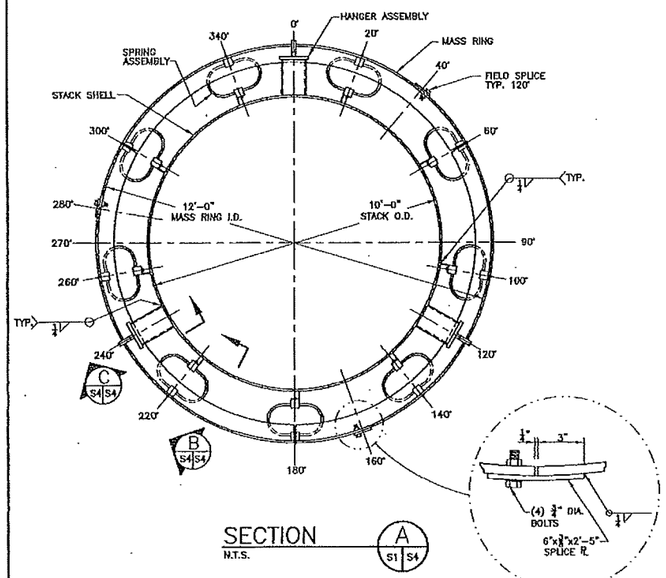

SECTION (A) S1 | S4
N.T.S.

TUNED MASS DAMPER

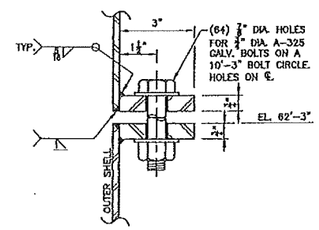

FIELD SPLICE DETAIL (1) S1 | S4
SCALE: N.T.S.

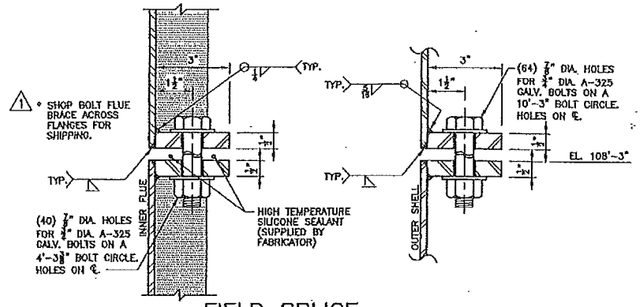

FIELD SPLICE DETAIL (2) S1 | S4
SCALE: N.T.S.

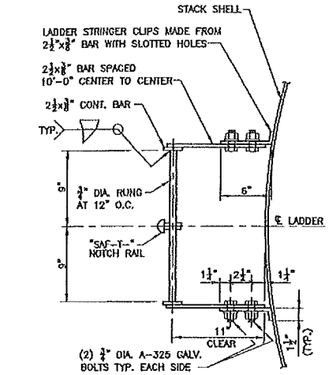

NOTE:
TOP RUNG @ EL. 111'-9"
BOT. RUNG @ EL. 14'-9"
INCLUDE SUPPLY OF
(2) DISMOUNT SECTIONS
(2) HARNESSES
(2) SLEEVES
1

LADDER DETAIL w/ SAF-T-RAIL (3) S1 | S4
SCALE: 1½"=1'-0"

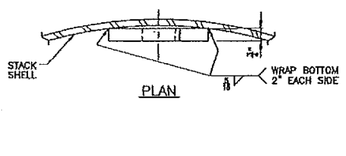

PLAN

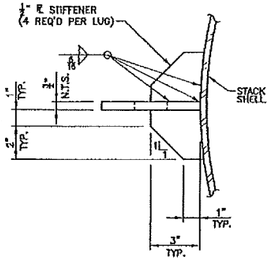

PLAN

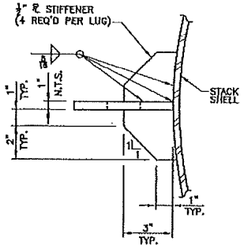

PLAN

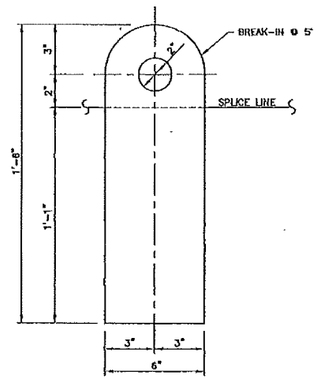

NOTE:
(2) LUGS @ 90° & 270° FOR SECTION #2.

ELEVATION

LIFTING LUG DETAIL (4) S3 | S4
SCALE: 3" = 1'-0"

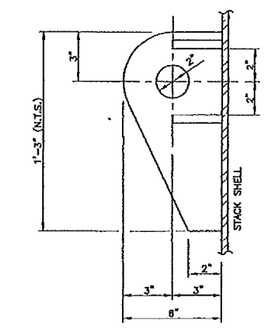

NOTE:
(2) LUGS @ 90° & 270° FOR SECTION #1 & #3.

ELEVATION

LIFTING LUG DETAIL (5) S1 | S4
SCALE: 3" = 1'-0"

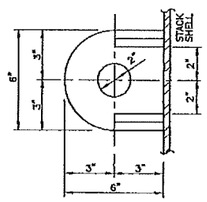

NOTE:
(1) LUG REQ'D @ 0° FOR EACH SECTION EXCEPT SECTION #1. USE ANCHOR CHAIR FOR SECTION #1.

ELEVATION

TAILING LUG DETAIL (6) S1 | S4
SCALE: 3" = 1'-0"

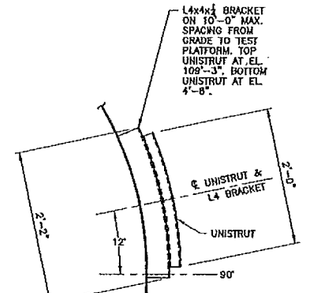

UNISTRUT DETAIL (7) S1 | S4
SCALE: 1" = 1'-0"
1

DOC CONTROL
DEC 2 0 2002
RECEIVED
FILE # S220

BARLOW ENGINEERING
[ ] APPROVED [ ] APPROVED AS NOTED
[ ] NOT APPROVED [✓] ACCEPTED AS CERTIFIED
THIS DRAWING HAS BEEN CHECKED FOR GENERAL COMPLIANCE WITH THE DESIGN CONCEPT OF THE PROJECT AND THE INFORMATION GIVEN IN THE PURCHASE ORDER. THE SUPPLIER IS FULLY RESPONSIBLE FOR THE ENGINEERING DESIGN, FABRICATION, AND DIMENSIONAL ACCURACY OF THE EQUIPMENT. THE SUPPLIER IS ALSO RESPONSIBLE FOR THE MATERIALS AND SERVICES PROVIDED BY SUB-SUPPLIERS. THE ACTION SHOWN ABOVE DOES NOT RELIEVE THE SUPPLIER OF THIS RESPONSIBILITY.
DATE 12/23/02 BY

COMMONWEALTH OF VIRGINIA
RICHARD SCOTT SLAY
No. 0402 038084
PROFESSIONAL ENGINEER
12/19/02

CERTIFIED FOR CONSTRUCTION

NO.	DATE	REVISION	MADE	CHK'D.
1	12-19-02	CHANGED BOTTOM OF LADDER		RSA

HARRISONBURG RESOURCE RECOVERY FACILITY
BPI P.O. # 60150012
BPI TAG #: OFG-STK001
BPI FILE #: S220
BPI CONTRACT #: 6015
HARRISONBURG VIRGINIA

T.M.D. & MISC. DETAILS

WARREN ENVIRONMENT, INC.
6075 ROSWELL ROAD ATLANTA, GA 30342

DRAWN:	MADE	CHK'D.	DESIGN:	MADE	CHK'D.	DATE:	10-30-02
JAB						SCALE:	AS SHOWN

CUSTOMER DWG. NO.
WARREN DWG. NO. D02-49-S4-1

SCALE: 1"=1'-0" DATE: MM-DD-YY CAD FILE: 02-XX-X

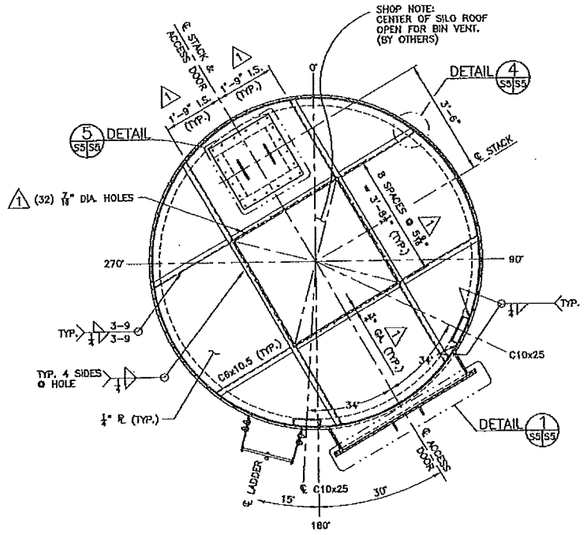

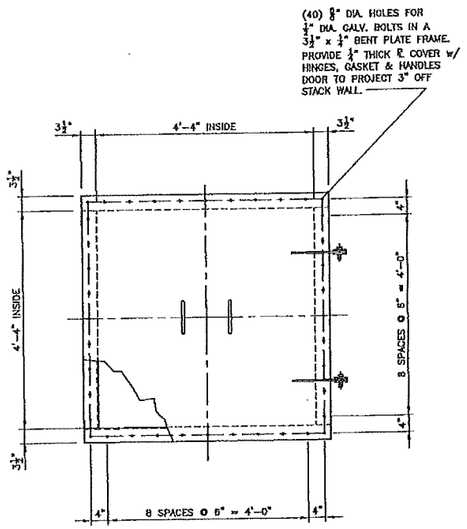

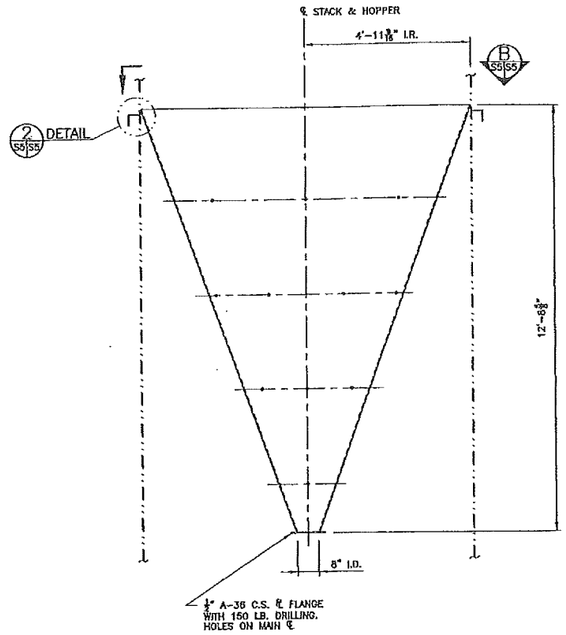

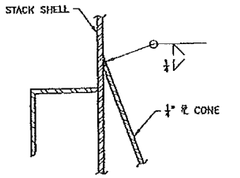

DETAIL 2 (S5 | S5)
SCALE: 3" = 1'-0"

SECTION A (S1 | S5)
SCALE: 1/2" = 1'-0"

DETAIL 1 (S5 | S5)
SCALE: 1/2" = 1'-0"

SILO HOPPER ELEVATION ⚠1
SCALE: 1/2" = 1'-0"

⚠1 REMOVED DETAIL 3

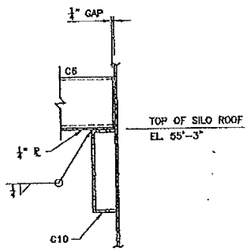

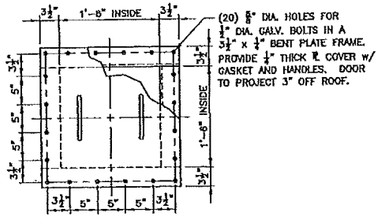

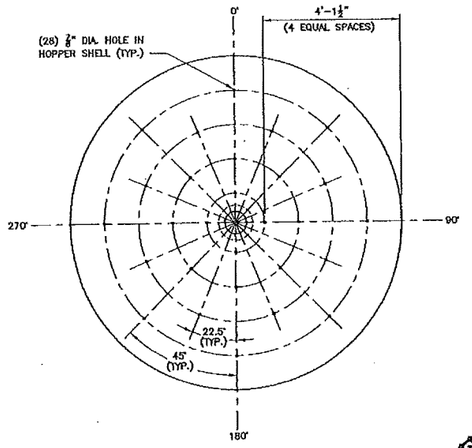

DETAIL 4 (S5 | S5)
SCALE: 1 1/2" = 1'-0"

DETAIL 5 (S5 | S5)
SCALE: 1" = 1'-0"

SECTION B (S5 | S5) ⚠1
SCALE: 1/2" = 1'-0"

⚠1 REMOVED DETAIL 6

BARLOW ENGINEERING
[ ] APPROVED [ ] APPROVED AS NOTED
[ ] NOT APPROVED [X] ACCEPTED AS CERTIFIED

THIS DRAWING HAS BEEN CHECKED FOR GENERAL CONFORMANCE WITH THE DESIGN CONCEPT OF THE PROJECT AND THE INFORMATION GIVEN IN THE PURCHASE ORDER. THE SUPPLIER IS FULLY RESPONSIBLE FOR THE ENGINEERING DESIGN, FABRICATION, AND DIMENSIONAL ACCURACY OF THE EQUIPMENT. THE SUPPLIER IS ALSO RESPONSIBLE FOR THE MATERIALS AND SERVICES PROVIDED BY SUB-SUPPLIERS. THE ACTION SHOWN ABOVE DOES NOT RELIEVE THE SUPPLIER OF THIS RESPONSIBILITY.

DATE 12/20/02 BY: [signature]

FILE # S220
DOC CONTROL
DEC 20 2002
RECEIVED

COMMONWEALTH OF VIRGINIA
RICHARD SCOTT SLAY
No. 0402 038084
PROFESSIONAL ENGINEER
12/19/02

CERTIFIED FOR CONSTRUCTION

NO.	DATE	REVISION	MADE	CHK'D.
1	12-26-02	GENERAL REVISIONS	JAB	

HARRISONBURG RESOURCE RECOVERY FACILITY
BPI P.O. # 60150012
BPI TAG #: OFG-STK001
BPI FILE #: S220
BPI CONTRACT #: 6015
HARRISONBURG VIRGINIA

SILO DETAILS

WARREN ENVIRONMENT, INC.
5075 ROSWELL ROAD ATLANTA, GA 30342

DRAWN:	MADE	CHK'D.	DESIGN:	MADE	CHK'D.	DATE: 10-30-02
	JAB					SCALE: AS SHOWN

CUSTOMER DWG. NO.
WARREN DWG. NO. D02-49-S5-1

SCALE: 1/4"=1'-0"
DATE: 10-31-02
CAD FILE: 02-49-5

SHOP NOTE:
SET INNER FLUES TO HANG 1'-0" BELOW OUTER SHELL DURING SHIPMENT AND ERECTION. BOLT ANGLE FRAME ACROSS FLUES AND TO OUTER SHELL TO SECURE FLUES DURING SHIPMENT AND ERECTION.

FIELD NOTE:
REMOVE BOLT-IN INNER FLUE BRACING AFTER THE TOP SECTION IS IN VERTICAL POSITION.

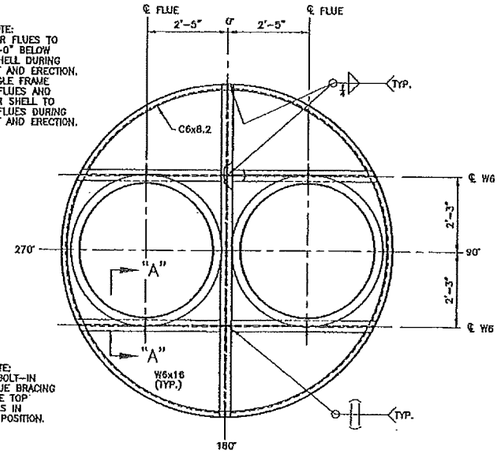

SECTION
SCALE: 1/2" = 1'-0"
A
S1 | S6

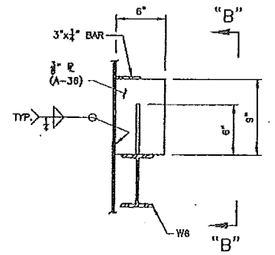

* VIEW SHOWN w/ FLUE REMOVED 12"

VIEW "A-A"
SCALE: 1 1/2" = 1'-0"

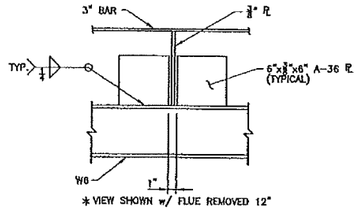

* VIEW SHOWN w/ FLUE REMOVED 12"

VIEW "B-B"
SCALE: 1 1/2" = 1'-0"

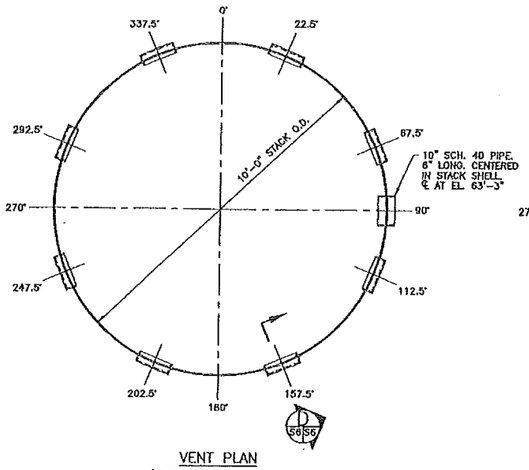

VENT PLAN
(TYP. 2 ELEVATIONS)

SECTION
SCALE: 1/2" = 1'-0"
B
S1 | S6

NOTE:
TRIM 5" BARS & GUSSETS TO FIT.

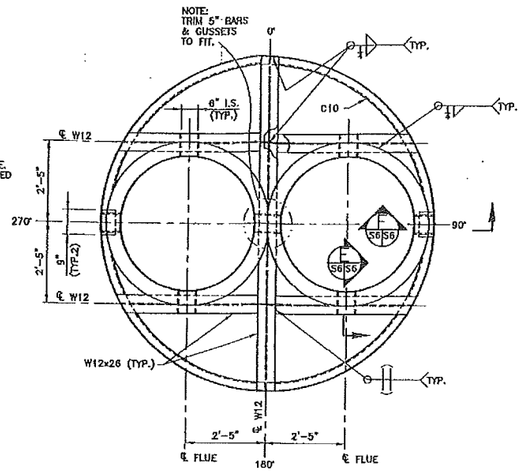

SECTION
SCALE: 1/2" = 1'-0"
C
S1 | S6

10'-1" O.D. TOP CAP

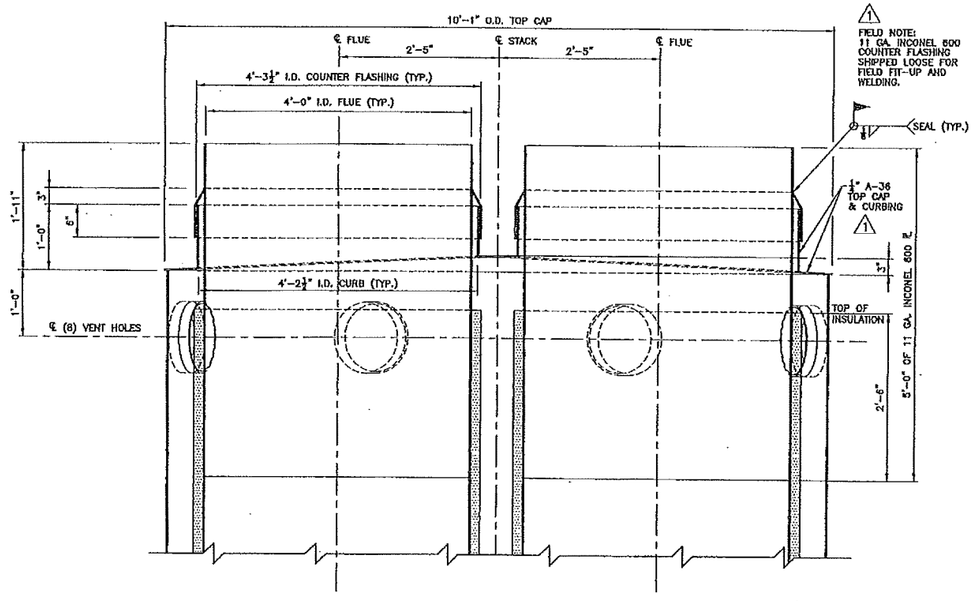

FIELD NOTE:
11 GA. INCONEL 600 COUNTER FLASHING SHIPPED LOOSE FOR FIELD FIT-UP AND WELDING.

DETAIL
SCALE: 1" = 1'-0"
1
S1 | S6

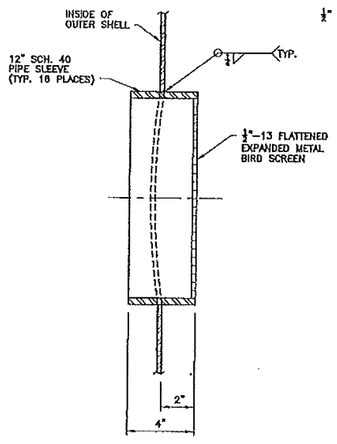

SECTION
SCALE: 3" = 1'-0"
D
S6 | S6

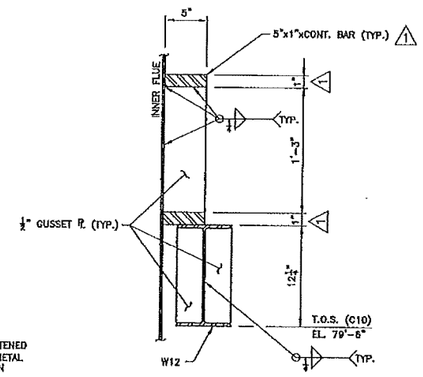

SECTION
SCALE: 1 1/2" = 1'-0"
E
S6 | S6

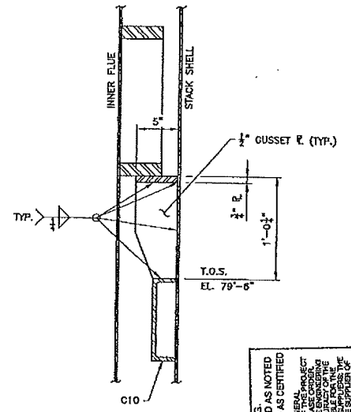

SECTION
SCALE: 1 1/2" = 1'-0"
F
S6 | S6

COMMONWEALTH OF VIRGINIA
RICHARD SCOTT SLAY
No. 0402 038084
12/11/02
PROFESSIONAL ENGINEER

FILE # S220
DOC CONTROL
DEC 2 0 2002
RECEIVED

BARLOW ENGINEERING
[ ] APPROVED
[ ] APPROVED AS NOTED
[ ] NOT APPROVED
[X] ACCEPTED AS CERTIFIED
THIS DRAWING HAS BEEN CHECKED FOR GENERAL CONFORMANCE WITH THE DESIGN CONCEPT OF THE PROJECT AND THE INFORMATION GIVEN IN THE PURCHASE CONTRACT. THIS APPROVAL DOES NOT RELIEVE THE SUPPLIER OF THE RESPONSIBILITY FOR FABRICATION AND DIMENSIONAL ACCURACY OF THE EQUIPMENT AND SHIPMENT OF ALL PARTS REQUIRED FOR THE COMPLETE AND SATISFACTORY OPERATION OF THE EQUIPMENT AS SPECIFIED. THE REVIEW AND APPROVAL GIVEN BY BARLOW ENGINEERING TO THE SHOP DRAWINGS DOES NOT RELIEVE THE SUPPLIER OF THE RESPONSIBILITY OF ANY DEVIATIONS.
DATE: 12/16/02 BY:

CERTIFIED FOR CONSTRUCTION

NO.	DATE	REVISION	MADE	CHK'D.
1	12-19-02	GEN. REVISIONS / C.F.C.	JAB	

HARRISONBURG RESOURCE RECOVERY FACILITY
BPI P.O. # 60150012
BPI TAG #: OFG-STK001
BPI FILE #: S220
BPI CONTRACT #: 6015
HARRISONBURG VIRGINIA

FLUE SUPPORT, GUIDE, TOP CAP & DETAILS

WARREN ENVIRONMENT, INC.
5075 ROSWELL ROAD ATLANTA, GA 30342

DRAWN:	MADE	CHK'D.	DESIGN:	MADE	CHK'D.
	JAB				

DATE: 11-05-02
SCALE: AS SHOWN
CUSTOMER DWG. NO.
WARREN DWG. NO. D02-49-S6-1

SCALE: 3/4"=1'-0"
DATE: 11-05-02
CAD FILE: 02-49-